WTC
DRAWING BOOK 9
AB 1–1 — AB 18–2

WTC LERA Book Box 4A

↓

Box 04A

↓

Book 9 1-of-2

296

SKILLING, HELLE, CHRISTIANSEN, ROBERTSON — Structural & Civil Engineers

PROJECT THE WORLD TRADE CENTER | TITLE FLOOR 107 - P.H. CONTENTS | DATE 4-1-70

REVISIONS

1. 5-27-70
6-15-70

Drawing Book 9 contains all General Notes, Details and Schedules for Structural Steel from floor 108 core columns splice thru Penthouse Roof, Towers "A" & "B" except the Exterior Wall. For Exterior Wall, see Drawing Book 4.

CONTENTS

9-AB 0	Date Pages
9-AB 1	Index and General Notes
9-AB 2	Typical Details - Truss connections
9-AB 3	Typical Details - Shear studs
9-AB 4	Member Types - Built up
9-AB 5	Member Types - Rolled shapes
9-AB 6	Connection Details
9-AB 7	Horizontal Bracing
9-AB 8	Bridging and Deck Supports
9-AB 9	Louver Wall Support Details
9-AB 10	Strap Anchor Details
9-AB 11	Connection Details - Beam to Beam
9-AB 12	Column Splice Details
9-AB 13	Connection Details Floor 107
9-AB 14	Connection Details Exterior wall
9-AB 15	Connection Details Floor 108
9-AB 16	Connection Details Floor 110
9-AB 17	Connection Details P.H. Roof
9-AB 18	Connection Details lines 04 & 05
9-AB 19	Connection Details misc.
9-AB 20	Connection Details P.H Roof
9-AB 21	Connection Details Pipe Posts & misc.
9-AB 22	Connection Details Floor 109
9-AB 23	Connection Details - T.V. Mast Interface

LICENSED PROFESSIONAL ENGINEER — LESLIE E. ROBERTSON — No. 34360 — UNIVERSITY OF THE STATE OF NEW YORK

DESIGNED

DRAWN W. Clarke

REVIEWED E. Drakos

SKILLING, HELLE, CHRISTIANSEN, ROBERTSON — Structural & Civil Engineers

PROJECT: THE WORLD TRADE CENTER | TITLE: FL 107-PH DATE PAGE | DATE: 10/ 6/72

ISIONS

PRINTED 5/18/73

9-AB 0- 1.1	5/18/73	9-A6-5	11/9/73								
9-AB 0- 1.2	5/18/73	9-A6-6	11/9/73								
9-AB 1- 1.1	[illegible]	9-AB 6- 1	5/27/70	9-AB10- 4	9/15/70	9-AB13- 8.1	5/27/70	9-AB15-11.2	7/15/70		
9-AB 1- 1.2	1/04/71	9-AB 6- 2	7/08/70	9- B10- 5	12/14/70	9-AB13- 8.2	5/27/70	9-AB15-12	5/27/70		
9-AB 1- 1.3	1/04/71	9-AB 6- 3	7/08/70	9- B10- 6	12/14/70	9-AB13- 9.1	7/08/70	9-AB15-13.1	5/27/70		
9-AB 1- 1.4	1/04/71	9-AB 6- 4	6/17/70	9-AB10- 7	9/15/70	9-AB13- 9.2	7/08/70	9-AB15-13.2	5/27/70		
9-AB 1- 1.5	1/04/71	9-AB 7- 1	5/27/70	9-AB10- 8	9/15/70	9-AB13- 9.3	5/27/70	9-AB15-14	7/08/70		
9-AB 1- 1.6	1/04/71	9-AB 7- 2	5/27/70	9-AB10- 9	9/15/70	9-AB13- 9.4	5/27/70	9-AB15-15.1	7/08/70		
9-AB 1- 1.7	1/04/71	9-AB 7- 3	5/27/70	9-AB10-10	9/15/70	9-AB13- 9.5	7/15/70	9-AB15-15.2	7/15/70		
9-AB 1- 1.8	1/04/71	9-AB 7- 4	5/27/70	9-AB10-11	9/15/70	9-AB13- 9.6	5/27/70	9-AB15-15.3	7/15/70		
9-AB 1- 1.9	1/04/71	9-AB 7- 5	5/27/70	9-AB10-12	9/15/70	9-AB13- 9.7	6/17/70	9-AB15-16.1	5/27/70		
* 9-AB 1-1.10	1/04/71	9-AB 7- 6	5/27/70	9-AB10-13	9/15/70	9- B13- 9.8	8/03/70	9-AB15-16.2	5/27/70		
* 9-AB 1-1.11	1/04/71	9-AB 7- 7	5/27/70	9-AB10-14	12/14/70	9-AB13-10.1	7/08/70	9-AB15-17.1	5/27/70		
9-AB 1- 2.1	5/27/70	9-AB 7- 8	5/27/70	9- B10-16	12/14/70	9-AB13-10.2	7/08/70	9-AB15-17.2	5/27/70		
9-AB 1- 2.2	5/27/70	9-AB 7- 9	5/27/70	9- B10-17	12/14/70	9-AB13-10.3	5/27/70	9-AB15-18.1	7/08/70		
		9-AB 7-10	5/27/70	9- B10-18	12/14/70	9-AB13-10.4	5/27/70	9-AB15-18.2	5/27/70		
9-AB 2- 1.1	5/27/70	9-AB 7-11	7/08/70	9- B10-19	12/14/70	9-AB13-10.5	5/27/70	9-AB15-19	VOID		
9-AB 2- 1.2	5/27/70	9-AB 7-12	6/15/70	9-AB11- 2	5/27/70	9-AB14- 1	5/27/70	9-AB16- 1.1	12/14/70		
9-AB 2- 1.3	5/27/70	9-AB 7-13	6/15/70	9-AB11- 3	5/27/70	9-AB14- 2	7/08/70	9-AB16- 1.2	12/14/70		
9-AB 2- 2	5/27/70	9-AB 7-14	8/03/70	9-AB11- 4	6/17/70	9-AB14- 3	7/08/70	9-AB16- 1.3	6/15/70		
9-AB 2- 3	7/08/70	9- B 7-15.1	12/14/70	9-AB11- 5	5/27/70	9-AB14- 4	7/08/70	9-AB16- 1.4	12/14/70		
9-AB 2- 4.1	5/27/70	9- B 7-15.2	12/14/70	9-AB11- 6	5/27/70	9-AB14- 5.1	5/27/70	9-AB16- 2.1	6/15/70		
9-AB 2- 4.2	5/27/70			9-AB11- 7	12/14/70	9-AB14- 5.2	5/27/70	9-AB16- 2.2	6/15/70		
9-AB 2- 4.3	5/27/70	9-AB 8- 1	12/14/70	9-AB11- 8	12/14/70	9-AB14- 6	5/27/70	9- B16- 2.3	12/14/70		
9-AB 2- 5	6/15/70	9-AB 8- 2	5/27/70	9-AB11- 9.1	7/08/70	9-AB14- 7.1	5/27/70	9- B16- 2.4	12/14/70		
9-AB 2- 6.1	6/15/70	9-AB 8- 4	5/27/70	9-AB11- 9.2	7/08/70	9-AB14- 7.2	5/27/70	9-AB16- 3.1	6/15/70		
9-AB 2- 6.2	5/27/70	9-AB 8- 5.1	7/15/70			9-AB14- 8.1	6/03/70	9-AB16- 3.2	6/15/70		
9-AB 2- 7	5/27/70	9-AB8-5.1ALT	8/11/70	9-AB12- 1	5/27/70	9-AB14- 8.2	5/27/70	9-AB16- 3.3	6/15/70		
		9-AB 8- 5.2	6/15/70	9-AB12- 2	5/27/70	9- B14- 8.3	9/08/70	9- B16- 3.4	12/14/70		
9-AB 3- 1.1	10/20/70	9-AB8-5.2ALT	8/11/70	9-AB12- 3.1	12/14/70	9-AB14- 9.1	8/03/70	9- B16- 3.5	12/14/70		
9-AB 3- 1.2	10/20/70	9- B 8- 6	12/14/70	9- B12- 3.2	12/14/70	9-AB14- 9.2	12/14/70	9-AB16- 4.1	12/14/70		
9-AB 3- 1.3	10/20/70			9-AB12- 4	5/27/70	9-AB14- 9.3	12/14/70	9-AB16- 4.2	12/14/70		
9-AB 3- 1.4	12/14/70	9-AB 9- 1	2/ 5/71	9-AB13- 1	VOID	9- B14-10	6/03/70	9-AB16- 5.1	6/15/70		
9-AB 3- 2	9/15/70	9-A 9- 2.1	2/ 5/71	9-AB13- 2	VOID			9-AB16- 5.2	6/15/70		
9-AB 3- 3	9/15/70	9- B 9- 2.2	3/ 1/71	9-AB13- 3	VOID	9-AB15- 1.1	5/27/70	9- B16- 5.3	12/14/70		
9-AB 3- 4.1	9/15/70	9- B 9- 2.3	3/ 1/71	9-AB13- 4.1	5/27/70	9-AB15- 1.2	5/27/70	9-AB16- 6.1	12/14/70		
9-B 3- 4.2	9/15/70	9-AB 9- 3	2/ 5/71	9-AB13- 4.2	5/27/70	9-AB15- 2	5/27/70	9-AB16- 6.2	12/14/70		
		9-A 9- 4.1	2/ 5/71	9-AB13- 4.3	6/17/70	9-AB15- 3	7/13/70	9-AB16- 6.3	6/15/70		
9-AB 4- 1.1	7/13/70	9- B 9- 4.2	3/ 1/71	9-AB13- 4.4	6/17/70	9-AB15- 4	5/27/70	9-AB16- 6.4	6/15/70		
9-AB 4- 1.2	5/27/70	9- B 9- 4.3	3/ 1/71	9-AB13- 4.5	7/08/70	9-AB15- 5.1	8/03/70	9-AB16- 6.5	7/08/70		
9-AB 4- 2.1	12/21/70	9-AB 9- 5.1	2/ 5/71	9-AB13- 4.6	5/27/70	9-AB15- 5.2	5/27/70	9- B16- 6.6	12/14/70		
9-AB 4- 2.2	12/14/70	9-AB 9- 5.2	2/ 5/71	9- B13- 4.7	8/03/70	9- B15- 5.3	9/08/70	9- B16- 6.7	12/14/70		
9-AB 4- 3	5/27/70	9-AB 9- 6	6/15/70	9- B13- 4.8	8/03/70	9-AB15- 6	5/27/70	9-AB16- 7.1	12/14/70		
		9-AB 9- 7	7/08/70	9-AB13- 5.1	5/27/70	9-AB15- 7.1	5/27/70	9-AB16- 7.2	12/14/70		
9-AB 5- 1.1	7/08/70	9- B 9- 8	2/ 5/71	9-AB13- 5.2	7/08/70	9-AB15- 7.2	5/27/70	9-AB16- 7.3	12/14/70		
9-AB 5- 1.2	7/15/70	9- B 9- 9	3/ 1/71	9-AB13- 5.3	7/13/70	9-AB15- 7.3	VOID	9-AB16- 7.4	12/14/70		
9-AB 5- 2	12/14/70			9-AB13- 7.1	5/27/70	9-AB15- 8.1	5/27/70	9-AB16- 7.5	12/14/70		
9-AB 5- 3	7/08/70	9-AB10- 1	9/15/70	9-AB13- 7.2	5/27/70	9-AB15- 8.2	5/27/70	9-AB16- 7.6	12/14/70		
9- B 5- 4.1	12/14/70	9-AB10- 2	12/14/70	9-AB13- 7.3	5/27/70	9-AB15- 9	5/27/70	9-AB16- 8.1	6/15/70		
9- B 5- 4.2	12/14/70	9-AB10- 3	9/15/70	9-AB13- 7.4	5/27/70	9-AB15-10	5/27/70	9-AB16- 8.2	6/15/70		
						9-AB15-11.1	7/15/70	9-AB16- 8.3	6/15/70		

* = NO RECORD

9-AB C- 1.1

PROJECT	THE WORLD TRADE CENTER	TITLE	FL 107-PH DATE PAGE	DATE	10/ 6/72

REVISIONS

PRINTED 5/18/73

9-AB16- 9.1	6/15/70	9-AB13- 1.1	12/14/70	9-AB18- 5.7	7/10/70	9-AB20- 2	6/18/70	9-AB21- 2.2	5/27/70
9-AB16- 9.2	6/15/70	9-AB18- 1.2	12/14/70	9-AB18- 5.8	7/10/70	9-AB20- 3.1	6/18/70	9-AB21- 3.1	5/27/70
9-AB16-10	6/15/70	9-AB18- 1.3	12/14/70	9-AB18- 5.9	7/10/70	9-AB20- 3.2	6/18/70	9-AB21- 3.2	5/27/70
9-AB16-11	6/15/70	9-AB18- 1.4	12/14/70	9-AB18- 5.10	7/10/70	9-AB20- 3.3	6/18/70	9-AB21- 4	6/15/70
9-AB16-12	12/14/70	9-AB18- 1.5	12/14/70	9-AB18- 5.14	7/08/70	9-AB20- 4.1	10/ 4/71		
		9-AB18- 1.6	12/14/70	9-AB18- 5.15	7/08/70	9-AB20- 4.2	10/ 4/71	9-AB22- 1.1	6/15/70
9-AB17- 1.1	6/18/70	9-AB18- 1.7	12/14/70	9-AB18- 5.16	6/22/70	9-AB20- 4.3	10/ 4/71	9-AB22- 1.2	6/15/70
9-AB17- 1.2	6/18/70	9-AB18- 1.8	6/16/70	9-AB18- 5.17	6/22/70	9-AB20- 4.4	10/ 4/71	9-AB22- 2	6/15/70
9-AB17- 1.3	12/14/70	9-AB18- 1.9	7/08/70	9-AB18- 5.18	6/22/70	9-AB20- 4.5	10/ 4/71	9-AB22- 3	6/15/70
9-AB17- 1.4	12/14/70	9-AB18- 1.10	7/08/70	9-AB18- 5.19	6/22/70	9-AB20- 4.6	10/ 4/71	9-AB22- 4.1	6/15/70
9-AB17- 1.5	12/14/70	9-AB18- 1.11	6/03/70	9-AB18- 5.20	VOID	9-AB20- 4.7	10/ 4/71	9-AB22- 4.2	6/15/70
9-AB17- 1.6	12/14/70	9-AB18- 1.12	5/27/70	9-AB18- 5.21	VOID	9-AB20- 4.8	8/20/70	9-AB22- 5.1	6/15/70
9-AB17- 2.1	6/13/70	9-AB18- 2.1	12/14/70	9-AB18-5.30	10/12/70	9-AB20- 4.9	8/20/70	9-AB22- 5.2	6/15/70
9-AB17- 2.2	12/14/70	9-AB18- 2.2	7/08/70	9-AB18-5.31	10/12/70	9-AB20- 4.10	10/ 4/71	9-AB22- 5.3	6/15/70
9-AB17- 2.3	12/14/70	9-AB18- 2.3	7/08/70	9-AB18- 6.1	12/14/70	9-AB20- 4.11	10/ 4/71	9-AB22- 5.4	6/15/70
9-AB17- 3.1	7/10/70	9-AB18- 2.4	8/03/70	9-AB18- 6.2	10/12/70	9-AB20- 4.12	7/ 9/71		
9-AB17- 3.2	7/10/70	9-AB18- 2.5	5/27/70	9-AB18- 6.3	10/12/70	9-AB20- 4.13	7/ 9/71	9-AB23- 1	12/21/70
9-AB17- 3.3	7/10/70	9-AB18- 2.6	6/16/70	9-AB18- 6.4	10/12/70	9-AB20- 5	7/08/70		
9-AB17- 3.4	7/10/70	9-AB18- 2.7	12/14/70	9-AB18- 6.5	7/10/70	9-AB20- 6	6/15/70		
9-AB17- 3.5	12/14/70	9-AB18- 3.1	7/09/70	9-AB18- 6.6	7/10/70	9-AB20- 7.1	8/20/70		
9-AB17- 3.6	12/14/70	9-AB18- 3.2	7/10/70	9-AB18- 6.7	7/10/70	9-AB20- 7.2	8/20/70		
9-AB17- 3.7	12/14/70	9-AB18- 3.3	7/10/70	9-AB18- 6.8	7/10/70	9-AB20- 7.3	8/20/70		
9-AB17- 3.8	12/14/70	9-AB18- 3.4	7/10/70	9-AB18- 6.9	7/10/70	9-AB20- 7.4	8/20/70		
9-AB17- 4.1	7/10/70	9-AB18- 3.5	7/09/70	9-AB18- 6.14	7/08/70	9-AB20- 7.5	12/21/70		
9-AB17- 4.2	7/10/70	9-AB18- 3.7	7/09/70	9-AB18- 6.15	7/08/70	9-AB20- 8.1	6/16/70		
9-AB17- 4.3	7/10/70	9-AB18- 3.8	7/09/70	9-AB18- 6.16	6/22/70	9-AB20- 8.2	6/15/70		
9-AB17- 4.4	12/14/70	9-AB18- 3.9	7/06/70	9-AB18- 6.17	6/22/70	9-AB20- 9.1	7/08/70		
9-AB17- 4.5	12/14/70	9-AB18- 3.10	7/06/70	9-AB18- 6.18	6/22/70	9-AB20- 9.2	7/08/70		
9-AB17- 4.6	12/14/70	9-AB18- 3.11	7/09/70	9-AB18- 6.19	6/22/70	9-AB20- 9.3	9/27/71		
9-AB17- 5.1	7/13/70	9-AB18- 3.12	7/08/70	9-AB18-6.30	10/12/70	9-AB20-10	8/20/70		
9-AB17- 5.2	7/13/70	9-AB18- 3.13	7/06/70	9-AB18-6.31	10/12/70	9-AB20-11	VOID		
9-AB17- 5.3	6/18/70	9-AB18- 3.14	7/08/70			9-AB20-12.1	10/ 4/71		
9-AB17- 5.4	7/13/70	9-AB18- 3.15	7/08/70	9-AB19- 1.1	7/15/70	9-AB20-12.2	10/ 4/71		
9-AB17- 6.1	6/18/70	9-AB18- 4.1	7/09/70	9-AB19- 1.2	5/27/70	9-AB20-12.3	12/21/70		
9-AB17- 6.2	7/13/70	9-AB18- 4.2	7/09/70	9-AB19- 1.3	5/27/70	9-AB20-13.1	12/21/70		
9-AB17- 7.1	10/12/70	9-AB18- 4.3	7/09/70	9-AB19- 1.4	7/15/70	9-AB20-13.2	12/21/70		
9-AB17- 7.2	10/12/70	9-AB18- 4.4	7/09/70	9-AB19- 1.5	5/27/70	9-AB20-14.1	12/21/70		
9-AB17- 7.3	10/12/70	9-AB18- 4.5	7/06/70	9-AB19- 1.6	5/27/70	9-AB20-14.2	12/21/70		
9-AB17- 7.4	10/12/70	9-AB18- 4.7	7/08/70	9-AB19- 2.1	7/15/70	9-AB20-14.3	12/21/70		
9-AB17- 7.5	10/12/70	9-AB18- 4.8	6/22/70	9-AB19- 2.2	7/15/70	9-AB20-15.1	12/21/70		
9-AB17- 7.6	10/12/70	9-AB18- 4.9	7/15/70	9-AB19- 2.3	5/27/70	9-AB20-15.2	3/ 5/71		
9-AB17- 7.7	10/12/70	9-AB18- 4.10	7/15/70	9-AB19- 3	6/15/70	9-AB20-15.3	12/21/70		
9-AB17- 7.8	10/12/70	9-AB18- 4.11	7/08/70	9-AB19- 4	6/15/70	9-AB20-16	12/21/70		
9-AB17- 7.9	12/14/70	9-AB18- 4.12	7/08/70	9-AB19- 5	6/15/70	9-AB20-17.1	12/21/70		
9-AB17-7.10	12/14/70	9-AB18- 5.1	12/14/70	9-AB19- 6	6/15/70	9-AB20-17.2	12/21/70		
9-AB17-7.11	12/14/70	9-AB18- 5.2	10/12/70	9-AB19- 7.1	6/15/70	9-AB20-18	3/ 5/71		
9-AB17- 9	VOID	9-AB18- 5.3	10/12/70	9-AB19- 7.2	6/15/70				
9-AB17-10.1	7/10/70	9-AB18- 5.4	7/10/70			9-AB21- 1.1	5/27/70		
9-AB17-10.2	7/10/70	9-AB18- 5.5	7/10/70	9-AB20- 1.1	6/16/70	9-AB21- 1.2	6/15/70		
		9-AB18- 5.6	7/10/70	9-AB20- 1.2	6/18/70	9-AB21- 2.1	5/27/70		

LICENSED PROFESSIONAL ENGINEER LESLIE E. ROBERTSON No. 34360 THE STATE OF NEW YORK

9-AB C- 1.2

SKILLING, HELLE, CHRISTIANSEN, ROBERTSON — Structural & Civil Engineers

PROJECT: THE WORLD TRADE CENTER | TITLE: FL 107-PH INDEX | DATE: 5/27/70

REVISIONS
6/15/70
8/3/70
8/11/70
9/15/70

9-AB 6- 1	FL 107-PH CONNECTION DETAILS
9-AB 6- 2	FL 107-PH CONNECTION DETAILS
9-AB 6- 3	FL 107-PH CONNECTION DETAILS
9-AB 6- 4	FL 107-PH CONNECTION DETAILS
9-AB 7- 1	FL 107-PH HORIZONTAL BRACING
9-AB 7- 2	FL 107-PH HORIZONTAL BRACING
9-AB 7- 3	FL 107-PH HORIZONTAL BRACING
9-AB 7- 4	FL 107-PH HORIZONTAL BRACING
9-AB 7- 5	FL 107-PH HORIZONTAL BRACING
9-AB 7- 6	FL 107-PH HORIZONTAL BRACING
9-AB 7- 7	FL 107-PH HORIZONTAL BRACING
9-AB 7- 8	FL 107-PH DECK SUPPORT DETAILS
9-AB 7- 9	FL 107-PH HORIZONTAL BRACING
9-AB 7- 10	FL 107-PH HORIZONTAL BRACING
9-AB 7- 11	FL 107-PH HORIZONTAL BRACING
9-AB 7- 12	FL 107-PH HORIZONTAL BRACING
9-AB 7- 13	FL 107-PH HORIZONTAL BRACING
9- B 7- 14	FL 107-PH HORIZONTAL BRACING
9- B 7- 15.1	FL 107-PH HORIZONTAL BRACING
9-AB 8- 1	FL 107-PH DECK BEAMS & BRIDGING
9-AB 8- 2	FL 107-PH DECK BEAMS & BRIDGING
9-AB 8- 3	NOT USED
9-AB 8- 4	FL 107-PH DECK BEAMS & BRIDGING
9-AB 8- 5.1	FL 107-PH DECK BEAMS & BRIDGING
9-AB 8- 5.1	FL 107-PH DECK BEAMS & BRIDGING - ALTERNATE
9-AB 8- 5.2	FL 107-PH DECK BEAMS & BRIDGING
9-AB 8- 5.2	FL 107-PH DECK BEAMS & BRIDGING - ALTERNATE
9-AB 9- 1	FL 107-PH LOUVER WALL SUPPORT
9-AB 9- 2	FL 107-PH LOUVER WALL SUPPORT
9-AB 9- 3	FL 107-PH LOUVER WALL SUPPORT
9-AB 9- 4	FL 107-PH LOUVER WALL SUPPORT
9-AB 9- 5.1	FL 107-PH LOUVER WALL SUPPORT
9-AB 9- 5.2	FL 107-PH LOUVER WALL SUPPORT
9-AB 9- 6	FL 107-PH LOUVER WALL SUPPORT
9-AB 9- 7	FL 107-PH LOUVER WALL SUPPORT
9-AB10- 1	FL 107-PH STRAP ANCHOR GENERAL NOTES
9-AB10- 2	FL 107-PH STRAP ANCHOR DETAILS - FLOOR 107
9-AB10- 3	FL 107-PH STRAP ANCHOR DETAILS - FLOOR 108
9-AB10- 4	FL 107-PH STRAP ANCHOR DETAILS - FLOOR 109
9-AB10- 5	FL 107-PH STRAP ANCHOR DETAILS
9-AB10- 6	FL 107-PH STRAP ANCHOR DETAILS
9-AB10- 7	FL 107-PH STRAP ANCHOR DETAILS
9-AB10- 8	FL 107-PH STRAP ANCHOR DETAILS
9-AB10- 9	FL 107-PH STRAP ANCHOR DETAILS
9-AB10- 10	FL 107-PH STRAP ANCHOR DETAILS
9-AB10- 11	FL 107-PH STRAP ANCHOR DETAILS
9-AB10- 12	FL 107-PH STRAP ANCHOR DETAILS
9-AB10- 13	FL 107-PH STRAP ANCHOR DETAILS
9-AB10- 14	FL 107-PH STRAP ANCHOR DETAILS
9-AB10- 15	FL 107-PH STRAP ANCHOR DETAILS

SKILLING, HELLE, CHRISTIANSEN, ROBERTSON — Structural & Civil Engineers

PROJECT	TITLE	DATE
THE WORLD TRADE CENTER	FL 107-PH. INDEX	5/27/70

REVISIONS
6/15/70
6/17/70
8/3/70

9-AB11- 1 NOT USED
9-AB11- 2 FL 107-PH CONNECTION DETAILS - BEAM TO BEAM
9-AB11- 3 FL 107-PH CONNECTION DETAILS - BEAM TO BEAM
9-AB11- 4 FL 107-PH CONNECTION DETAILS - BEAM TO BEAM
9-AB11- 5 FL 107-PH CONNECTION DETAILS - BEAM TO BEAM
9-AB11- 6 FL 107-PH CONNECTION DETAILS - BEAM TO BEAM
9-AB11- 7 FL 107-PH CONNECTION DETAILS - BEAM TO BEAM
9-AB11- 8 FL 107-PH CONNECTION DETAILS - BEAM TO BEAM
9-AB11- 9.1 FL 107-PH CONNECTION DETAILS - BEAM TO BEAM
9-AB11- 9.2 FL 107-PH CONNECTION DETAILS - BEAM TO BEAM

9-AB12- 1 FL 107-PH COLUMN SPLICE DETAILS
9-AB12- 2 FL 107-PH COLUMN SPLICE DETAILS
9-AB12- 3 FL 107-PH COLUMN BASE DETAILS
9-AB12- 4 FL 107-PH TYPICAL CAP & BASE PLATE DETAILS

9-AB13- 1 VOID
9-AB13- 2 VOID
9-AB13- 3 VOID
9-AB13- 4.1 FL 107-PH CONNECTION DETAILS - FLOOR 107
9-AB13- 4.2 FL 107-PH CONNECTION DETAILS - FLOOR 107
9-AB13- 4.3 FL 107-PH CONNECTION DETAILS - FLOOR 107
9-AB13- 4.4 FL 107-PH CONNECTION DETAILS - FLOOR 107
9-AB13- 4.5 FL 107-PH CONNECTION DETAILS - FLOOR 107
9-AB13- 4.6 FL 107-PH CONNECTION DETAILS - FLOOR 107
9-AB13- 4.7 FL 107-PH CONNECTION DETAILS - FLOOR 107
9-AB13- 4.8 FL 107-PH CONNECTION DETAILS - FLOOR 107
9-AB13- 5.1 FL 107-PH CONNECTION DETAILS - FLOOR 107
9-AB13- 5.2 FL 107-PH CONNECTION DETAILS - FLOOR 107
9-AB13- 5.3 FL 107-PH CONNECTION DETAILS - FLOOR 107
9-AB13- 6 NOT USED
9-AB13- 7.1 FL 107-PH CONNECTION DETAILS - FLOOR 107
9-AB13- 7.2 FL 107-PH CONNECTION DETAILS - FLOOR 107
9-AB13- 7.3 FL 107-PH CONNECTION DETAILS - FLOOR 107
9-AB13- 7.4 FL 107-PH CONNECTION DETAILS - FLOOR 107
9-AB13- 8.1 FL 107-PH CONNECTION DETAILS - FLOOR 107
9-AB13- 8.2 FL 107-PH CONNECTION DETAILS - FLOOR 107
9-AB13- 9.1 FL 107-PH CONNECTION DETAILS - FLOOR 107
9-AB13- 9.2 FL 107-PH CONNECTION DETAILS - FLOOR 107
9-AB13- 9.3 FL 107-PH CONNECTION DETAILS - FLOOR 107
9-AB13- 9.4 FL 107-PH CONNECTION DETAILS - FLOOR 107
9-AB13- 9.5 FL 107-PH CONNECTION DETAILS - FLOOR 107
9-AB13- 9.6 FL 107-PH CONNECTION DETAILS - FLOOR 107
9-AB13- 9.7 FL 107-PH CONNECTION DETAILS - FLOOR 107
9-AB13- 9.8 FL 107-PH CONNECTION DETAILS - FLOOR 107
9-AB13- 10.1 FL 107-PH CONNECTION DETAILS - FLOOR 107
9-AB13- 10.2 FL 107-PH CONNECTION DETAILS - FLOOR 107
9-AB13- 10.3 FL 107-PH CONNECTION DETAILS - FLOOR 107
9-AB13- 10.4 FL 107-PH CONNECTION DETAILS - FLOOR 107
9-AB13- 10.5 FL 107-PH CONNECTION DETAILS - FLOOR 107

SKILLING, HELLE, CHRISTIANSEN, ROBERTSON — Structural & Civil Engineers

PROJECT	TITLE	DATE
THE WORLD TRADE CENTER	FL 107-PH INDEX	5/27/70

REVISIONS

8/3/70

9-A814- 1 FL 107-PH CONNECTION DETAILS - EXTERIOR WALL
9-A814- 2 FL 107-PH CONNECTION DETAILS - EXTERIOR WALL - FLOOR 107
9-A814- 3 FL 107-PH CONNECTION DETAILS - EXTERIOR WALL - FLOOR 107
9-A814- 4 FL 107-PH CONNECTION DETAILS - EXTERIOR WALL - FLOOR 107
9-A814- 5.1 FL 107-PH CONNECTION DETAILS - EXTERIOR WALL - FLOOR 108
9-A814- 5.2 FL 107-PH CONNECTION DETAILS - EXTERIOR WALL - FLOOR 108
9-A814- 6 FL 107-PH CONNECTION DETAILS - EXTERIOR WALL - FLOOR 108
9-A814- 7.1 FL 107-PH CONNECTION DETAILS - EXTERIOR WALL - FLOOR 108
9-A814- 7.2 FL 107-PH CONNECTION DETAILS - EXTERIOR WALL - FLOOR 108
9-A814- 8.1 FL 107-PH CONNECTION DETAILS - EXTERIOR WALL - FLOOR 108
9-A814- 8.2 FL 107-PH CONNECTION DETAILS - EXTERIOR WALL - FLOOR 108
9-A814- 8.3 FL 107-PH CONNECTION DETAILS - EXTERIOR WALL - FLOOR 108
9-A814- 9.1 FL 107-PH CONNECTION DETAILS - EXTERIOR WALL - FLOOR 110
9-A814- 9.2 FL 107-PH CONNECTION DETAILS - EXTERIOR WALL - FLOOR 110
9-A814- 10 FL 107-PH CONNECTION DETAILS - EXTERIOR WALL - FLOOR 107

9-A815- 1.1 FL 107-PH CONNECTION DETAILS - FLOOR 108
9-A815- 1.2 FL 107-PH CONNECTION DETAILS - FLOOR 108
9-A815- 4 FL 107-PH CONNECTION DETAILS - FLOOR 108
9-A815- 5 FL 107-PH CONNECTION DETAILS - FLOOR 108
9-A815- 6 FL 107-PH CONNECTION DETAILS - FLOOR 108
9-A815- 8.1 FL 107-PH CONNECTION DETAILS - FLOOR 108
9-A815- 8.2 FL 107-PH CONNECTION DETAILS - FLOOR 108
9-A815- 9.1 FL 107-PH CONNECTION DETAILS - FLOOR 108
9-A815- 9.2 FL 107-PH CONNECTION DETAILS - FLOOR 108
9-A815- 9.3 FL 107-PH CONNECTION DETAILS - FLOOR 108
9-A815- 10.1 FL 107-PH CONNECTION DETAILS - FLOOR 108
9-A815- 10.2 FL 107-PH CONNECTION DETAILS - FLOOR 108
9-A815- 11 FL 107-PH CONNECTION DETAILS - FLOOR 108
9-A815- 11.1 FL 107-PH CONNECTION DETAILS - FLOOR 108
9-A815- 11.2 FL 107-PH CONNECTION DETAILS - FLOOR 108
9-A815- 12 FL 107-PH CONNECTION DETAILS - FLOOR 108
9-A815- 13.1 FL 107-PH CONNECTION DETAILS - FLOOR 108
9-A815- 13.2 FL 107-PH CONNECTION DETAILS - FLOOR 108
9-A815- 14 FL 107-PH CONNECTION DETAILS - FLOOR 108
9-A815- 15.1 FL 107-PH CONNECTION DETAILS - FLOOR 108
9-A815- 15.2 FL 107-PH CONNECTION DETAILS - FLOOR 108
9-A815- 16.1 FL 107-PH CONNECTION DETAILS - FLOOR 108
9-A815- 16.2 FL 107-PH CONNECTION DETAILS - FLOOR 108
9-A815- 17.1 FL 107-PH CONNECTION DETAILS - FLOOR 108
9-A815- 17.2 FL 107-PH CONNECTION DETAILS - FLOOR 108
9-A815- 18.1 FL 107-PH CONNECTION DETAILS - FLOOR 108
9-A815- 18.2 FL 107-PH CONNECTION DETAILS - FLOOR 108
9-A815- 19 Auto

9-AP 1- 1.5

SKILLING, HELLE, CHRISTIANSEN, ROBERTSON — Structural & Civil Engineers

PROJECT	TITLE	DATE
THE WORLD TRADE CENTER	FL 107-PH INDEX	5/27/70

REVISIONS
6/18/70

9-AB16-	1.1	FL 107-PH CONNECTION DETAILS - FLOOR 110
9-AB16-	1.2	FL 107-PH CONNECTION DETAILS - FLOOR 110
9-AB16-	1.3	FL 107-PH CONNECTION DETAILS - FLOOR 110
9-AB16-	1.4	FL 107-PH CONNECTION DETAILS - FLOOR 110
9-AB16-	2.1	FL 107-PH CONNECTION DETAILS - FLOOR 110
9-AB16-	2.2	FL 107-PH CONNECTION DETAILS - FLOOR 110
9-AB16-	3.1	FL 107-PH CONNECTION DETAILS - FLOOR 110
9-AB16-	3.2	FL 107-PH CONNECTION DETAILS - FLOOR 110
9-AB16-	3.3	FL 107-PH CONNECTION DETAILS - FLOOR 110
9-AB16-	4.1	FL 107-PH CONNECTION DETAILS - FLOOR 110
9-AB16-	4.2	FL 107-PH CONNECTION DETAILS - FLOOR 110
9-AB16-	5.1	FL 107-PH CONNECTION DETAILS - FLOOR 110
9-AB16-	5.2	FL 107-PH CONNECTION DETAILS - FLOOR 110
9-AB16-	6.1	FL 107-PH CONNECTION DETAILS - FLOOR 110
9-AB16-	6.2	FL 107-PH CONNECTION DETAILS - FLOOR 110
9-AB16-	6.3	FL 107-PH CONNECTION DETAILS - FLOOR 110
9-AB16-	6.4	FL 107-PH CONNECTION DETAILS - FLOOR 110
9-AB16-	6.5	FL 107-PH CONNECTION DETAILS - FLOOR 110
9-AB16-	7.1	FL 107-PH CONNECTION DETAILS - FLOOR 110
9-AB16-	7.2	FL 107-PH CONNECTION DETAILS - FLOOR 110
9-AB16-	7.3	FL 107-PH CONNECTION DETAILS - FLOOR 110
9-AB16-	7.4	FL 107-PH CONNECTION DETAILS - FLOOR 110
9-AB16-	7.5	FL 107-PH CONNECTION DETAILS - FLOOR 110
9-AB16-	7.6	FL 107-PH CONNECTION DETAILS - FLOOR 110
9-AB16-	8.1	FL 107-PH CONNECTION DETAILS - FLOOR 110
9-AB16-	8.2	FL 107-PH CONNECTION DETAILS - FLOOR 110
9-AB16-	8.3	FL 107-PH CONNECTION DETAILS - FLOOR 110
9-AB16-	9.1	FL 107-PH CONNECTION DETAILS - FLOOR 110
9-AB16-	9.2	FL 107-PH CONNECTION DETAILS - FLOOR 110
9-AB16-	10	FL 107-PH CONNECTION DETAILS - FLOOR 110
9-AB16-	11	FL 107-PH CONNECTION DETAILS - FLOOR 110
9-AB16-	12	FL 107-PH CONNECTION DETAILS - FLOOR 110
9-AB17-	1.1	FL 107-PH CONNECTION DETAILS - PH ROOF
9-AB17-	1.2	FL 107-PH CONNECTION DETAILS - PH ROOF
9-AB17-	2	FL 107-PH CONNECTION DETAILS - PH ROOF
9-AB17-	3.1	FL 107-PH CONNECTION DETAILS - PH ROOF
9-AB17-	3.2	FL 107-PH CONNECTION DETAILS - PH ROOF
9-AB17-	3.3	FL 107-PH CONNECTION DETAILS - PH ROOF
9-AB17-	3.4	FL 107-PH CONNECTION DETAILS - PH ROOF
9-AB17-	4.1	FL 107-PH CONNECTION DETAILS - PH ROOF
9-AB17-	4.2	FL 107-PH CONNECTION DETAILS - PH ROOF
9-AB17-	4.3	FL 107-PH CONNECTION DETAILS - PH ROOF
9-AB17-	5.1	FL 107-PH CONNECTION DETAILS - PH ROOF
9-AB17-	5.2	FL 107-PH CONNECTION DETAILS - PH ROOF
9-AB17-	5.3	FL 107-PH CONNECTION DETAILS - PH ROOF
9-AB17-	5.4	FL 107-PH CONNECTION DETAILS - PH ROOF
9-AB17-	6.1	FL 107-PH CONNECTION DETAILS - PH ROOF
9-AB17-	6.2	FL 107-PH CONNECTION DETAILS - PH ROOF

SKILLING, HELLE, CHRISTIANSEN, ROBERTSON — Structural & Civil Engineers

PROJECT: THE WORLD TRADE CENTER | TITLE: FL 107-PH INDEX | DATE: 5/27/70

REVISIONS
8/18/70
11/3/70
2/19/70
VOID 4/25/70
10/12/70

9-A 17-	7.1	FL 107-PH CONNECTION DETAILS - PH ROOF
9-A 17-	7.2	FL 107-PH CONNECTION DETAILS - PH ROOF
9-A 17-	7.3	FL 107-PH CONNECTION DETAILS - PH ROOF
9-A 17-	7.4	FL 107-PH CONNECTION DETAILS - PH ROOF
9-A 17-	7.5	FL 107-PH CONNECTION DETAILS - PH ROOF
9-A 17-	7.6	FL 107-PH CONNECTION DETAILS - PH ROOF
9-A 17-	7.7	FL 107-PH CONNECTION DETAILS - PH ROOF
9-A 17-	7.8	FL 107-PH CONNECTION DETAILS - PH ROOF
9- B17-	7.10	FL 107-PH CONNECTION DETAILS - PH ROOF
9- B17-	7.11	FL 107-PH CONNECTION DETAILS - PH ROOF
9- B17-	7.12	FL 107-PH CONNECTION DETAILS - PH ROOF
9-AB17-	8	NOT USED
9-AB17-	9	VOID
9-AB17-	10.1	FL 107-PH CONNECTION DETAILS - PH ROOF
9-AB17-	10.2	FL 107-PH CONNECTION DETAILS - PH ROOF
9-AB18-	1.1	FL 107-PH CONNECTION DETAILS - LINES 04 & 05
9-AB18-	1.2	FL 107-PH CONNECTION DETAILS - LINES 04 & 05
9-AB18-	1.3	FL 107-PH CONNECTION DETAILS - LINES 04 & 05
9-AB18-	1.4	FL 107-PH CONNECTION DETAILS - LINES 04 & 05
9-AB18-	1.5	FL 107-PH CONNECTION DETAILS - LINES 04 & 05
9-AB18-	1.6	FL 107-PH CONNECTION DETAILS - LINES 04 & 05
9-AB18-	1.7	FL 107-PH CONNECTION DETAILS - LINES 04 & 05
9-AB18-	1.8	FL 107-PH CONNECTION DETAILS - LINES 04 & 05
9-AB18-	1.9	FL 107-PH CONNECTION DETAILS - LINES 04 & 05
9-AB18-	1.10	FL 107-PH CONNECTION DETAILS - LINES 04 & 05
9-AB18-	1.11	FL 107-PH CONNECTION DETAILS - LINES 04 & 05
9-AB18-	1.12	FL 107-PH CONNECTION DETAILS - LINES 04 & 05
9-AB18-	2.1	FL 107-PH CONNECTION DETAILS - LINES 04 & 05
9-AB18-	2.2	FL 107-PH CONNECTION DETAILS - LINES 04 & 05
9-AB18-	2.3	FL 107-PH CONNECTION DETAILS - LINES 04 & 05
9-AB18-	2.4	FL 107-PH CONNECTION DETAILS - LINES 04 & 05
9-AB18-	2.5	FL 107-PH CONNECTION DETAILS - LINES 04 & 05
9-AB18-	2.6	FL 107-PH CONNECTION DETAILS - LINES 04 & 05
9-AB18-	2.7	FL 107-PH CONNECTION DETAILS - LINES 04 & 05
9-AB18-	3.1	FL 107-PH CONNECTION DETAILS - LINES 04 & 05
9-AB18-	3.2	FL 107-PH CONNECTION DETAILS - LINES 04 & 05
9-AB18-	3.3	FL 107-PH CONNECTION DETAILS - LINES 04 & 05
9-AB18-	3.4	FL 107-PH CONNECTION DETAILS - LINES 04 & 05
9-AB18-	3.5	NOT USED
9-AB18-	3.6	FL 107-PH CONNECTION DETAILS - LINES 04 & 05
9-AB18-	3.7	FL 107-PH CONNECTION DETAILS - LINES 04 & 05
9-AB18-	3.8	FL 107-PH CONNECTION DETAILS - LINES 04 & 05
9-AB18-	3.9	FL 107-PH CONNECTION DETAILS - LINES 04 & 05
9-AB18-	3.10	FL 107-PH CONNECTION DETAILS - LINES 04 & 05
9-AB18-	3.11	FL 107-PH CONNECTION DETAILS - LINES 04 & 05
9-AB18-	3.12	FL 107-PH CONNECTION DETAILS - LINES 04 & 05
9-AB18-	3.13	FL 107-PH CONNECTION DETAILS - LINES 04 & 05
9-AB18-	3.14	FL 107-PH CONNECTION DETAILS - LINES 04 & 05
9-AB18-	3.15	FL 107-PH CONNECTION DETAILS - LINES 04 & 05

SKILLING, HELLE, CHRISTIANSEN, ROBERTSON — Structural & Civil Engineers

PROJECT: THE WORLD TRADE CENTER | TITLE: FL 107-PH INDEX | DATE: 5/27/70

REVISIONS
6/15/70
7/8/70
7/10/70
VOID 9/25/70
10/12/70

9-AB18-	4.1	FL 107-PH CONNECTION DETAILS - LINES 04 & 05
9-AB18-	4.2	FL 107-PH CONNECTION DETAILS - LINES 04 & 05
9-AB18-	4.3	FL 107-PH CONNECTION DETAILS - LINES 04 & 05
9-AB18-	4.4	FL 107-PH CONNECTION DETAILS - LINES 04 & 05
9-AB18-	4.6	FL 107-PH CONNECTION DETAILS - LINES 04 & 05
9-AB18-	4.7	FL 107-PH CONNECTION DETAILS - LINES 04 & 05
9-AB18-	4.8	FL 107-PH CONNECTION DETAILS - LINES 04 & 05
9-AB18-	4.9	FL 107-PH CONNECTION DETAILS - LINES 04 & 05
9-AB18-	4.10	FL 107-PH CONNECTION DETAILS - LINES 04 & 05
9-AB18-	4.11	FL 107-PH CONNECTION DETAILS - LINES 04 & 05
9-AB18-	4.12	FL 107-PH CONNECTION DETAILS - LINES 04 & 05
9-AB18-	5.1	FL 107-PH CONNECTION DETAILS - LINES 04 & 05
9-A 18-	5.2	FL 107-PH CONNECTION DETAILS - LINES 04 & 05
9-A 18-	5.3	FL 107-PH CONNECTION DETAILS - LINES 04 & 05
9-AB18-	5.4	FL 107-PH CONNECTION DETAILS - LINES 04 & 05
9-AB18-	5.5	FL 107-PH CONNECTION DETAILS - LINES 04 & 05
9-AB18-	5.6	FL 107-PH CONNECTION DETAILS - LINES 04 & 05
9-AB18-	5.7	FL 107-PH CONNECTION DETAILS - LINES 04 & 05
9-AB18-	5.8	FL 107-PH CONNECTION DETAILS - LINES 04 & 05
9-AB18-	5.9	FL 107-PH CONNECTION DETAILS - LINES 04 & 05
9-AB18-	5.10	FL 107-PH CONNECTION DETAILS - LINES 04 & 05
9-AB18-	5.14	FL 107-PH CONNECTION DETAILS - LINES 04 & 05
9-AB18-	5.15	FL 107-PH CONNECTION DETAILS - LINES 04 & 05
9-AB18-	5.16	FL 107-PH CONNECTION DETAILS - LINES 04 & 05
9-AB18-	5.17	FL 107-PH CONNECTION DETAILS - LINES 04 & 05
9-AB18-	5.18	FL 107-PH CONNECTION DETAILS - LINES 04 & 05
9-AB18-	5.19	FL 107-PH CONNECTION DETAILS - LINES 04 & 05
9-AB18-	5.20	VOID
9-AB18-	5.21	VOID
9- B18-	5.30	FL 107-PH CONNECTION DETAILS - LINES 04 & 05
9- B18-	5.31	FL 107-PH CONNECTION DETAILS - LINES 04 & 05
9-AB18-	6.1	FL 107-PH CONNECTION DETAILS - LINES 04 & 05
9-A 18-	6.2	FL 107-PH CONNECTION DETAILS - LINES 04 & 05
9-A 18-	6.3	FL 107-PH CONNECTION DETAILS - LINES 04 & 05
9-A 18-	6.4	FL 107-PH CONNECTION DETAILS - LINES 04 & 05
9-AB18-	6.5	FL 107-PH CONNECTION DETAILS - LINES 04 & 05
9-AB18-	6.6	FL 107-PH CONNECTION DETAILS - LINES 04 & 05
9-AB18-	6.7	FL 107-PH CONNECTION DETAILS - LINES 04 & 05
9-AB18-	6.8	FL 107-PH CONNECTION DETAILS - LINES 04 & 05
9-AB18-	6.9	FL 107-PH CONNECTION DETAILS - LINES 04 & 05
9-AB18-	6.14	FL 107-PH CONNECTION DETAILS - LINES 04 & 05
9-AB18-	6.15	FL 107-PH CONNECTION DETAILS - LINES 04 & 05
9-AB18-	6.16	FL 107-PH CONNECTION DETAILS - LINES 04 & 05
9-AB18-	6.17	FL 107-PH CONNECTION DETAILS - LINES 04 & 05
9-AB18-	6.18	FL 107-PH CONNECTION DETAILS - LINES 04 & 05
9-AB18-	6.19	FL 107-PH CONNECTION DETAILS - LINES 04 & 05
9- B18-	6.30	FL 107-PH CONNECTION DETAILS - LINES 04 & 05
9- B18-	6.31	FL 107-PH CONNECTION DETAILS - LINES 04 & 05
9- B18-	6.32	FL 107-PH CONNECTION DETAILS - LINES 04 & 05

SKILLING, HELLE, CHRISTIANSEN, ROBERTSON — Structural & Civil Engineers

PROJECT THE WORLD TRADE CENTER | TITLE FL 107-PH INDEX | DATE 5/27/70

REVISIONS:
6/15/70
7/29/70
7/10/70
8/20/70
VOID 9/25/70
10/12/70

9-AB19-	1.1	FL 107-PH CONNECTION DETAILS - FLOOR 108
9-AB19-	1.2	FL 107-PH CONNECTION DETAILS - FLOOR 108
9-AB19-	1.3	FL 107-PH CONNECTION DETAILS - FLOOR 108
9-AB19-	1.4	FL 107-PH CONNECTION DETAILS - FLOOR 108
9-AB19-	2.1	FL 107-PH CONNECTION DETAILS - FLOOR 108
9-AB19-	2.2	FL 107-PH CONNECTION DETAILS - FLOOR 108
9-AB19-	3	FL 107-PH CONNECTION DETAILS - FLOOR 110
9-AB19-	4	FL 107-PH CONNECTION DETAILS - FLOOR 109
9-AB19-	5	FL 107-PH CONNECTION DETAILS
9-AB19-	6	FL 107-PH CONNECTION DETAILS
9-AB19-	7.1	FL 107-PH CONNECTION DETAILS - FLOOR 109
9-AB19-	7.2	FL 107-PH CONNECTION DETAILS - FLOOR 109
9-AB20-	1.1	FL 107-PH CONNECTION DETAILS - PH ROOF
9-AB20-	1.2	FL 107-PH CONNECTION DETAILS - PH ROOF
9-AB20-	2	FL 107-PH CONNECTION DETAILS - PH ROOF
9-AB20-	3.1	FL 107-PH CONNECTION DETAILS - PH ROOF
9-AB20-	3.2	FL 107-PH CONNECTION DETAILS - PH ROOF
9-AB20-	3.3	FL 107-PH CONNECTION DETAILS - PH ROOF
9-AB20-	4.1	FL 107-PH CONNECTION DETAILS - PH ROOF
9-AB20-	4.2	FL 107-PH CONNECTION DETAILS - PH ROOF
9-AB20-	4.3	FL 107-PH CONNECTION DETAILS - PH ROOF
9-AB20-	4.4	FL 107-PH CONNECTION DETAILS - PH ROOF
9-AB20-	4.5	FL 107-PH CONNECTION DETAILS - PH ROOF
9-AB20-	4.6	FL 107-PH CONNECTION DETAILS - PH ROOF
9-AB20-	4.7	FL 107-PH CONNECTION DETAILS - PH ROOF
9-AB20-	4.8	FL 107-PH CONNECTION DETAILS - PH ROOF
9-AB20-	4.9	FL 107-PH CONNECTION DETAILS - PH ROOF
9-AB20-	4.10	FL 107-PH CONNECTION DETAILS - PH ROOF
9-AB20-	4.11	FL 107-PH CONNECTION DETAILS - PH ROOF
9-AB20-	5	FL 107-PH CONNECTION DETAILS - PH ROOF
9-AB20-	6	FL 107-PH CONNECTION DETAILS - PH ROOF
9-AB20-	7.1	FL 107-PH CONNECTION DETAILS - PH ROOF
9-AB20-	7.2	FL 107-PH CONNECTION DETAILS - PH ROOF
9-AB20-	7.3	FL 107-PH CONNECTION DETAILS - PH ROOF
9-AB20-	7.4	FL 107-PH CONNECTION DETAILS - PH ROOF
9-AB20-	8.1	FL 107-PH CONNECTION DETAILS - PH ROOF
9-AB20-	8.2	FL 107-PH CONNECTION DETAILS - PH ROOF
9-AB20-	9.1	FL 107-PH CONNECTION DETAILS - PH ROOF
9-AB20-	9.2	FL 107-PH CONNECTION DETAILS - PH ROOF
9-AB20-	10	FL 107-PH CONNECTION DETAILS - PH ROOF
9-AB20-	11	VOID

SKILLING, HELLE, CHRISTIANSEN, ROBERTSON — Structural & Civil Engineers

PROJECT: THE WORLD TRADE CENTER | TITLE: FL 107-PH GENERAL NOTES | DATE: 4-1-70

REVISIONS

5-27-70 R

GENERAL NOTES

The following provisions apply to all Drawing Book 9 drawings, unless specifically shown as noted otherwise in Drawing Book 9 drawings or in the plans.

A. Dimensions

1. All beam reference center lines and column reference center lines are located in the plans.

2. Elevation of top of steel is shown in the plans. See Beam Types (9-AB4 & 9-AB5) for location on beam of reference top of steel.

3. Where a dimension is shown in the drawings from the centerline of a beam or column it shall be considered to be from the reference centerline of the beam or column. Where a dimension is shown from the face of a column it shall be considered to be from the theoretical face of the column. The theoretical face of the column is located from the reference centerline of the column by a distance equal to one half of the scheduled column width or depth.

B. Materials

1. All steel sections, plates, detail materials and other members shall be ASTM A36, unless specifically shown otherwise. Steel parts noted in the drawings as Fy 50, or in general Fy XX, refers to steel conforming to the ASTM specifications with yield point corresponding to 50 or XX.

2. Members indicated in the Drawings as "tube" are rectangular seamless structural tubing and shall conform to ASTM A501.

3. Studs shall be manufactured from AISI grade C1015, C1017 or C1020 steel conforming to the requirements of ASTM A108. All studs will be furnished & installed by KKE under Contract WTC-230.00.

C. Bolted Connections

1. All bolted connections shall be high strength friction type, except where specifically noted as A307.

2. All high strength bolts shall be ASTM A325, except where specifically noted in the drawings as ASTM A490.

3. A minimum of 2-3/4" Ø bolts shall be used at each member connected except where specifically noted in the Drawings.

4. All field bolts to be furnished under Contract WTC-234.00. Field bolt lists and summaries will be prepared by the PNYA's Steel Detailer.

D. Welded Connections

1. All manual welded electrodes shall be E70XX low hydrogen type.

2. All submerged arc welding shall be Grade SAW-2.

3. Studs shall be applied using a stud welding system providing a minimum current of 2000 amperes.

4. Where weld joint details are not designated prequalified by AWS, each welding procedure submitted for approval shall be accompanied by welding procedure qualification test certification and reports.

5. Where the symbols are shown in the drawings the fabricator shall provide a complete penetration weld. The fabricator may provide single or double bevel, V, U or J groove welds conforming to approved welding procedure specifications.

E. Connection Details

1. Where connection plate dimensions are not shown in the drawings, plate dimensions shall be determined by providing standard AISC edge distances with the indicated bolt spacing. Where bolt spacing is not shown use AISC spacing with 3" min.

2. Use standard gauge for all bolts in beams unless otherwise shown in the drawings, or approved by the Engineer.

3. The bolt pattern is the same for the top and bottom plates or both side plates of a connection unless otherwise shown in the drawings.

LICENSED PROFESSIONAL ENGINEER — LESLIE E. ROBERTSON — No. 34360 — UNIVERSITY OF THE STATE OF NEW YORK

DESIGNED

DRAWN

REVIEWED E. Draves

9-AB1-2.1

SKILLING, HELLE, CHRISTIANSEN, ROBERTSON — Structural & Civil Engineers

PROJECT: THE WORLD TRADE CENTER | TITLE: FL 107-PH GENERAL NOTES | DATE: 4-1-70

REVISIONS

5-27-70

F. Reference Drawings

1. See SA-115 thru SA-120 for Floor Framing Plans Tower A.

2. See SB-115 thru SB-120 for Floor Framing Plans Tower B.

3. See SA-401 thru SA-404 for Elevations of Columns and Bracing, Tower A.

4. See SB-401 thru SB-404 for Elevations of Columns and Bracing, Tower B.

5. See Drawing Book 3 for core column below the Fl. 106 splice.

6. See Drawing Book 4 chapter 4-A1, 4-B1 and 4-AB2 for panels and seat details at Fl. 107.

7. See Drawing Book 4 chapter 4-AB3 for columns, spandrels and connection details floor 107 to 110.

G. Miscellaneous

1. Specific details and notes shall prevail over general details and notes.

   Any conflict or apparent conflict between drawings and/or notes shall be submitted to the Engineer for his decision, before construction or preparation of shop drawings has begun.

2. Section/details indicated 3-10E means Section/Detail E in Drawing Book 9 page 9-AB3-10.

3. Page numbers in Drawing Book 9 which include more than one page are numbered 2.1, 2.2, 2.3, etc. Page numbers which include only one page are numbered 2 with no decimal. Where reference is made to page numbers with more than one page, the decimal portion of the page number is not included. Therefore, a section or detail indicated 3-2 may be on 9-AB3-2.1, 2.2, etc.

4. Studs are indicated on the plans thus: N90. See 9-AB3 for details.

4. Convention for Determining left and right ends of members.

   (a) All members except those on vertical axis of sheet have the end nearest to the left side of the sheet designated as left.

   (b) All members on vertical axis have the end nearest to the bottom of the sheet designated as left.

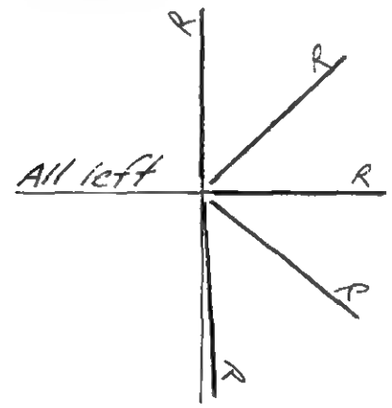

LICENSED PROFESSIONAL ENGINEER — LESLIE E. ROBERTSON — No 34360 — UNIVERSITY OF THE STATE OF NEW YORK

DESIGNED

DRAWN

REVIEWED E. Pavlos

9-AB1-2.2

SKILLING, HELLE, CHRISTIANSEN, ROBERTSON — Structural & Civil Engineers

PROJECT: THE WORLD TRADE CENTER | TITLE: FL 107-PH TYPICAL DETAILS-TRUSS CONNECTIONS | DATE: 4-1-70

REVISIONS

5-27-70

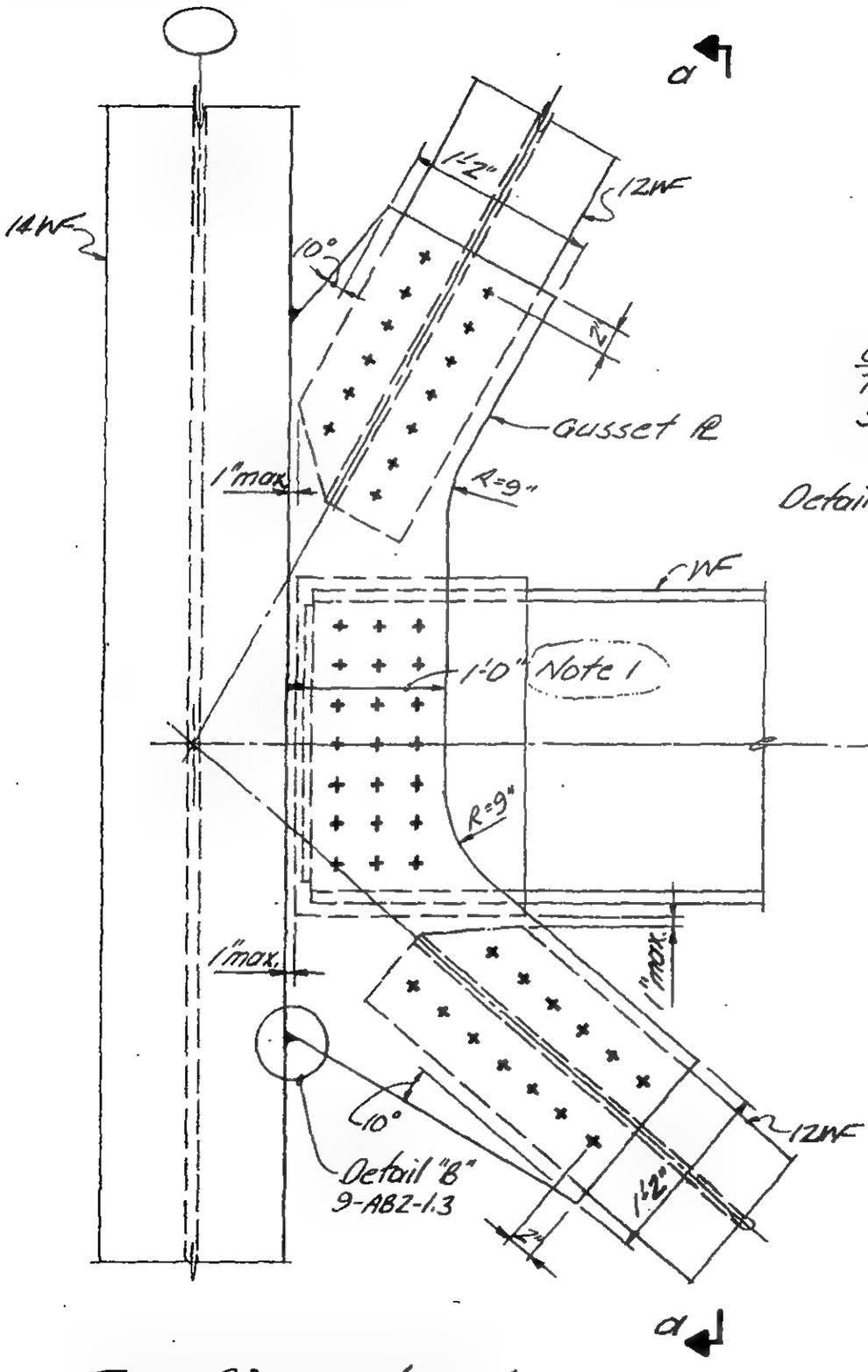

Two Diagonal and Beam to Column Connection

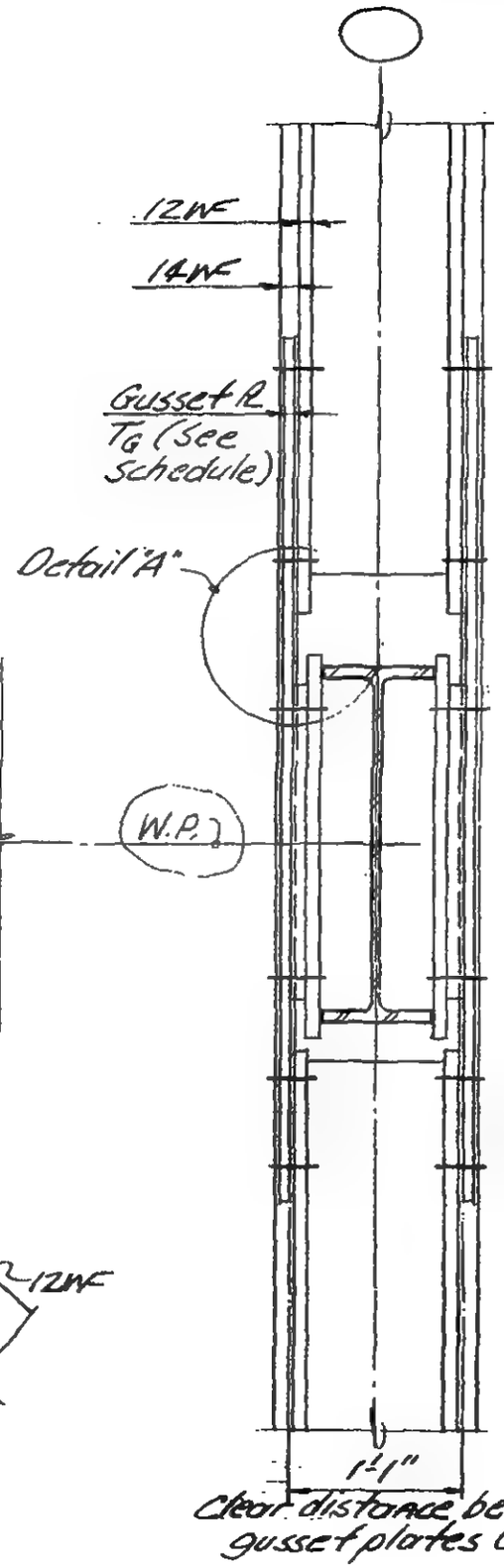

Section a-a

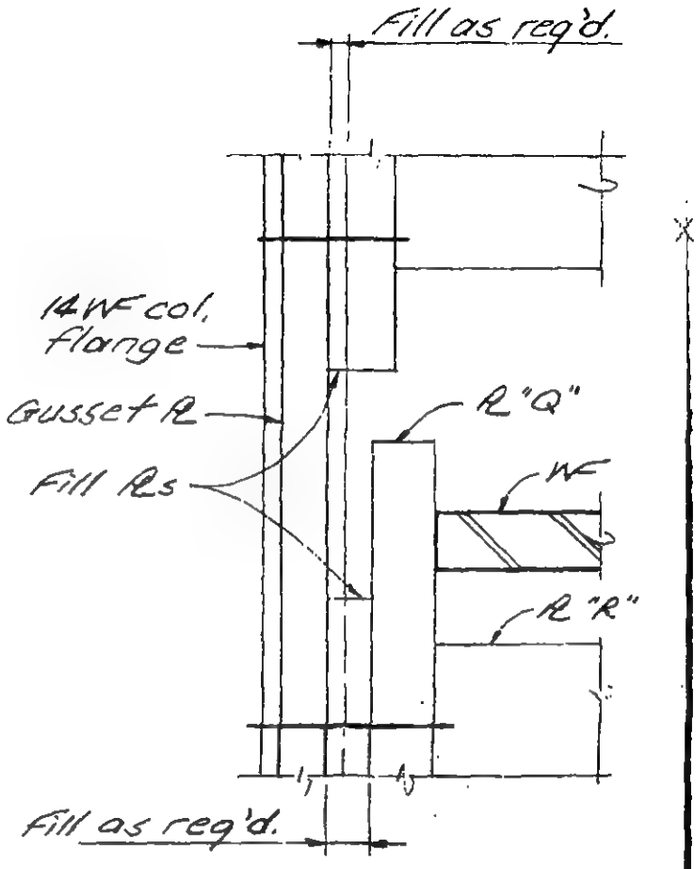

Detail "A"

Note 1.
Minimum dimension. Increase as required to accommodate connection material. See specific details.

LICENSED PROFESSIONAL ENGINEER
LESLIE E. ROBERTSON
No. 34960
UNIVERSITY OF THE STATE OF NEW YORK

DESIGNED E. Drakos
DRAWN J. Adams
REVIEWED E. Drakos

9-AB2-1.1

SKILLING, HELLE, CHRISTIANSEN, ROBERTSON — Structural & Civil Engineers

PROJECT THE WORLD TRADE CENTER | TITLE FL 107-PH TYPICAL DETAILS-TRUSS CONNECTIONS | DATE 4-1-70

REVISIONS

5-27-70

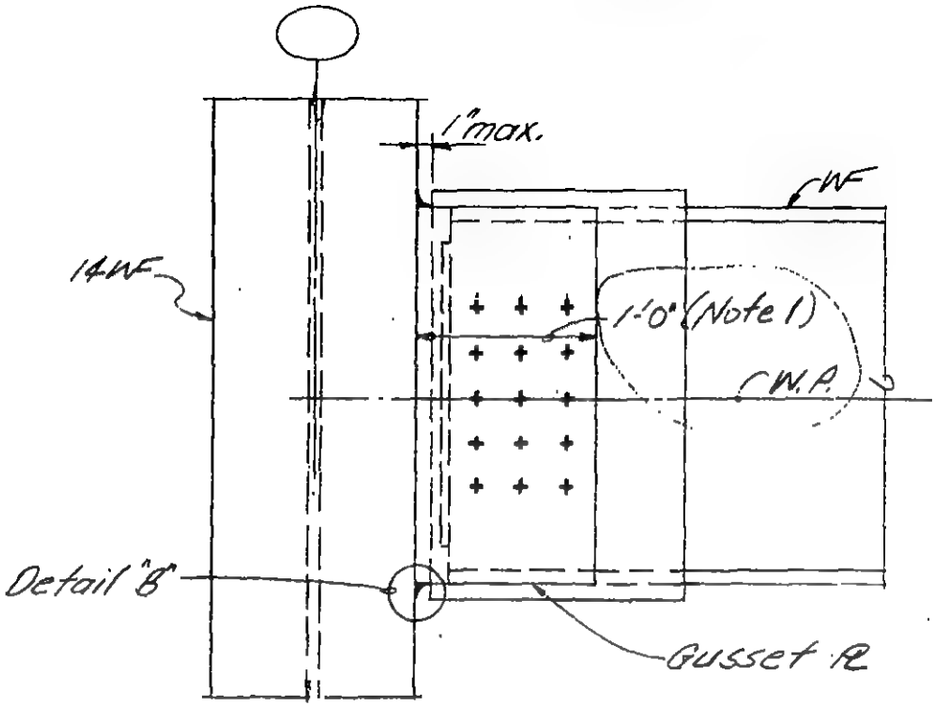

Beam to Column Connection

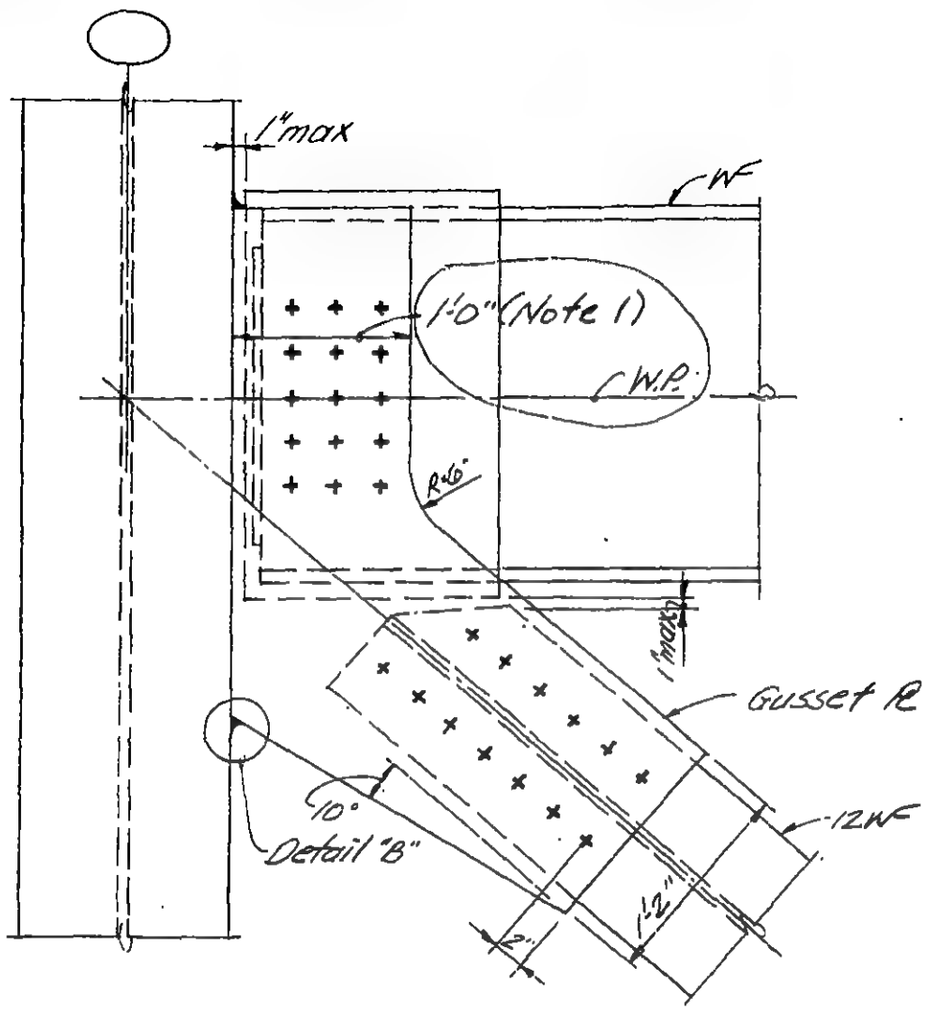

Diagonal and Beam to Column Conn.

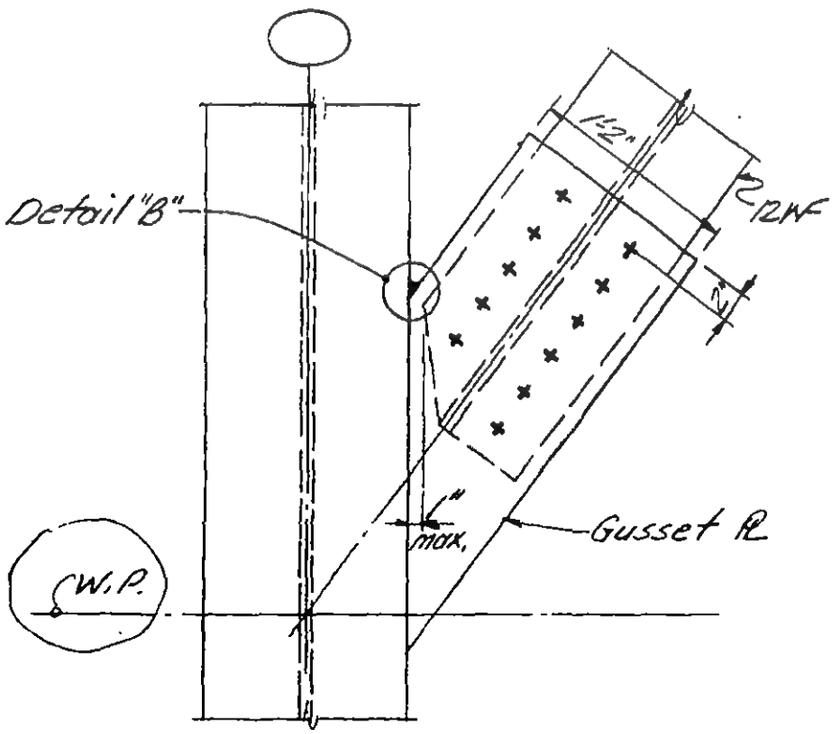

Diagonal to Column Conn.

LICENSED PROFESSIONAL ENGINEER LESLIE E. ROBERTSON No 34360 UNIVERSITY OF THE STATE OF NEW YORK

DESIGNED E. Dravos

DRAWN J. Adams

REVIEWED E. Dravos

9-ABZ-1.2

SKILLING, HELLE, CHRISTIANSEN, ROBERTSON — Structural & Civil Engineers

PROJECT: THE WORLD TRADE CENTER | TITLE: FL 107-PH TYPICAL DETAILS-TRUSS CONNECTIONS | DATE: 4-1-70

REVISIONS

5-27-70

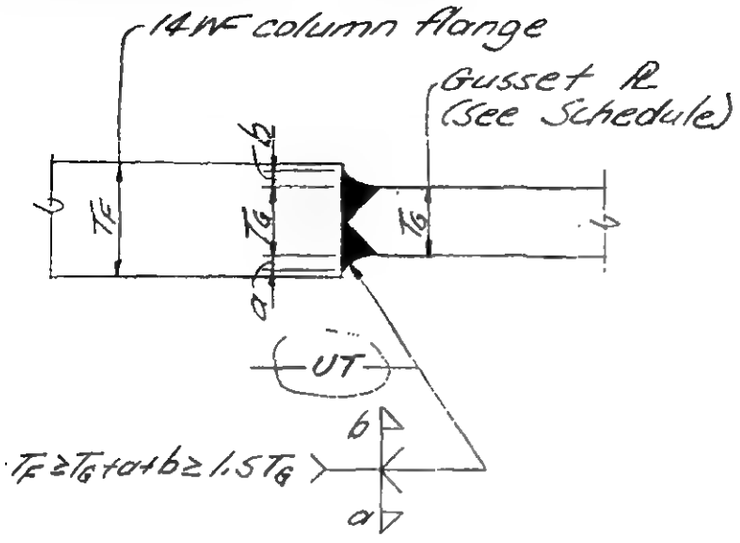

SCHEDULE			
TYPE	T_G (in.)	F_y (ksi)	Remarks
2-1W	1"	50	
2-1X	$\frac{7}{8}$"	50	
2-1Y	$\frac{3}{4}$"	50	
2-1Z	$\frac{5}{8}$"	50	

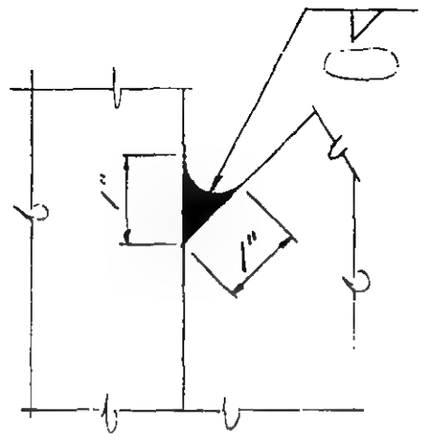

Typical Gusset PL to Column Flange Weldment

Detail "B"

Note:
All holes in gusset plates are 3/16" larger than nominal bolt diameter.

LICENSED PROFESSIONAL ENGINEER — LESLIE E. ROBERTSON — No 34360 — UNIVERSITY OF THE STATE OF NEW YORK

DESIGNED: E. Dracos
DRAWN: J. Adams
REVIEWED: E. Dracos

9-ABZ-1.3

SKILLING, HELLE, CHRISTIANSEN, ROBERTSON — Structural & Civil Engineers

PROJECT: THE WORLD TRADE CENTER | TITLE: FL 107-PH TYPICAL DETAILS-TRUSS CONNECTIONS | DATE: 4-1-70

REVISIONS

5-27-70

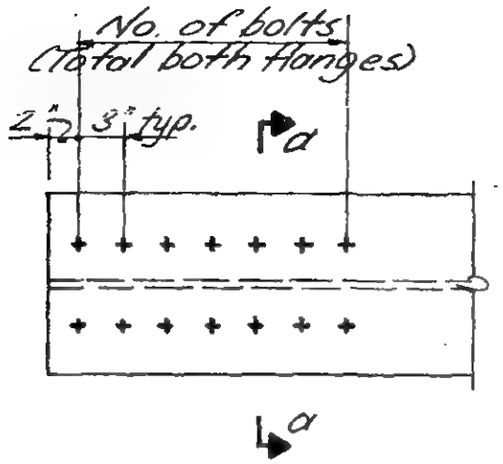

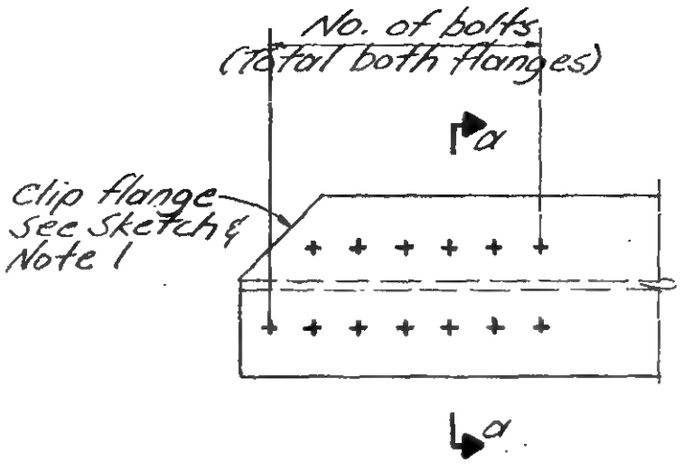

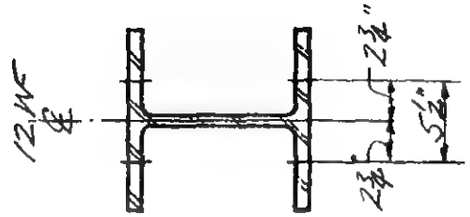

Section a-a

Diagonal End Elevation

SCHEDULE		
TYPE	NO. OF BOLTS	REMARKS
2-2A	34	Note 3
2-2B	26	Note 3
2-2C	22	Note 3

Notes:

1. Clip one side of diagonal when it interferes with beam or column.
2. All bolts are friction type, 1"ø, A490. All holes in diagonals are 1/16" larger than nominal bolt diameter
3. Number of bolts shown in Schedule is minimum required. In a non-clipped diagonal add two more bolts to the total number of bolts shown in the schedule.

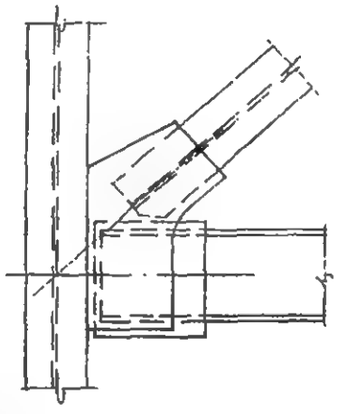

Diag. Interference with Beam

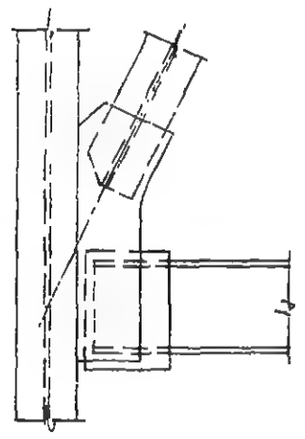

Diag. Interference with Column

Sketch

LICENSED PROFESSIONAL ENGINEER — LESLIE E. ROBERTSON — No 34360 — UNIVERSITY OF THE STATE OF NEW YORK

DESIGNED E. Drakos

DRAWN J. Adams

REVIEWED E. Drakos

9-AB2-2

SKILLING, HELLE, CHRISTIANSEN, ROBERTSON — Structural & Civil Engineers

PROJECT: THE WORLD TRADE CENTER | TITLE: FL 107-PH TYPICAL DETAILS-TRUSS CONNECTIONS | DATE: 4-1-70

REVISIONS
5-27-70
6-15-70
7-8-70

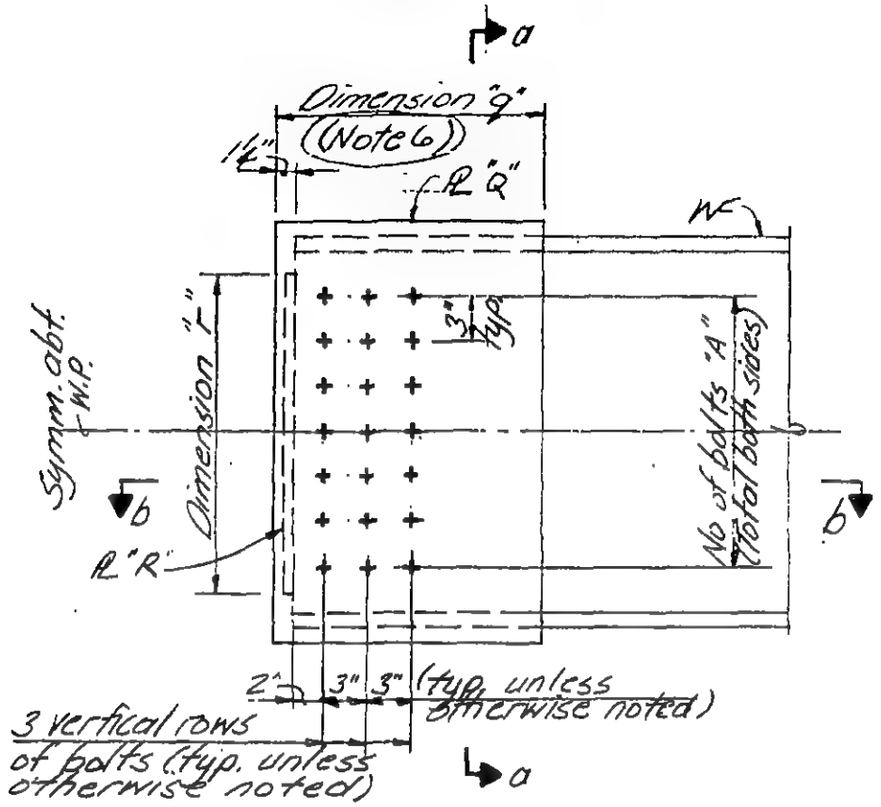

Beam End Elevation

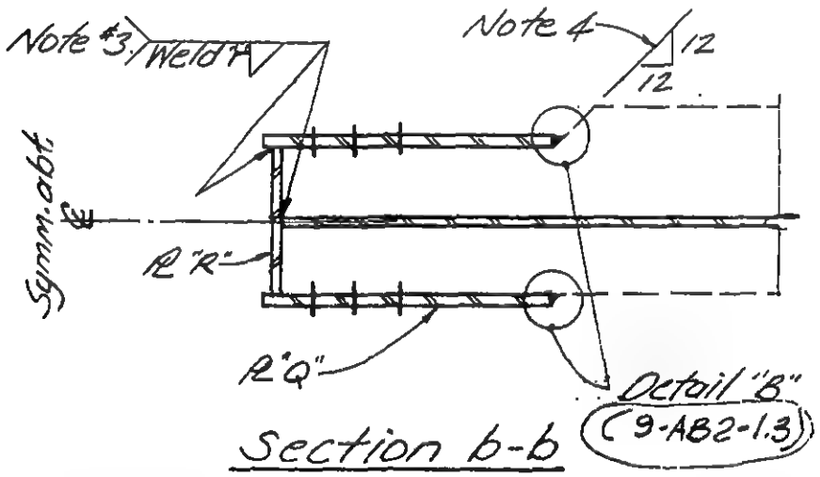

Section b-b

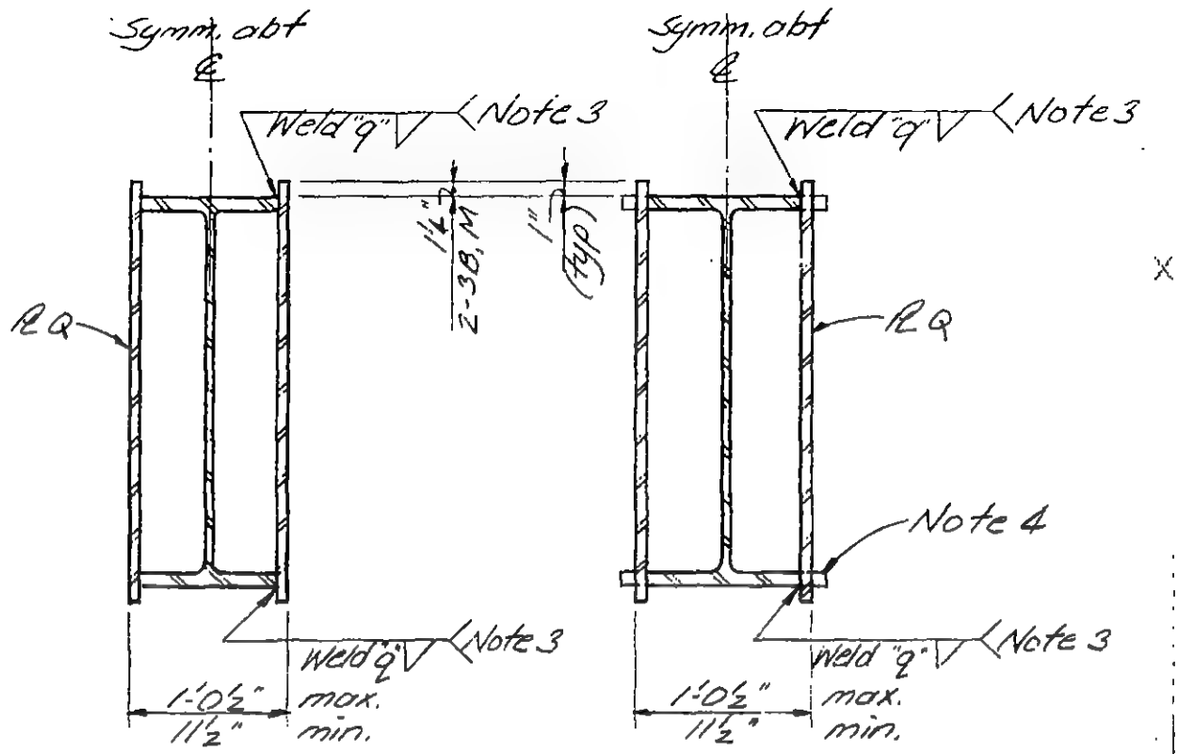

Section a-a

SCHEDULE

BEAM	TYPE	NO. OF BOLTS "A"	℄ "Q" x Dim "q"	Weld "q"	℄ "R" x Dim "r"	Weld "r"	Remarks
36WF	2-3A	36	1"x1'-6"	3/4"	5/8" x 2'-6"	7/16"	
30WF	2-3B	48	1"x1'-6"	15/16"	5/8" x 2'-0"	3/8"	
	2-3C	30	1"x1'-6"	5/8"	5/8" x 2'-0"	3/8"	
27WF	2-3D	36	1"x1'-6"	3/4"	5/8" x 1'-9"	5/16"	
	2-3E	24	1"x1'-6"	7/16"	5/8" x 1'-9"	5/16"	
24WF	2-3F	36	1"x1'-6"	11/16"	5/8" x 1'-6"	5/16"	
	2-3G	24	1¼"x1'-6"	7/16"	5/8" x 1'-6"	5/16"	
21WF	2-3H	18	1¼"x1'-0"	7/16"	5/8" x 1'-3"	5/16"	
18WF	2-3K	30	1"x1'-6"	11/16"	5/8" x 1'-3"	5/16"	
24WF	2-3M	48	1"x1'-6"	1"	5/8" x 1'-6"	3/8"	Note #5
	2-3N	36	1"x1'-6"	3/4"	5/8" x 1'-6"	5/16"	

Notes:
1. All bolts are friction type, 1"ϕ A490. All holes in beam end are 1/16" larger than nominal bolt diameter.
2. ℄ "Q" & ℄ "R" Fy36 material.
3. Fillet welds "q" & "r" can be substituted by equivalent capacity groove welds
4. If beam flange width exceeds 10½" cut top & bottom flanges as shown.
5. Provide 4 vertical rows at 3" spacing.
6. Minimum dimension required. Increase dimension shown on Schedule as noted on specific details.

LICENSED PROFESSIONAL ENGINEER — LESLIE E. ROBERTSON — No. 34360 — UNIVERSITY OF THE STATE OF NEW YORK

DESIGNED: E. Drakos
DRAWN: J. Adams
REVIEWED: E. Drakos

9-AB2-3

SKILLING, HELLE, CHRISTIANSEN, ROBERTSON — Structural & Civil Engineers

PROJECT: THE WORLD TRADE CENTER | TITLE: FL 107-PH TYPICAL DETAILS-TRUSS CONNECTIONS | DATE: 4-1-70

REVISIONS

5-27-70

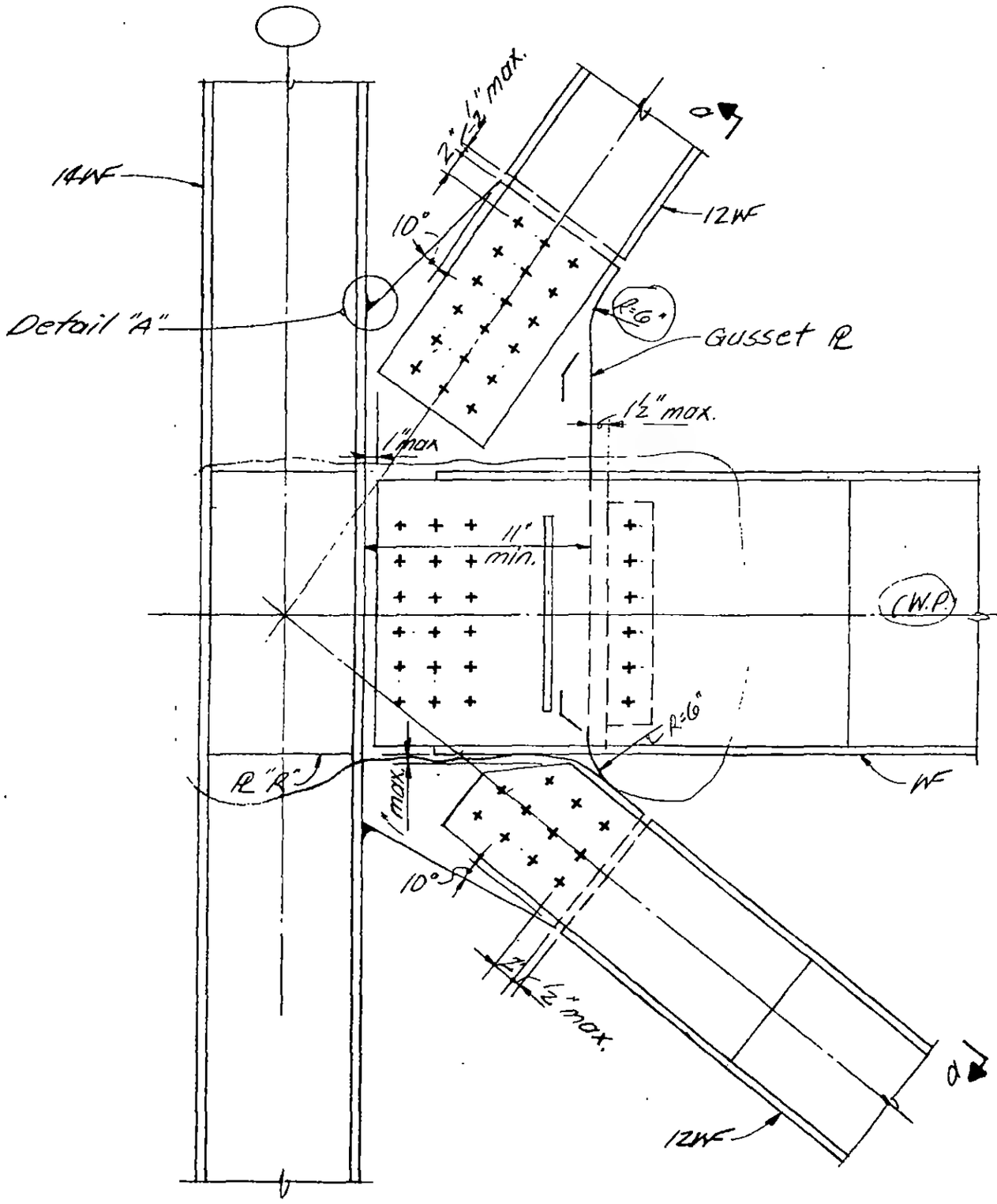

Two Diagonal and Beam to Column Connection.

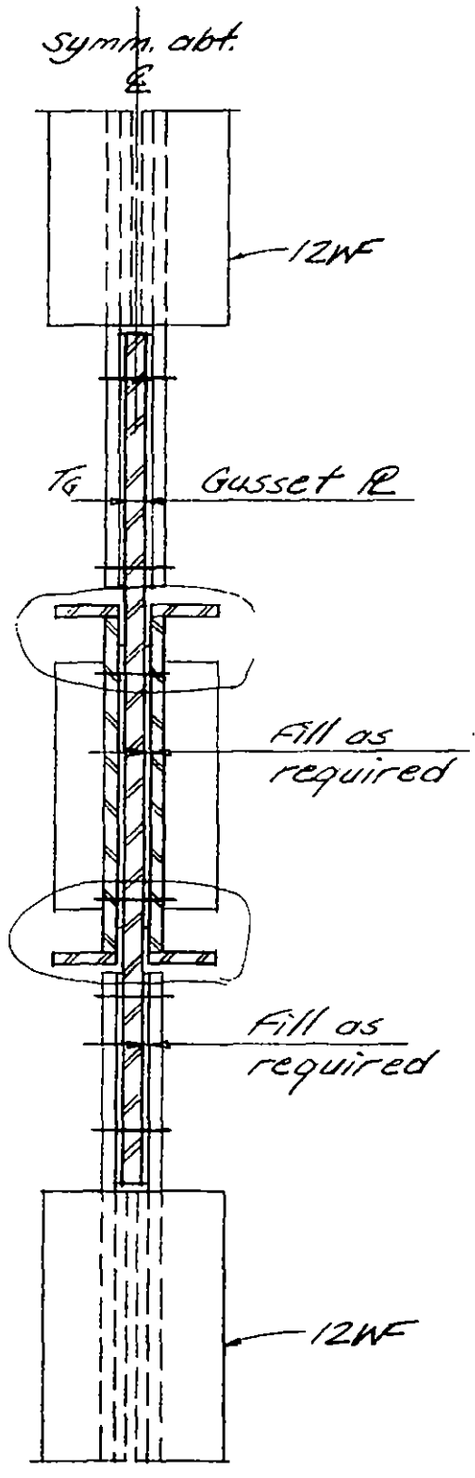

Section a-a.

LICENSED PROFESSIONAL ENGINEER — LESLIE E. ROBERTSON — No. 34360 — UNIVERSITY OF THE STATE OF NEW YORK

DESIGNED: E. Drakos
DRAWN: J. Adams
REVIEWED: E. Drakos

9-AB2-4.1

SKILLING, HELLE, CHRISTIANSEN, ROBERTSON — Structural & Civil Engineers

PROJECT: THE WORLD TRADE CENTER | TITLE: FL 10T-PH TYPICAL DETAILS-TRUSS CONNECTIONS | DATE: 4-1-70

REVISIONS

5-27-70

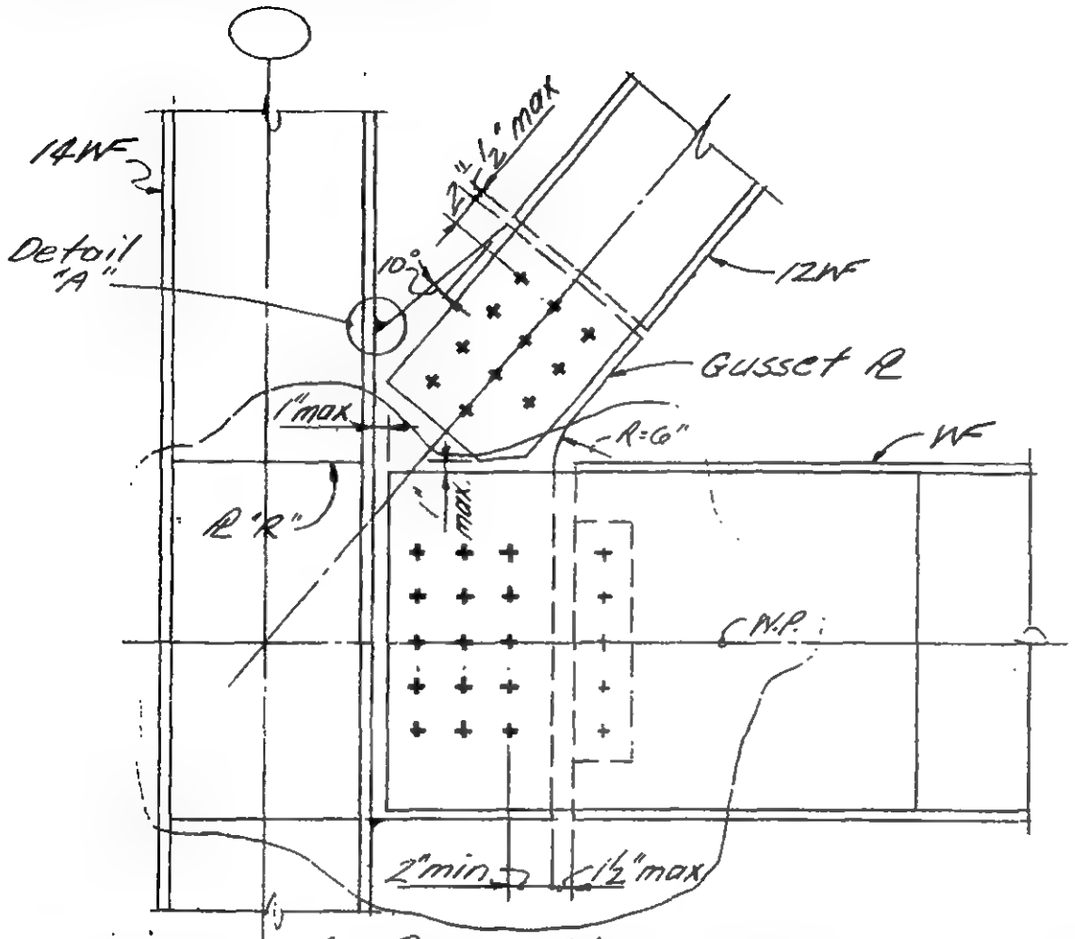

Diagonal from Above and Beam to Column Connection

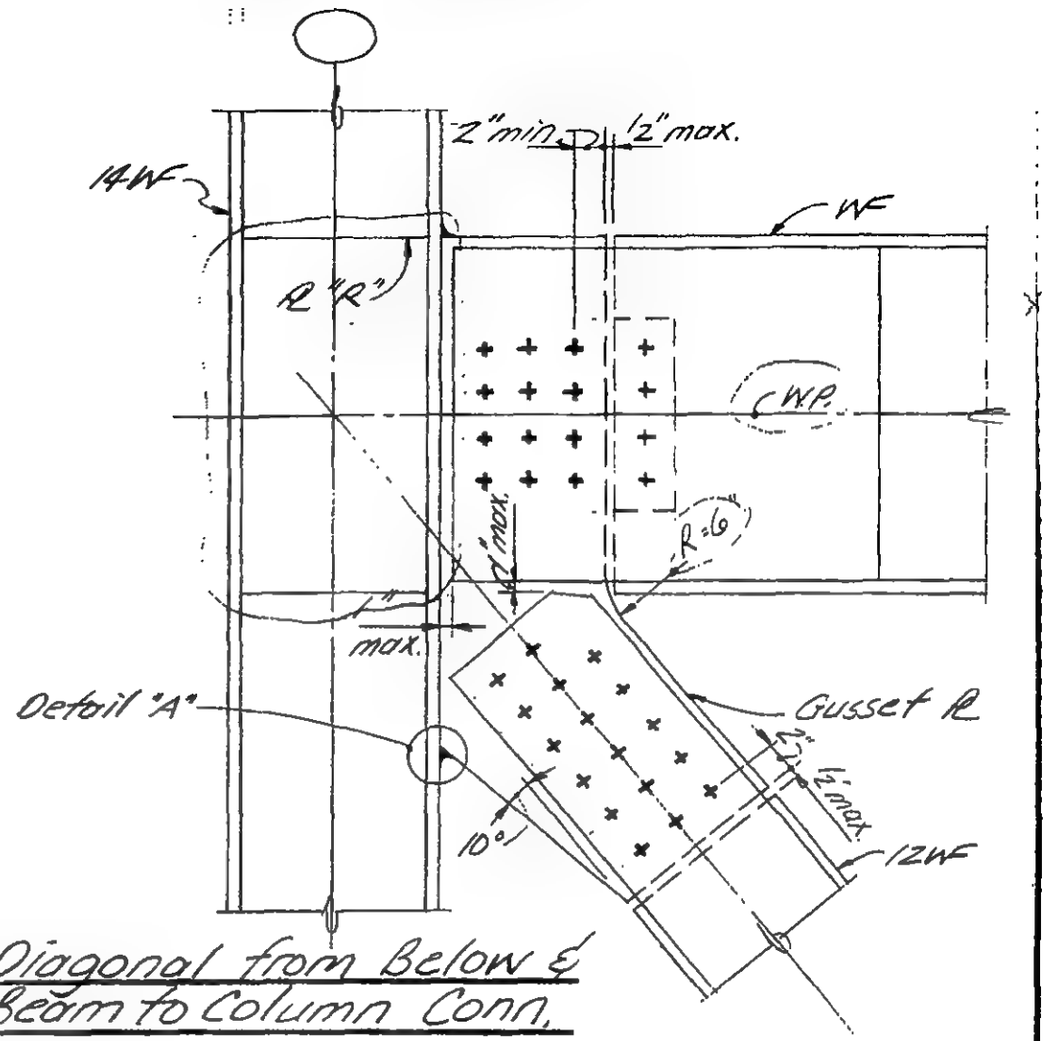

Diagonal from Below & Beam to Column Conn.

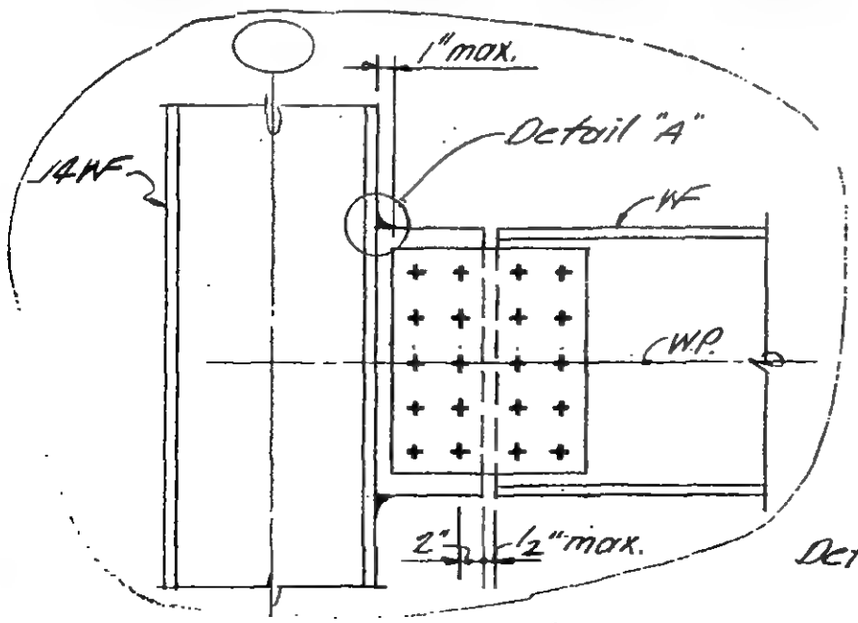

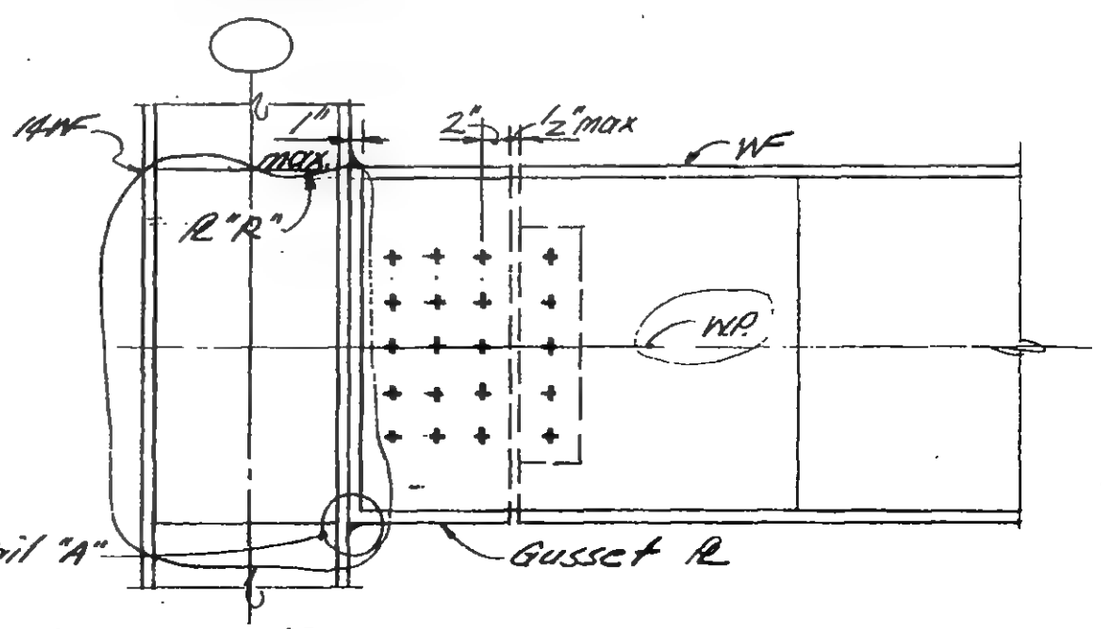

Beam to Column Connection

LICENSED PROFESSIONAL ENGINEER — LESLIE E. ROBERTSON — No. 34360 — UNIVERSITY OF THE STATE OF NEW YORK

DESIGNED: E. Drakos
DRAWN: J. Adams
REVIEWED: E. Drakos

9-ABZ-4.Z

SKILLING, HELLE, CHRISTIANSEN, ROBERTSON — Structural & Civil Engineers

PROJECT: THE WORLD TRADE CENTER | TITLE: FL 107-PH TYPICAL DETAILS-TRUSS CONNECTIONS | DATE: 4-1-70

REVISIONS

5/27/70

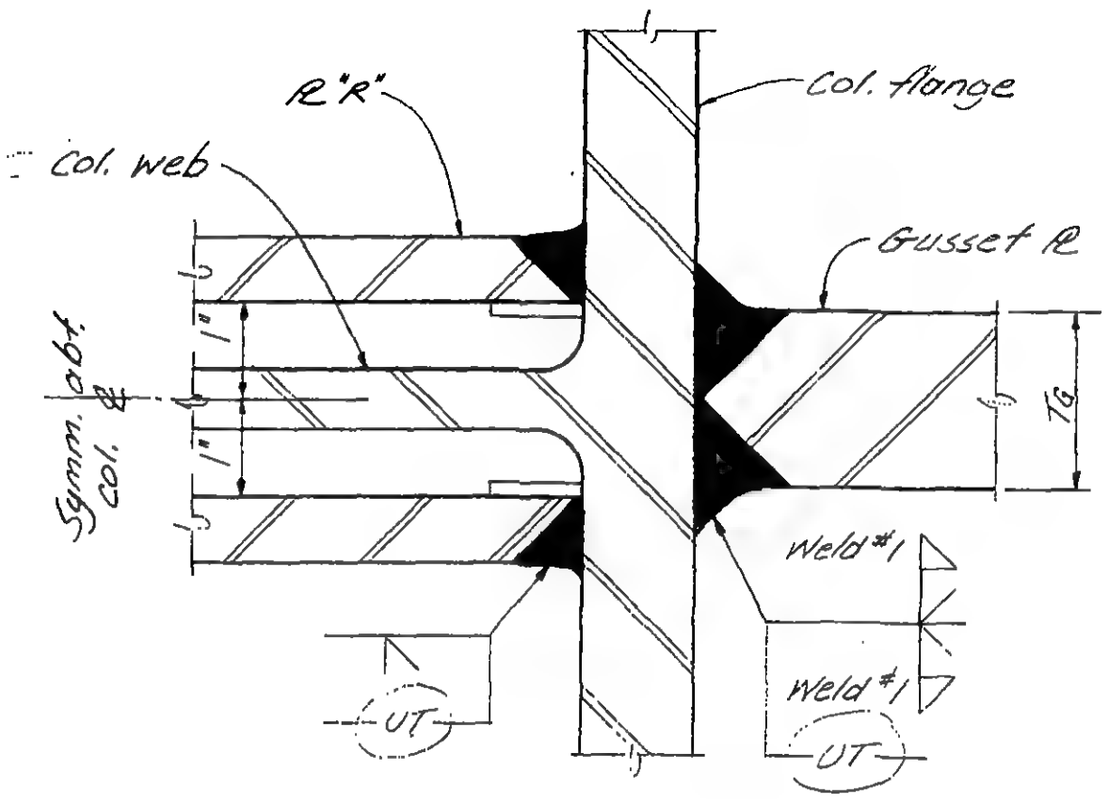

Typical Gusset Plate to Column Weldment Thru Plate "R"

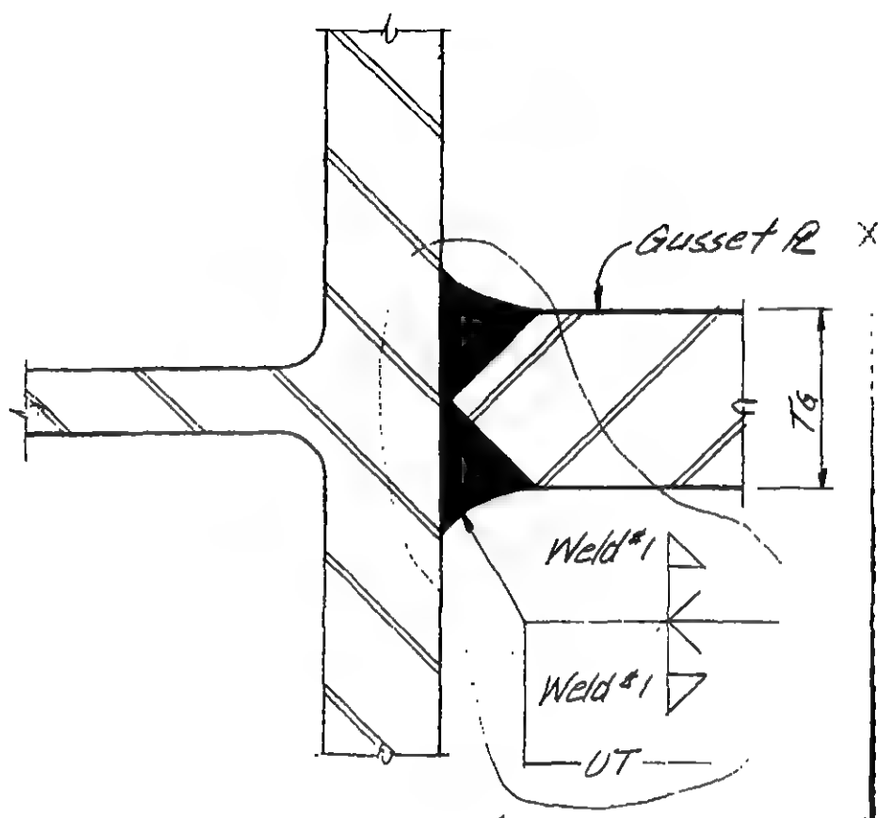

Typical Gusset Plate to Column Weldment Above & Below Plate "R"

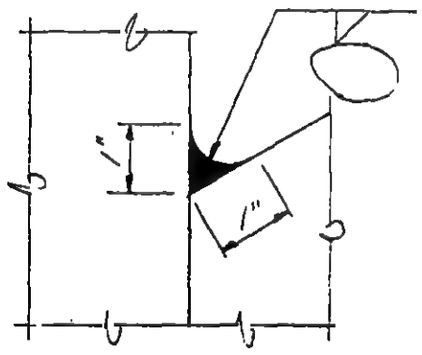

Detail "A"

SCHEDULE				
TYPE	GUSSET PL TG	WELD #1	PL "R"	REMARKS
2-4V	7/8"	1/8	None	
2-4W	5/8"	1/8	None	
2-4X	1 3/4"	3/8	1/2"	
2-4Y	1 1/2"	1/4	1/2"	
2-4Z	1/4"	1/4	3/8"	

Notes:
1. All gusset plates and plates "R" are Fy=50 material.
2. PL "R" is determined by the heaviest gusset PL existing at the connection. Depth of plate "R" equals the nominal depth of the deepest beam framing at the connection, or as shown in specific details.
3. All holes in gusset plate are 3/16" larger than the nominal bolt diameter.

LICENSED PROFESSIONAL ENGINEER — LESLIE E. ROBERTSON — No. 34360 — UNIVERSITY OF THE STATE OF NEW YORK

DESIGNED: E. Drakos
DRAWN: J. Adams
REVIEWED: E. Drakos

9-ABZ-4.3

SKILLING, HELLE, CHRISTIANSEN, ROBERTSON — Structural & Civil Engineers

PROJECT: THE WORLD TRADE CENTER | TITLE: FL 107-PH TYPICAL DETAILS-TRUSS CONNECTIONS | DATE: 4-1-70

REVISIONS

5/27/70
6-15-70

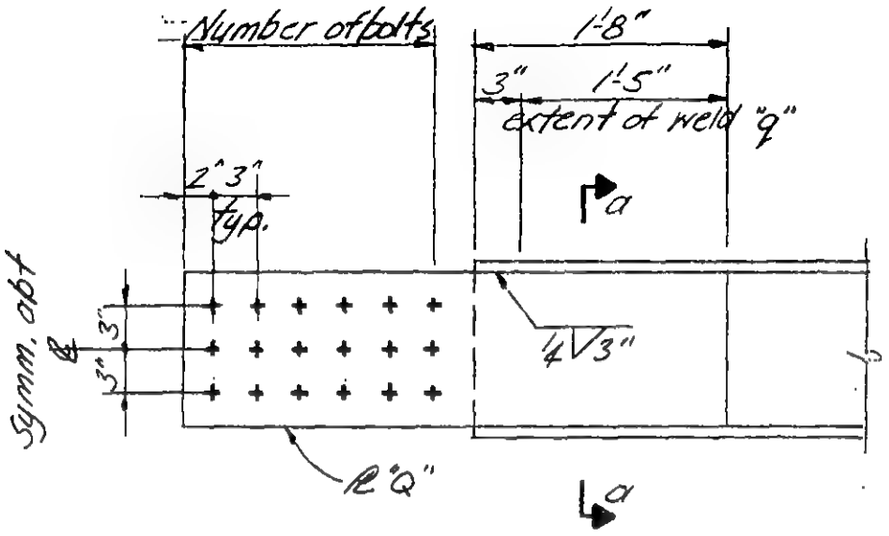

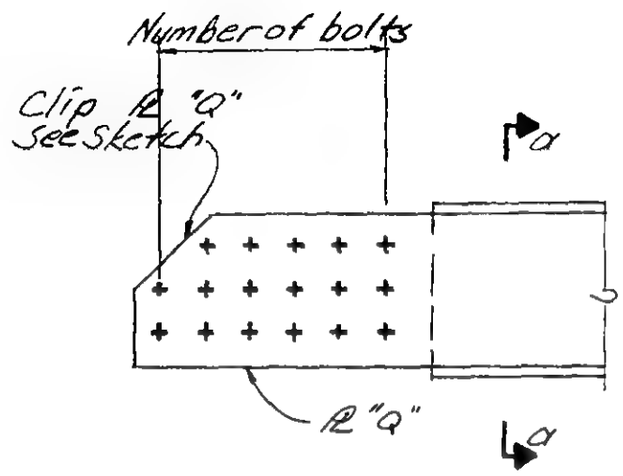

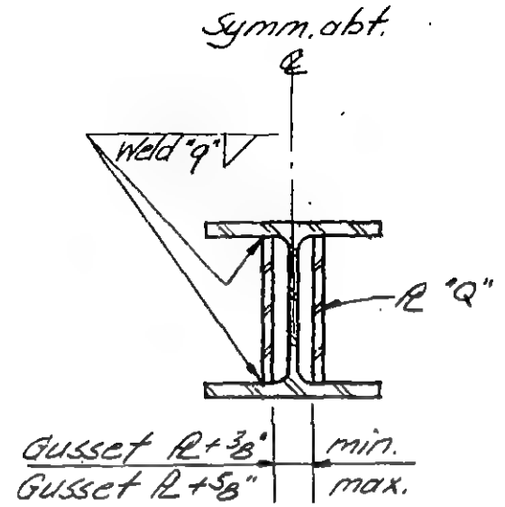

Section a-a

Diagonal End Elevation

SCHEDULE					
TYPE	NO. OF BOLTS	℄ "Q"	Fy	WELD "q"	REMARKS
2-5A	17	¼"	50	⅝"	Note 2
2-5B	14	1"	50	½"	Note 2
2-5C	11	¾"	50	7/16"	Note 2
2-5E	17	1¼"	50	¾"	Note 2
2-5F	14	1"	50	⅝"	Note 2
2-5G	11	¾"	50	½"	Note 2

Notes:

1. All bolts are friction type, 1"Ø. A490. All holes in ℄s "Q" are 1/16" larger than nominal bolt diameter.
2. Number of bolts shown in Schedule is minimum required. In a non-clipped diagonal add one more bolt to the total number of bolts shown in the Schedule.
3. Fillet weld "q" can be substituted by equivalent capacity partial penetration groove weld.

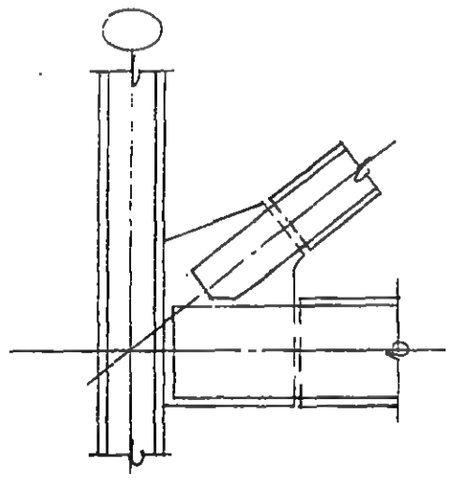

℄ "Q" Interference with Beam

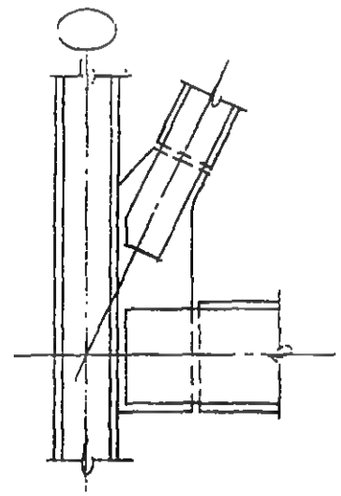

℄ "Q" Interference with Column

Sketch

LICENSED PROFESSIONAL ENGINEER — LESLIE E. ROBERTSON — No. 34960 — UNIVERSITY OF THE STATE OF NEW YORK

SIGNED: E. Drakos
DRAWN: I. Adams
REVIEWED: E. Drakos

9-ABZ-5

SKILLING, HELLE, CHRISTIANSEN, ROBERTSON — Structural & Civil Engineers

PROJECT: THE WORLD TRADE CENTER | TITLE: FL 107-PH TYPICAL DETAILS-TRUSS CONNECTIONS | DATE: 4-1-70

REVISIONS
5/27/70
6-15-70

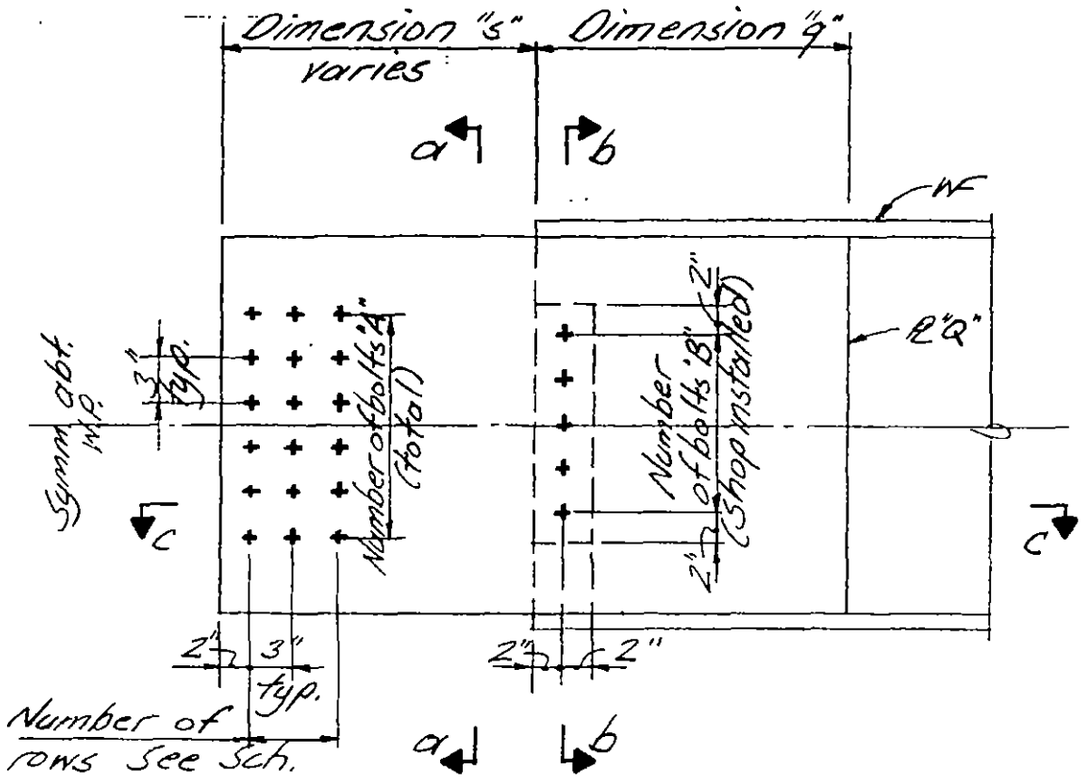

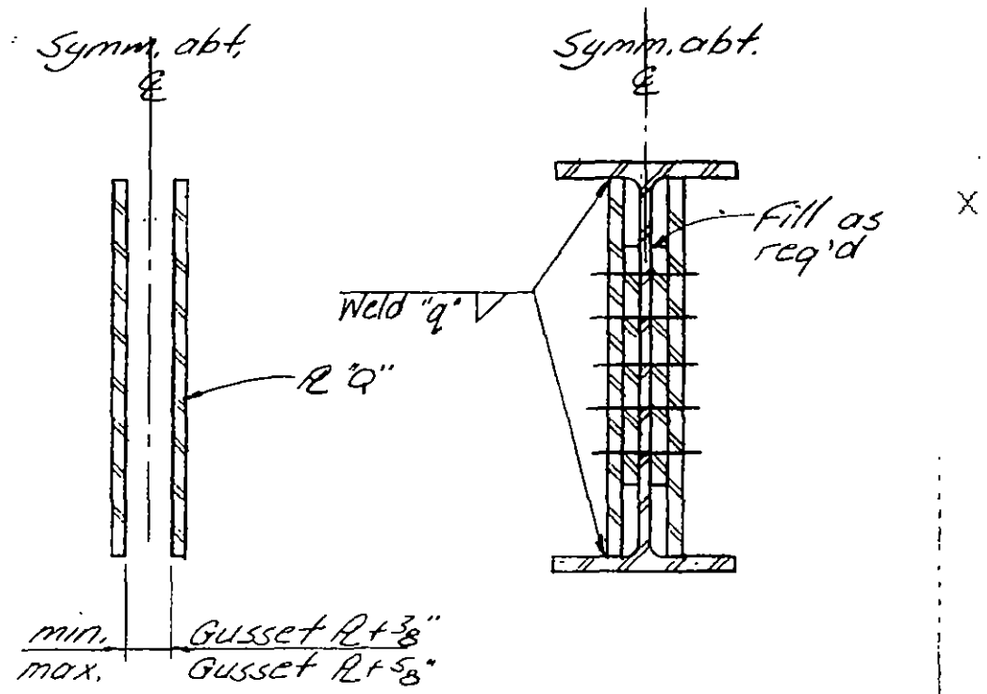

Section a-a — Section b-b

Beam End Elevation

Dimension "S" ≤ 1'-6"
(See 2-6.2 for dim. "S" 71'-6")

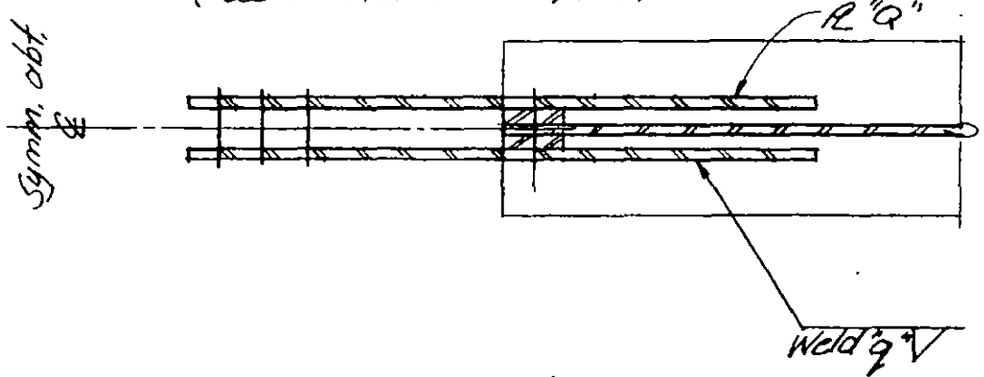

Section c-c

SCHEDULE

BEAM	TYPE	NO. BOLTS 'A' NO. OF ROWS	NO. BOLTS 'A' TOTAL BOLTS	R "Q" x Dim "q"	Weld "q"	NO. OF BOLTS "B"	REMARKS
36WF	Z-6A	3	18	3/4 x 2'-0"	5/8"	6	
30WF	Z-6B	3	12	3/4 x 2'-0"	1/2"	4	
27WF	Z-6D	4	20	1 x 2'-0"	3/4"	5	
	Z-6E	3	12	3/4 x 1'-8"	5/8"	4	
24WF	Z-6F	4	20	1 1/4 x 2'-0"	3/4"	5	
	Z-6G	3	12	3/4 x 1'-8"	5/8"	4	
18WF	Z-6J	3	12	1/2 x 1'-6"	9/16"	4	
24WF	Z-6M	4	24	1 1/4" x 2'-0"	15/16"	5	
	Z-6N	4	20	1 1/4" x 2'-0"	13/16"	4	

Notes:
1. All bolts are friction type, 1"ϕ, A490. All holes in beam ends are 1/16" larger than nominal bolt diameter.
2. Plate "Q" is Fy50 material.
3. Weld "q" can be substituted by an equivalent capacity partial penetration groove weld.

LICENSED PROFESSIONAL ENGINEER — LESLIE E. ROBERTSON — No. 34360 — UNIVERSITY OF THE STATE OF NEW YORK

DESIGNED: E. Drakos
DRAWN: J. Adams
REVIEWED: E. Drakos

9-ABZ-6.1

SKILLING, HELLE, CHRISTIANSEN, ROBERTSON — Structural & Civil Engineers

PROJECT: THE WORLD TRADE CENTER | TITLE: FL 107-PH TYPICAL DETAILS: TRUSS CONNECTIONS | DATE: 5-27-70

REVISIONS

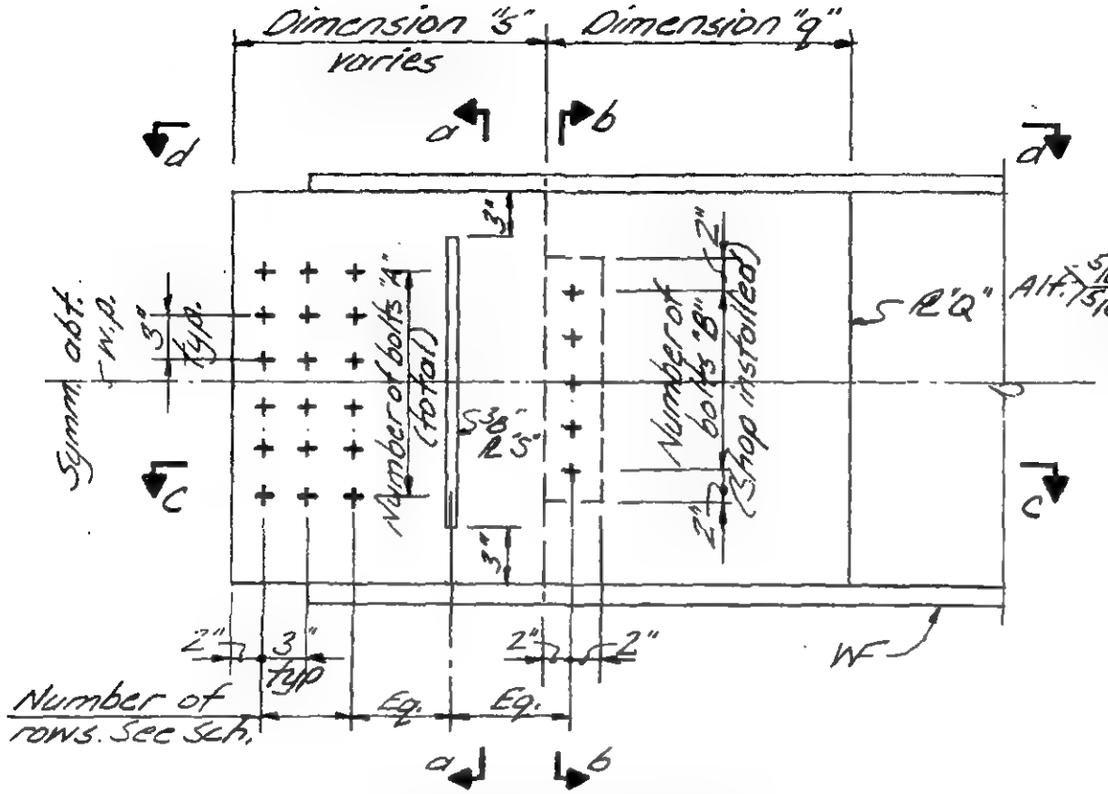

Beam End Elevation

Dimension "s" > 1'-6"

(see 2-6.1 for dim. "s" ≤ 1'-6"

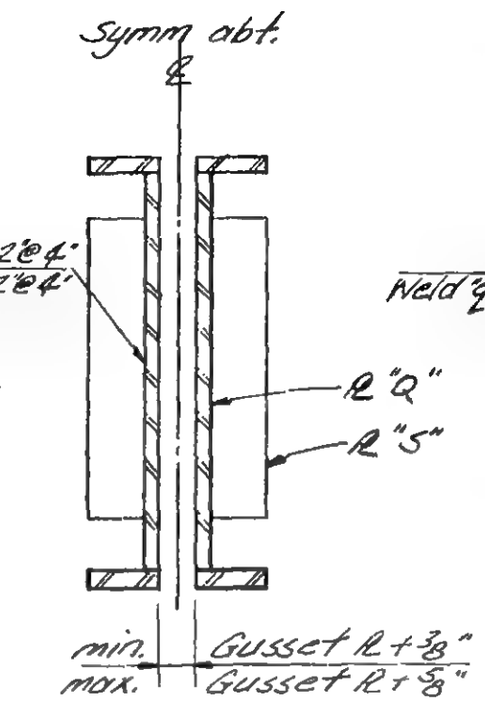

Section a-a

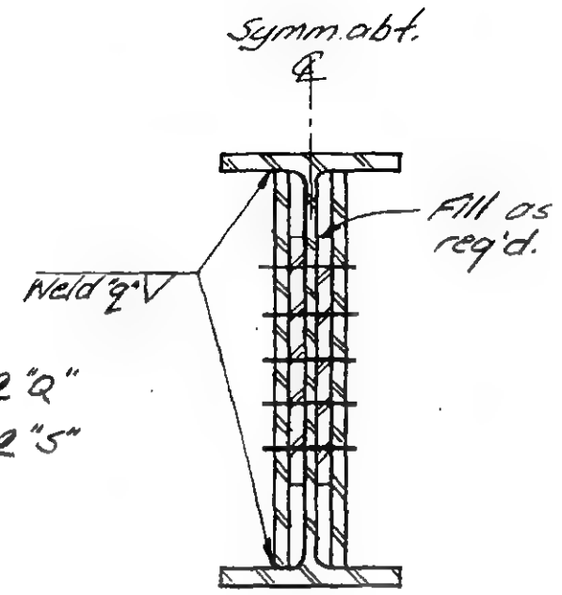

Section b-b

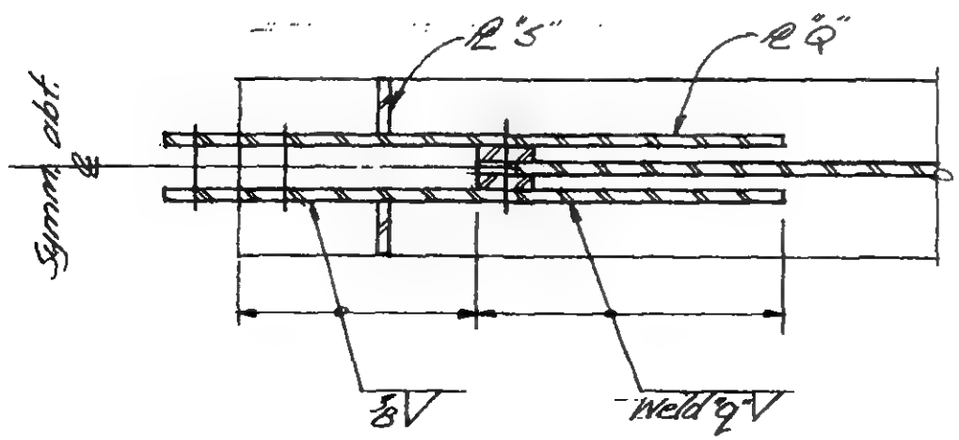

Section c-c

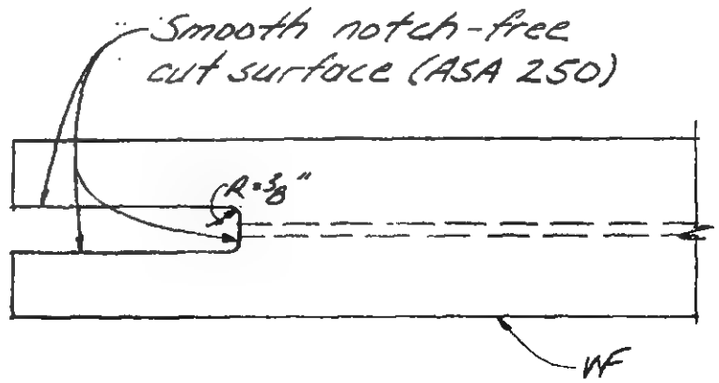

Section d-d

Note:
See 2-6.1 for Schedule and Notes.

LICENSED PROFESSIONAL ENGINEER — LESLIE E. ROBERTSON — No. 34360 — UNIVERSITY OF THE STATE OF NEW YORK

DESIGNED: E. Dranos
DRAWN: J. Adams
REVIEWED: E. Dranos

9-ABZ-6.2

SKILLING, HELLE, CHRISTIANSEN, ROBERTSON — Structural & Civil Engineers

PROJECT: THE WORLD TRADE CENTER | TITLE: EL 107-PH TYPICAL DETAILS - TRUSS CONNECTIONS | DATE: 5-27-70

REVISIONS

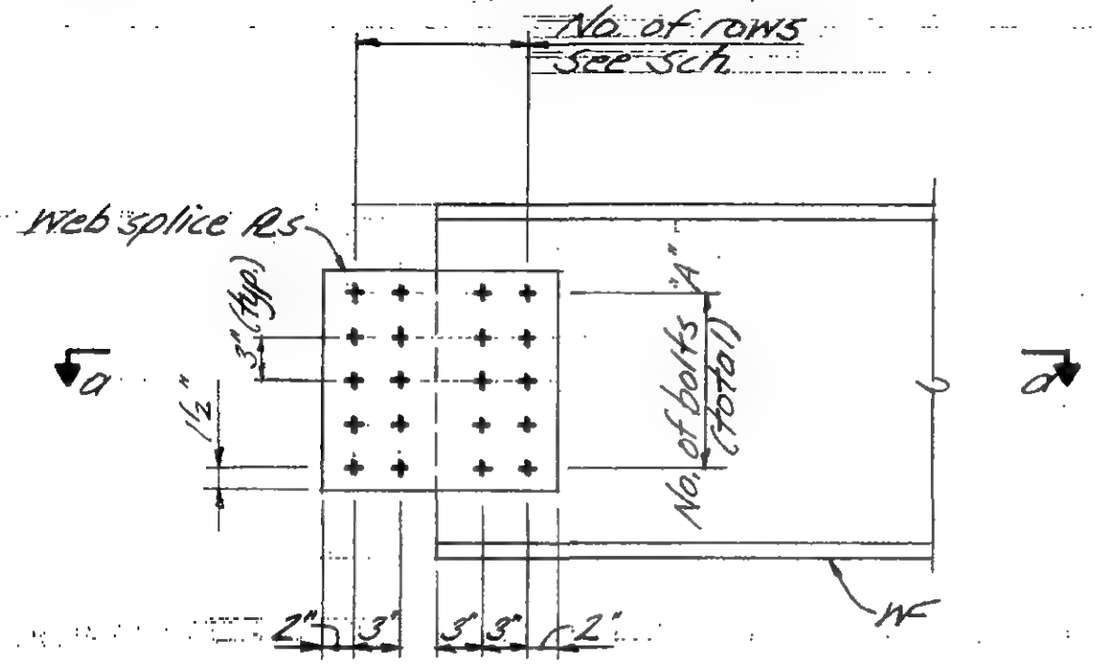

Beam End Elevation

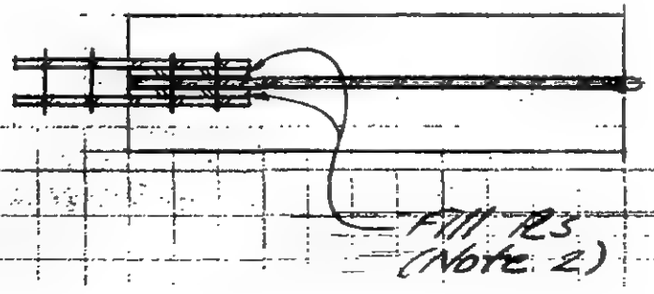

Section a-a

SCHEDULE

Beam	Type	No. bolts "A"		Web splice plates		Remarks
		No. of rows	Total bolts	t	Fy	
24WF	2-7A	4	20	½"	50	
18WF	2-7B	4	16	½"	50	
	2-7C	2	8	⅜"	50	

Notes:

1. All bolts are friction type, 1"ϕ, A490. All holes in web splice Rs are 1/16" larger than nominal bolt size.
2. If total requirement of fill Rs is less than or equal to ⅜", one side of web only may be filled.

LICENSED PROFESSIONAL ENGINEER — LESLIE E. ROBERTSON — No. 34360 — UNIVERSITY OF THE STATE OF NEW YORK

DESIGNED: Drakos
DRAWN: J. Adams
REVIEWED: E. Drakos

9-AB2-7

SKILLING, HELLE, CHRISTIANSEN ROBERTSON — Structural & Civil Engineers

PROJECT THE WORLD TRADE CENTER | TITLE FLOOR 107-PH STUDS-TYPICAL DETAILS | DATE 10-20-70

ISIONS

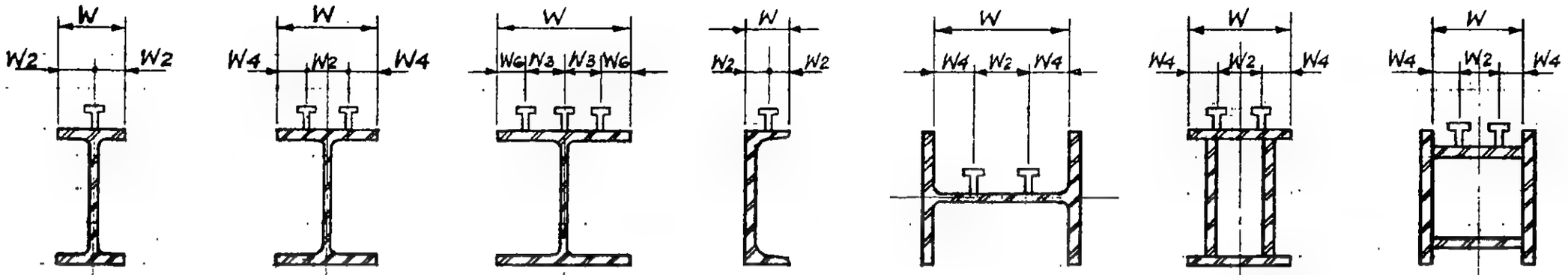

One Row W≤6 6≤W≤9 (Note 4) | Two Rows (Note 4) | Three Rows (Note 5) | Typ. Det. at Channel | Typ. Det. at 14WF with Horiz. Web | Typical Detail of Built-Up Beams

TYPICAL DETAILS - ONE, TWO & THREE ROWS

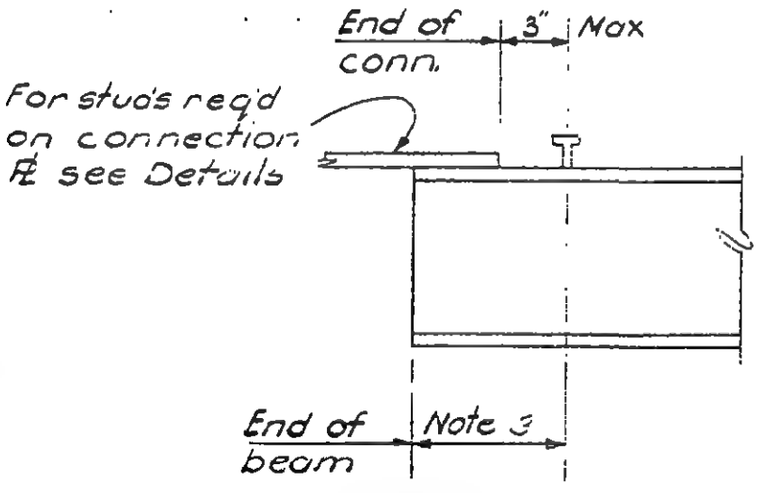

Typical Detail at Connection

Notes:

1. Studs are indicated thus in the plans: N39 or N39C. N is the designation for studs; 39 is the number of studs required; C is the stud placement (see 9-AB3-1.2 & 1.3). Where no letter is given, stud placement A is required.
2. All studs are ¾"ϕ x 0'-3" headed shear studs.
3. Clearance for connection.
4. Use two rows for W=6" to 9" where studs in a single row would otherwise be less than 4" o.c. Use two rows for W=9" and greater except as provided in Note 5.
5. Use three rows for W=9" or more where studs in two rows would otherwise be less than 4" o.c.

REGISTERED PROFESSIONAL ENGINEER LESLIE E. ROBERTSON No 34980 CITY OF THE STATE OF NEW YORK

DR ED

DRAWN Huggins

REVIEWED

9-AB3-1.1

SKILLING, HELLE, CHRISTIANSEN, ROBERTSON — Structural & Civil Engineers

PROJECT THE WORLD TRADE CENTER | TITLE FLOOR 107-PT STUDS-TYPICAL DETAILS | DATE 10-20-70

ISIONS

Placement A

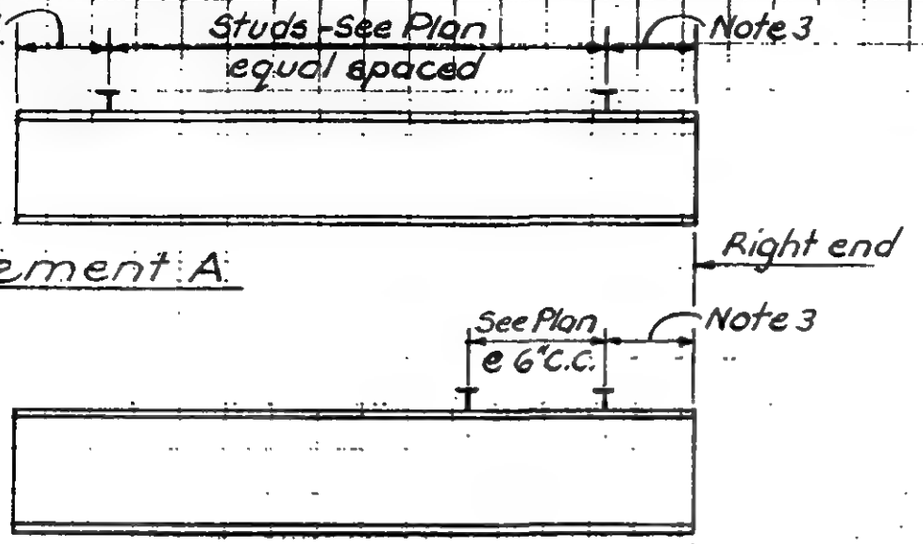

Placement B

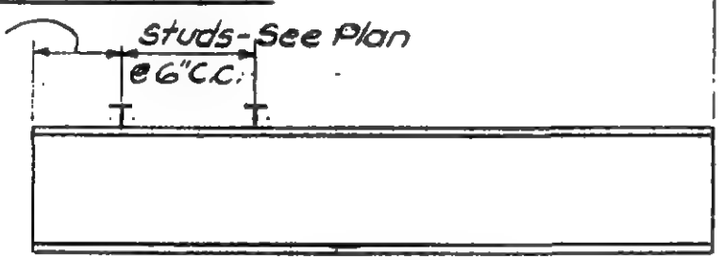

Placement C

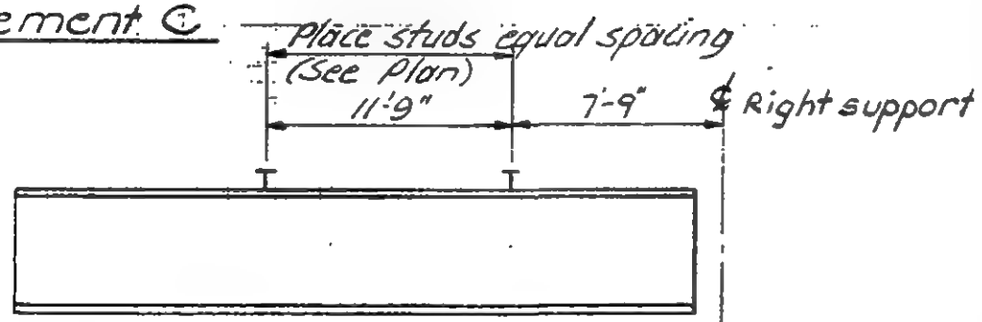

Placement D

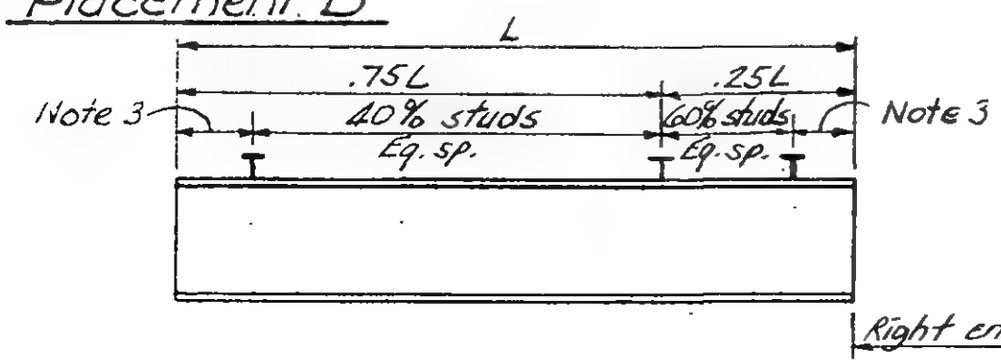

Placement E

Placement F

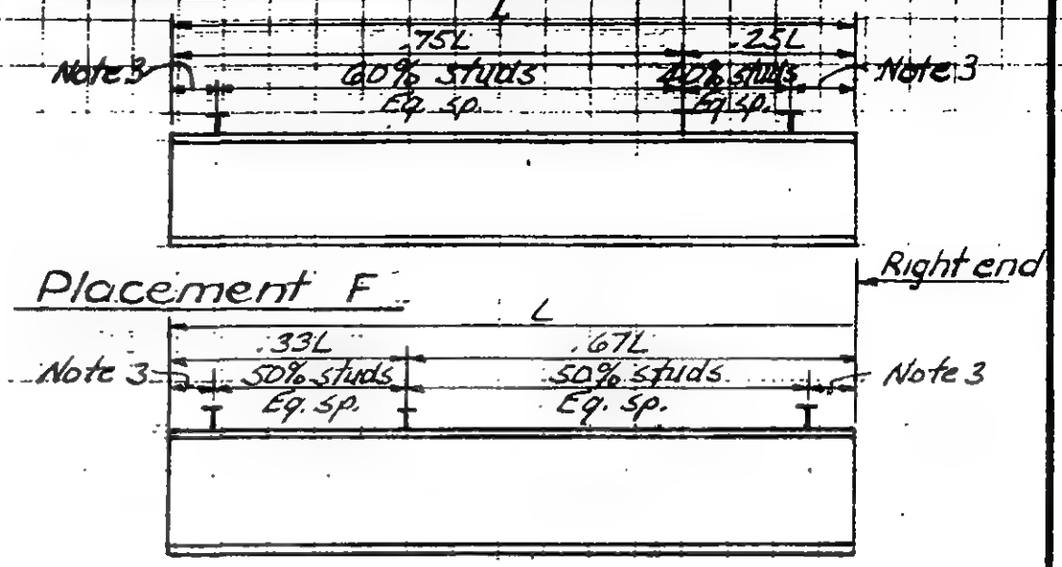

Placement G

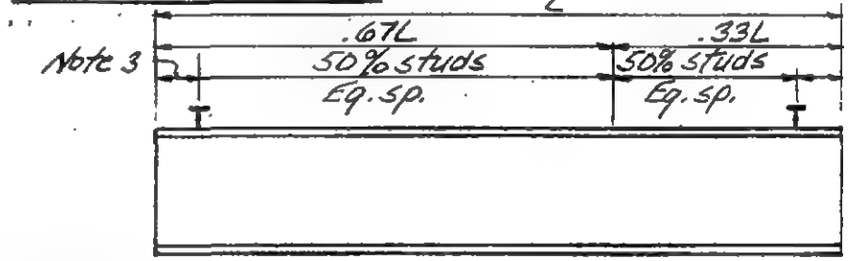

Placement H

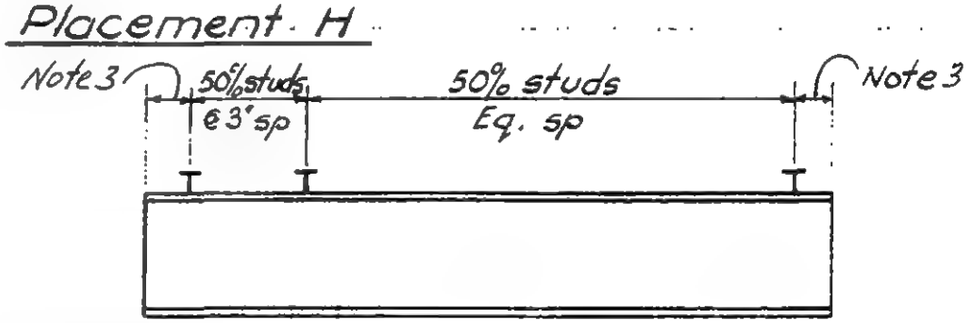

Placement J

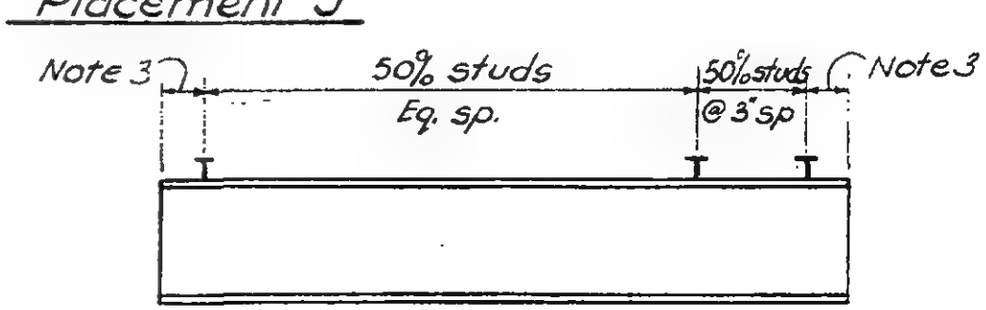

Placement K

ED PROFESSIONAL ENGINEER
LIE E. ROBERTSON
No 34360
TY OF THE STATE OF NEW YORK

DE ED

DRAWN
D. Huggins
REVIEWED

9-AB3-1.2

SKILLING, HELLE, CHRISTIANSEN, ROBERTSON — Structural & Civil Engineers

PROJECT: THE WORLD TRADE CENTER | TITLE: FLOOR 107-PH STUDS-TYPICAL DETAILS | DATE: 10-20-70

REVISIONS

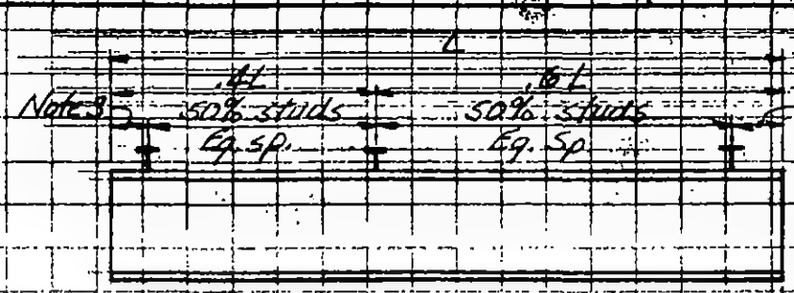

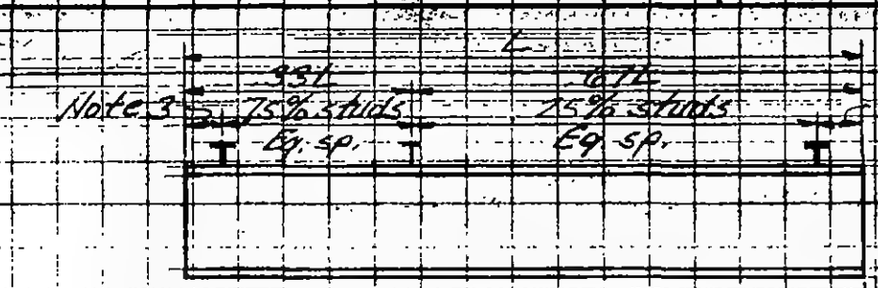

Placement L

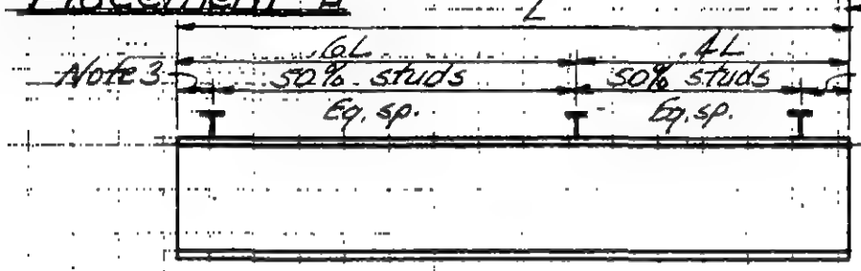

Placement R

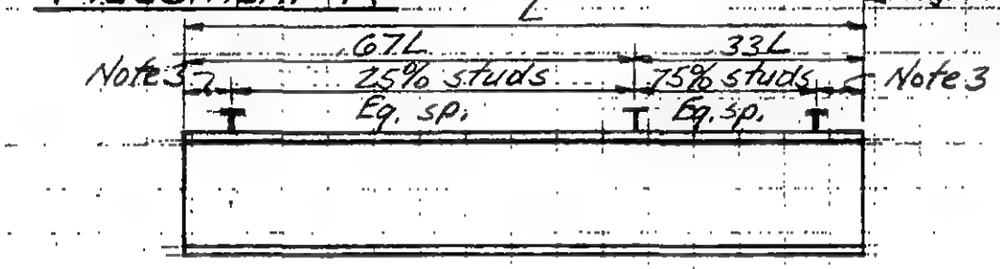

Placement M

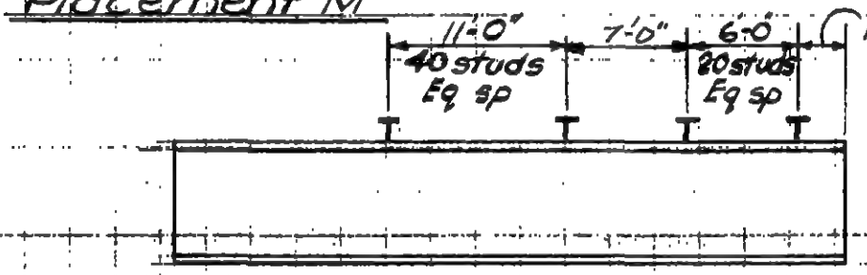

Placement S

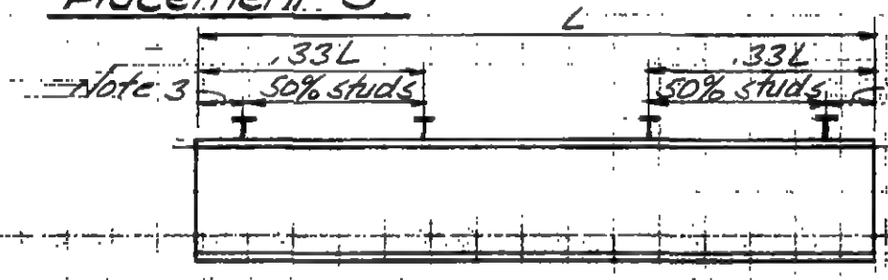

Placement N

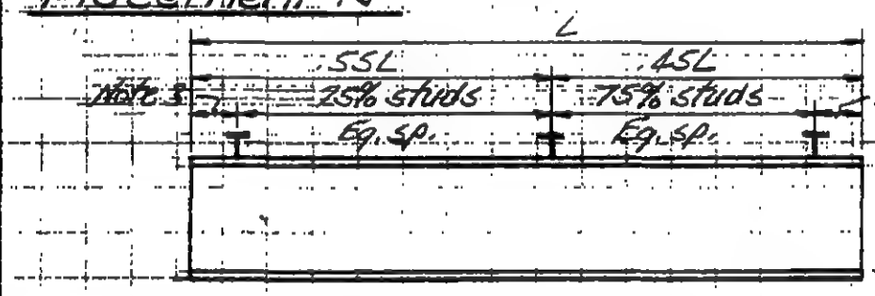

Placement T

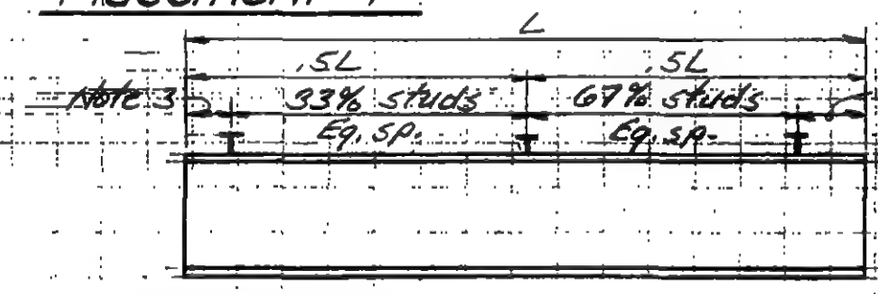

Placement P

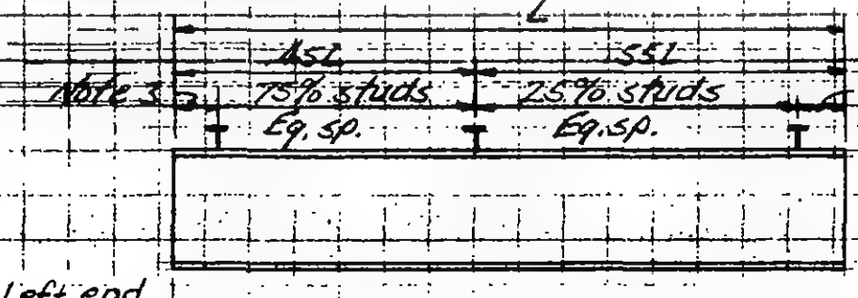

Left end

Placement U

Placement Q

LICENSED PROFESSIONAL ENGINEER
LESLIE E. ROBERTSON
No. 34560
UNIVERSITY OF THE STATE OF NEW YORK

DESIGNED

DRAWN
D. Nuggins

REVIEWED

9-AB3-1.3

SKILLING HELLE CHRISTIANSEN ROBERTSON — Structural & Civil Engineers

PROJECT THE WORLD TRADE CENTER | TITLE FLOOR JOIST H STUDS - TYPICAL DETAILS | DATE 12-14-79

SIONS

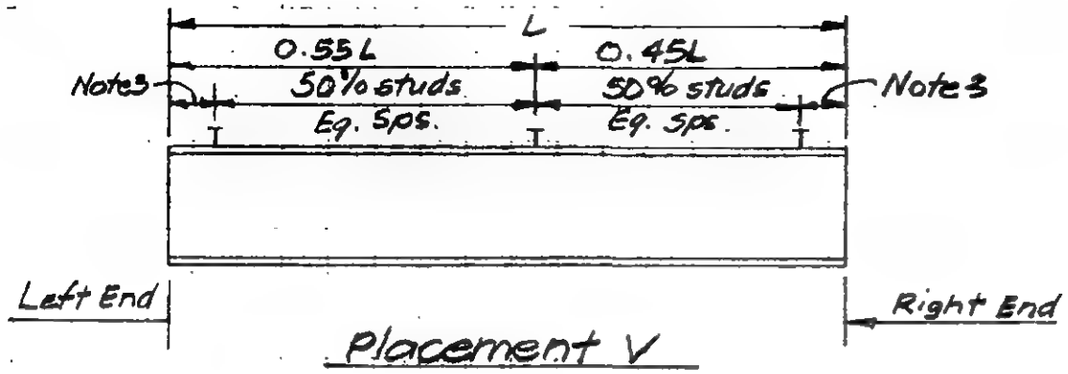

Placement V

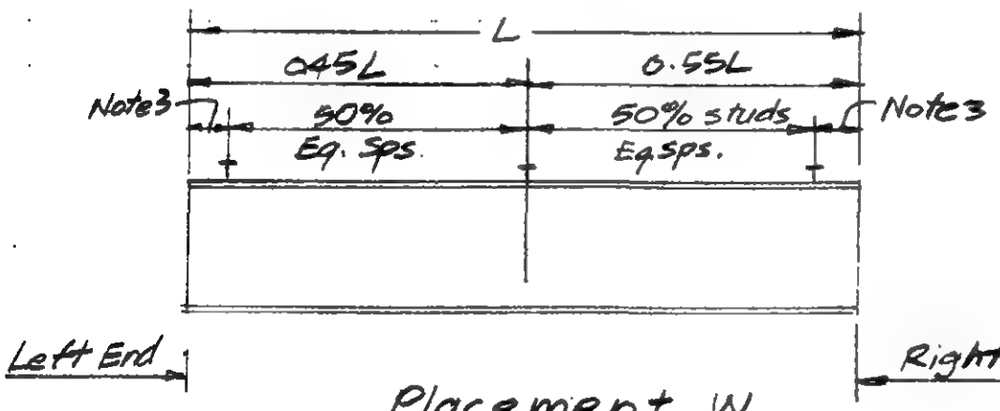

Placement W.

DRAWN
REVIEWED

9-AB3-1.4

SKILLING, HELLE, CHRISTIANSEN, ROBERTSON — Structural & Civil Engineers

PROJECT THE WORLD TRADE CENTER | TITLE FL.107 - PH STUD DETAILS AT EXT. WALL-FL.107 | DATE 4-1-70

VISIONS

9-15-70

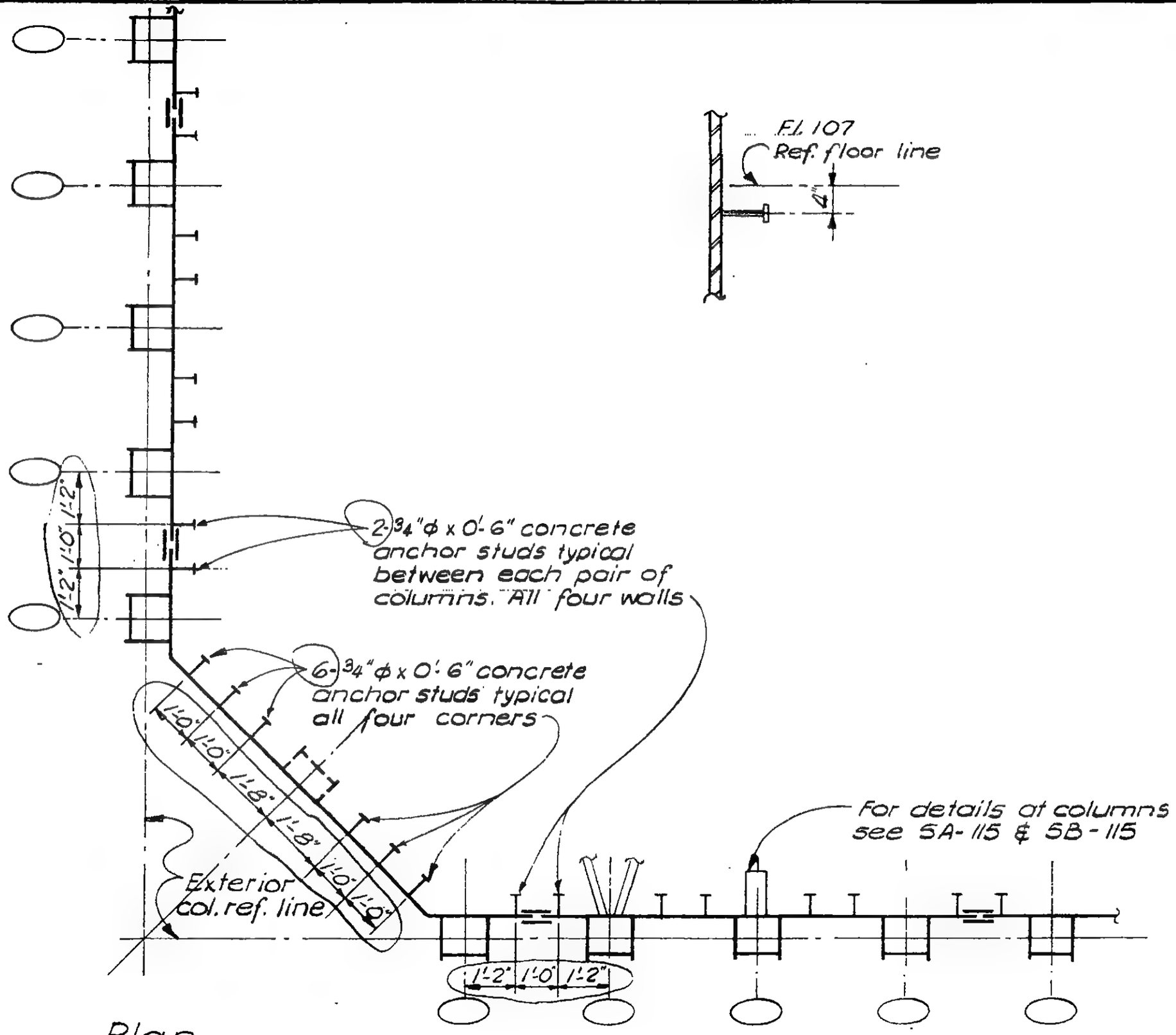

Plan

TYPICAL ARRANGEMENT OF ANCHOR DETAILS AT EXTERIOR WALL OF BUILDING

LICENSED PROFESSIONAL ENGINEER LESLIE E. ROBERTSON No 34960 UNIVERSITY OF THE STATE OF NEW YORK

DESIGNED

DRAWN M. Nichols

REVIEWED

9-AB 3-2

SKILLING, HELLE, CHRISTIANSEN, ROBERTSON — Structural & Civil Engineers

PROJECT: THE WORLD TRADE CENTER | TITLE: FL107-PH STUD DETAILS AT EXT. WALL-FL108 | DATE: 4-1-70

	SIONS
	9-15-70

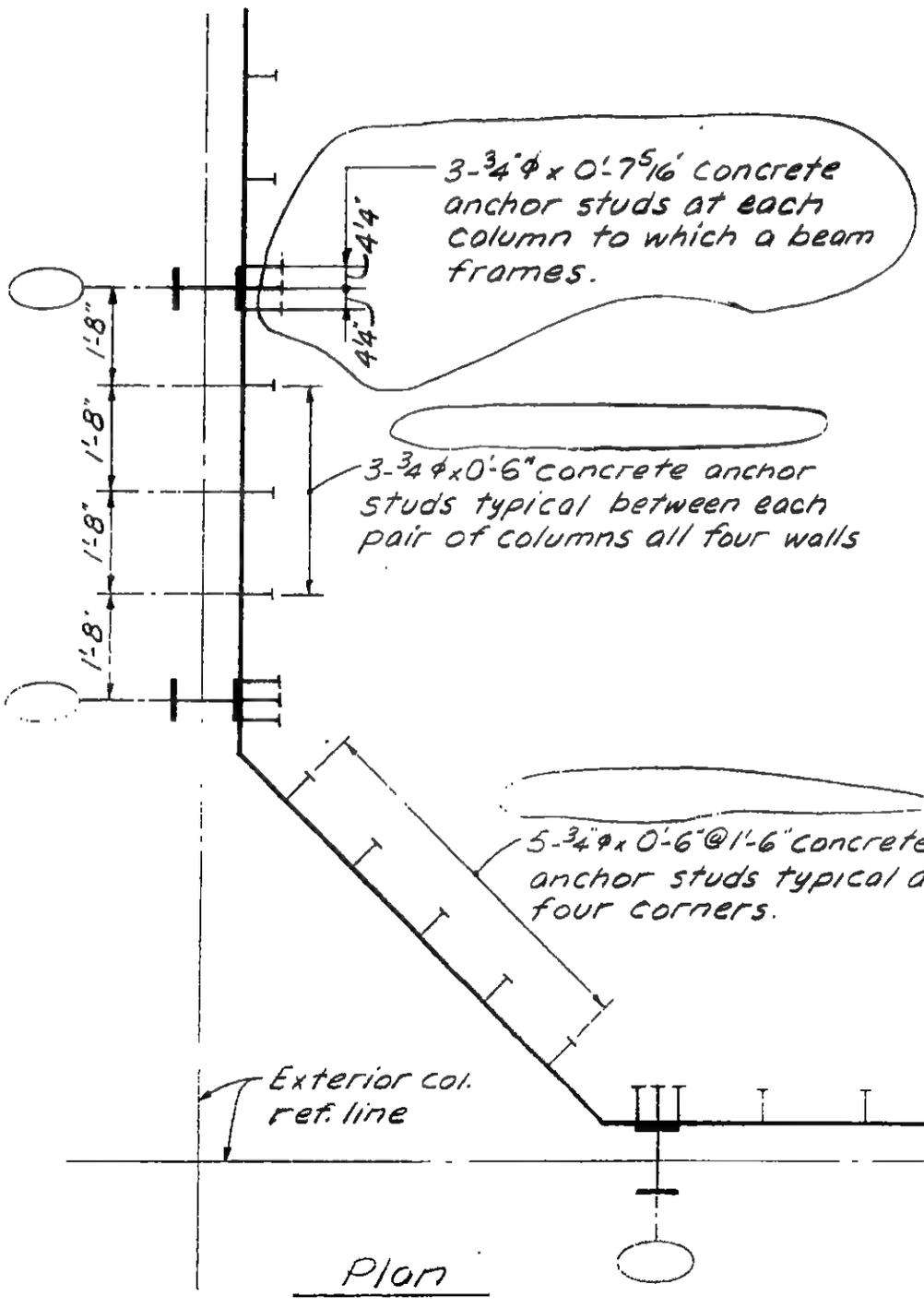

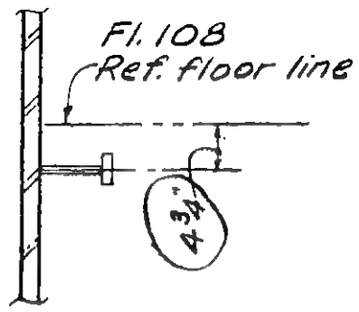

TYPICAL ARRANGEMENT OF ANCHOR DETAILS AT EXTERIOR WALL OF BUILDING

9-AB3-3

PROFESSIONAL ENGINEER — LIE E. ROBERTSON — No. 34360 — OF THE STATE OF NEW YORK

DESIGNED

DRAWN
CHO/S

SKILLING, HELLE, CHRISTIANSEN, ROBERTSON — Structural & Civil Engineers

PROJECT: THE WORLD TRADE CENTER | TITLE: FL 107 PH STUD DETAILS AT EXT. WALL FL 110 | DATE: 9-16-70

VISIONS

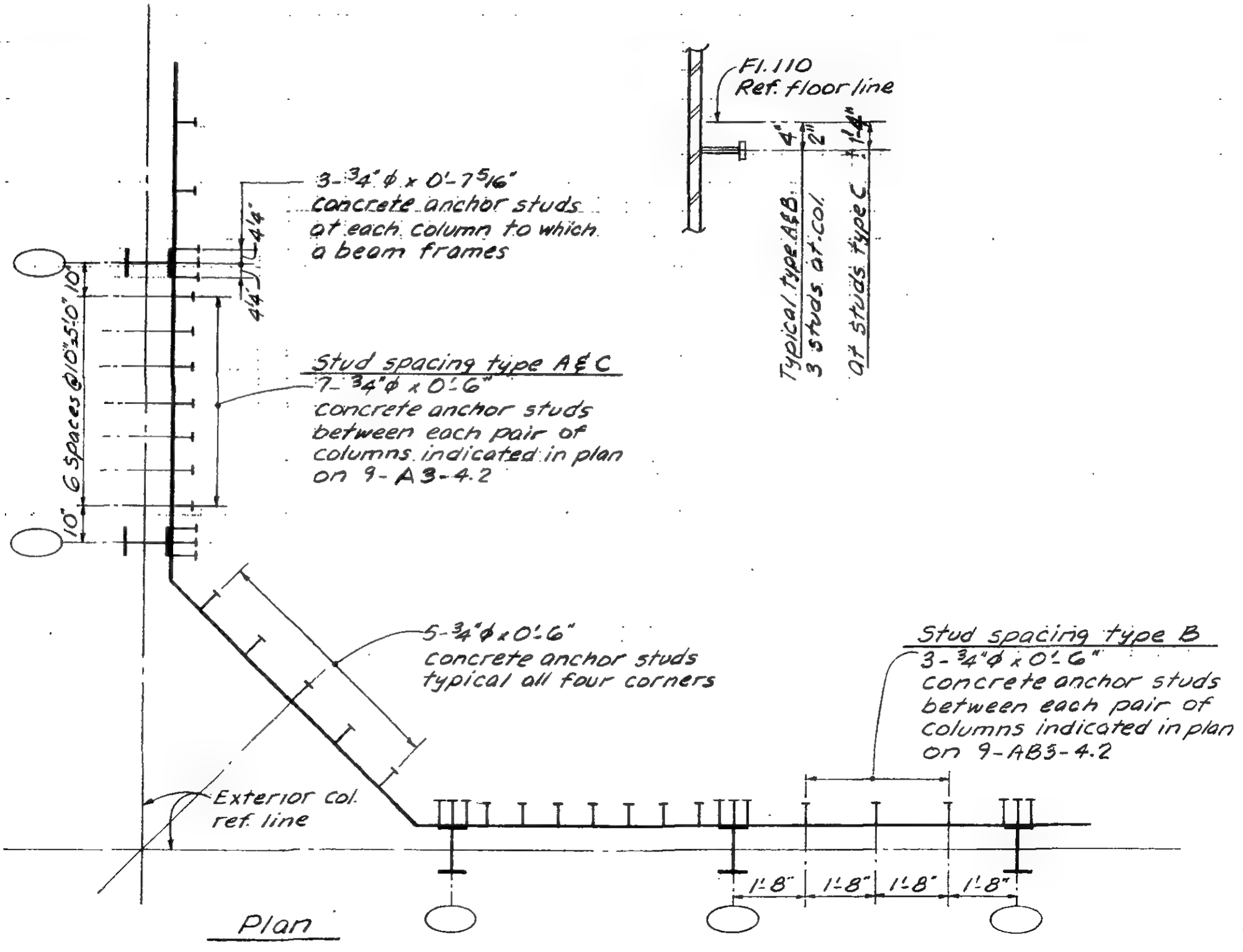

LICENSED PROFESSIONAL ENGINEER LESLIE E. ROBERTSON No 34360 STATE OF NEW YORK

DESIGNED

DRAWN A. FRANQUI

REVIEWED

TYPICAL ARRANGEMENT OF ANCHOR DETAILS AT EXTERIOR WALL OF BUILDING

9-AB3-4.1

SKILLING, HELLE, CHRISTIANSEN, ROBERTSON — Structural & Civil Engineers

PROJECT: THE WORLD TRADE CENTER

TITLE: FL. 107-PH. STUD DETAILS AT EXT. WALL-FL. 110

DATE: 9-15-70

REVISIONS

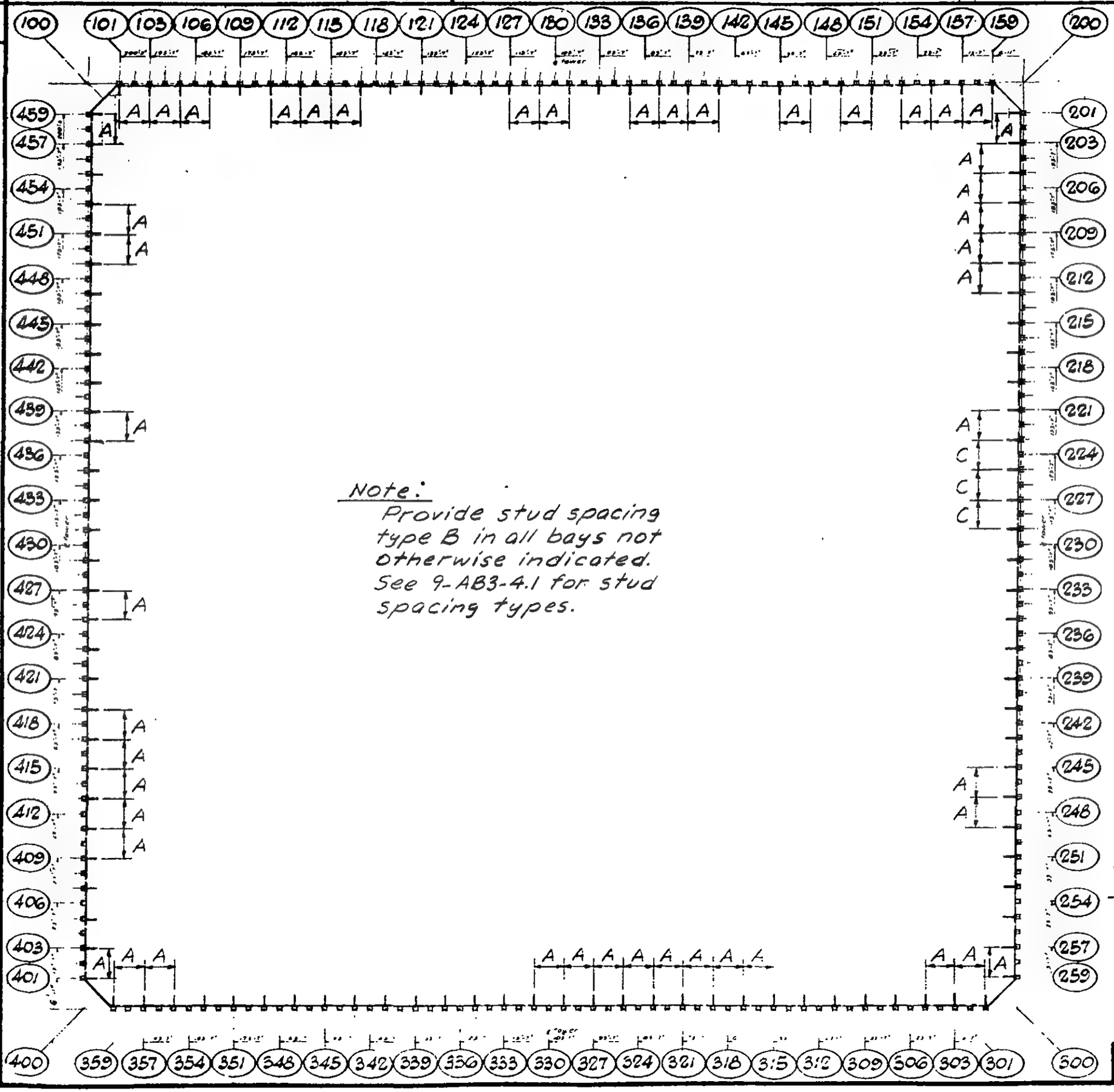

NORTH

TOWER A

Note:
Provide stud spacing type B in all bays not otherwise indicated. See 9-AB3-4.1 for stud spacing types.

KEY PLAN
FLOOR 110

DRAWN
A. FRANQUI

REVIEWED

9-A3-4.2

SKILLING, HELLE, CHRISTIANSEN, ROBERTSON — Structural & Civil Engineers

PROJECT THE WORLD TRADE CENTER | TITLE FLOOR TOT-PA MEMBER TYPES - BOLT UP | DATE 4-1-70

REVISIONS

5-27-70
7-13-70

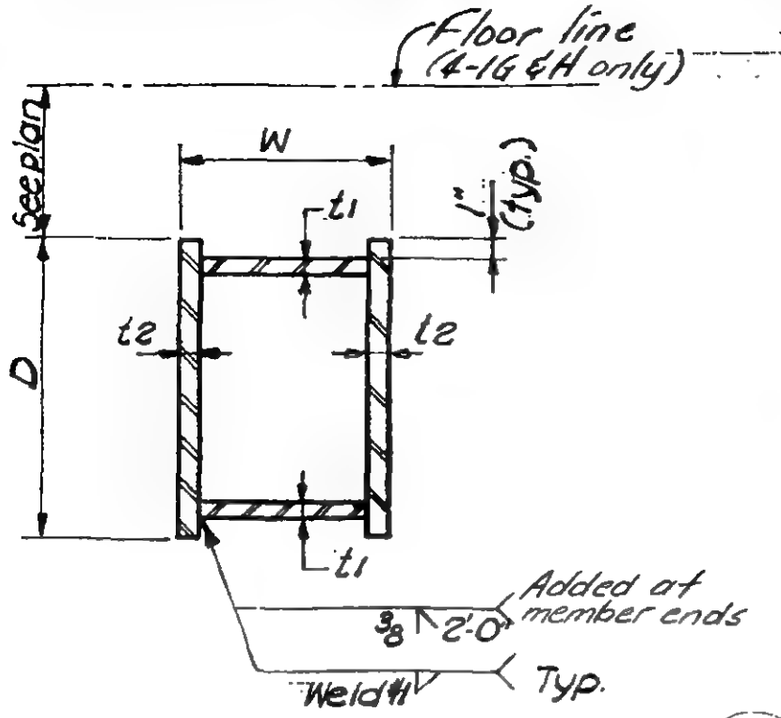

Type: 4-1A, B, C, D, G, H & J

Schedule							
Type	D(in)	W(in)	t1(in)	t2(in)	Fy(ksi)	Weld #1	Remarks
4-1A	26	18	1	3/4	50	3/8	Note 1
4-1B	26	18	1	3/4	50	3/8	Note 1
4-1C	30	18	1	3/4	50	3/8	Note 1
4-1D	30	18	1	3/4	50	3/8	Note 1
4-1E	16	5½	3/8	3/4	36	1/4	4-1.2
4-1F	27	5½	3/8	1/2	36	1/4	4-1.2
4-1G	35	15	1 3/4	1/2	50	3/8	4-1.2
4-1H	35	15	3/4	1/2	50	5/16	4-1.2
4-1J	12	5½	3/4	3/4	36	5/16	Note 1

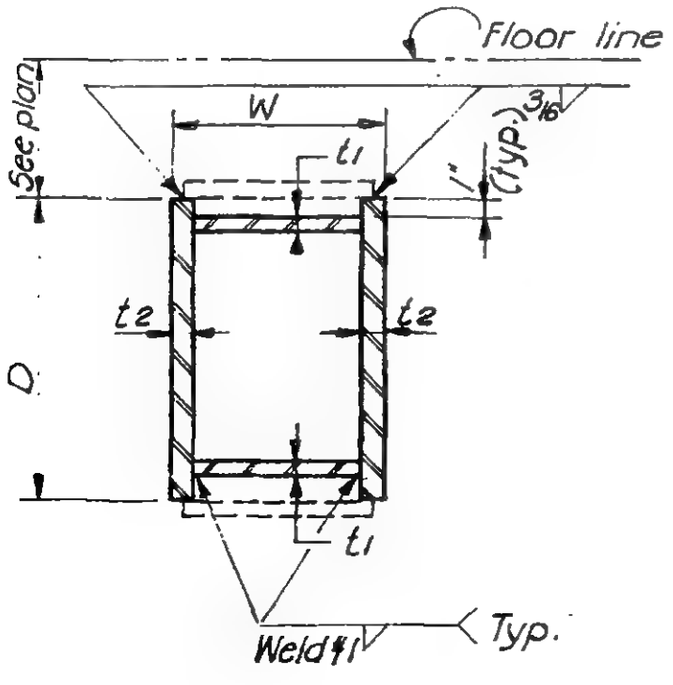

Type: 4-1E & F

Note 1. See SA-401, 402, 403 & 404 for elevations

LICENSED PROFESSIONAL ENGINEER
LESLIE E. ROBERTSON
No. 34960
UNIVERSITY OF THE STATE OF NEW YORK

DESIGNED
R. Patel
DRAWN
Nichols
REVIEWED
E. Dykers

9-AB4-1.1

SKILLING, HELLE, CHRISTIANSEN, ROBERTSON — Structural & Civil Engineers

PROJECT THE WORLD TRADE CENTER | TITLE FL. 107-PH. MEMBER TYPES - BUILT UP | DATE 4-1-70

REVISIONS

5-27-70

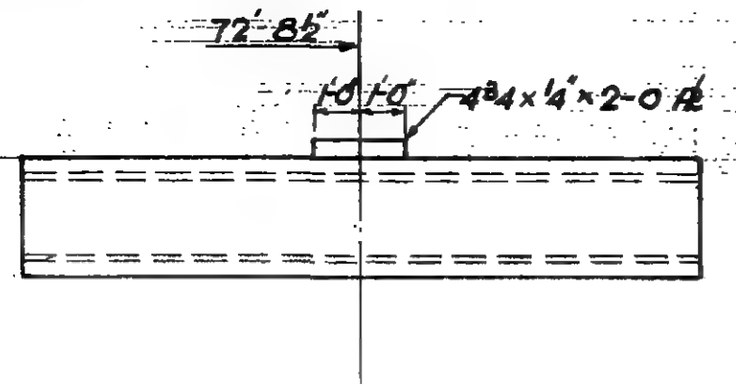

Type 4-1E

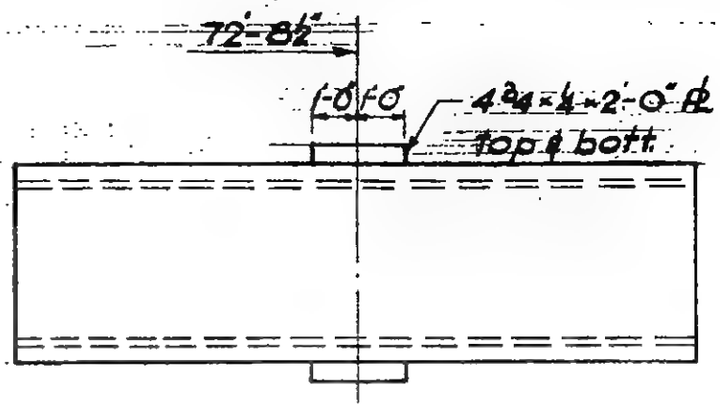

Type 4-1F

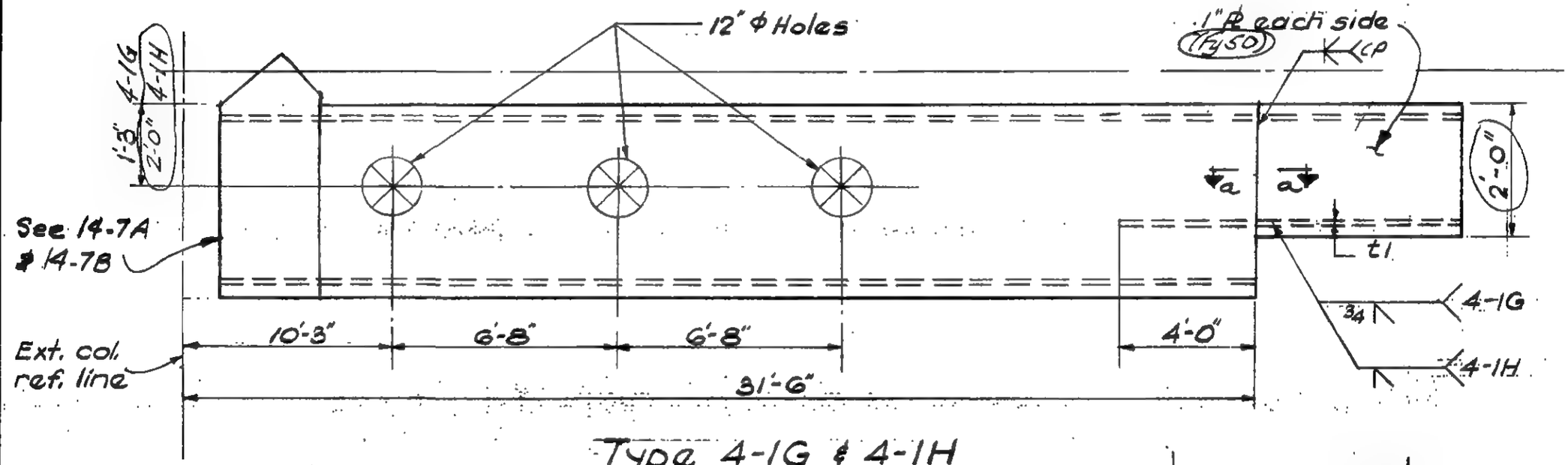

Type 4-1G & 4-1H

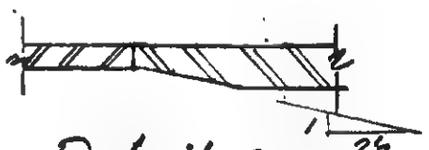

Detail a-a

LICENSED PROFESSIONAL ENGINEER — LESLIE E. ROBERTSON — No. 34860 — UNIVERSITY OF THE STATE OF NEW YORK

DESIGNED A. Patel

DRAWN D. Huggins

REVIEWED E. Dracos

9-AB4-1.2

SKILLING, HELLE, CHRISTIANSEN, ROBERTSON — Structural Engineers

PROJECT THE WORLD TRADE CENTER | TITLE FL. 107 PH MEMBER TYPES + BUILT UP | DATE 12-21-70

VISIONS
5-27-70
6-15-70
6-17-70
12-14-70
12-21-70

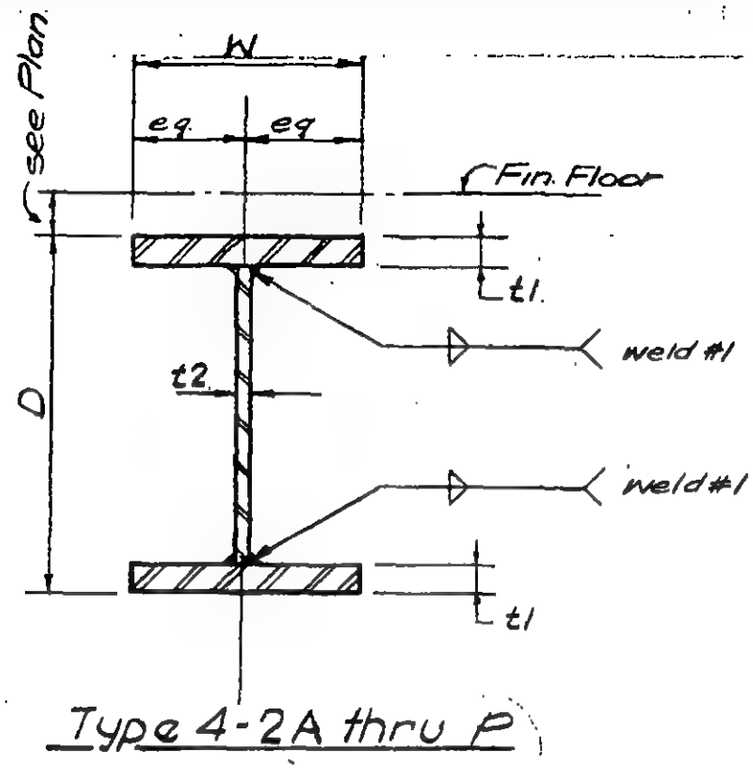

Type 4-2A thru P

Type	D (in)	W (in)	t1 (in)	t2 in	Fy (ksi)	Weld #1	Remarks
4-2A	30	5½	2¼	½	36	⅜	
4-2B	30	5½	2¼	½	36	⅜	
4-2C	30	10	1½	¾	36	⅜	
4-2D	43	5	1¾	1½	36	⅜	13-10
4-2E	16	5	1	⅜	36	¼	
4-2F	30	5½	1½	⅜	36	5/16	
4-2G	21	9	2	⅝	36	⅜	
4-2H	21	9	1½	⅝	36	⅜	
4-2K	27	10	1½	¾	50	⅜	
4-2M	40	12	2¼	¾	50	⅜	4-2.2
4-2N	20	14	2½	¾	36	½	
4-2P	20	12	1½	⅝	36	⅜	
4-2W	27	9	1	⅝	50	⅜	—
4-2X	35	14	1¾	¾	50	⅜	4-2.2
4-2Y	35	14	1¾	¾	50	⅜	4-2.2
4-2Z	35	14	1¾	¾	50	⅜	4-2.2

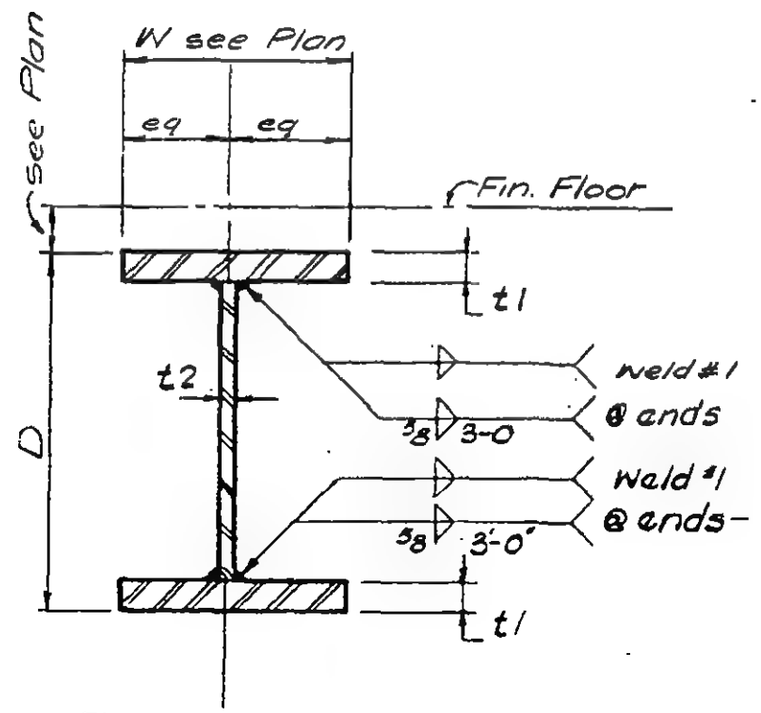

Type 4-2W, X, Y, Z

LICENSED PROFESSIONAL ENGINEER — LESLIE E. ROBERTSON — No. 34360 — UNIVERSITY OF THE STATE OF NEW YORK

DESIGNED A. Patel
DRAWN W.C.
REVIEWED E. Drawos

9-AB4-2.1

SKILLING, HELLE, CHRISTIANSEN, ROBERTSON — Structural & Civil Engineers

PROJECT THE WORLD TRADE CENTER | TITLE FL 107 - PH. MEMBER TYPES - BUILT UP | DATE 4-1-70

REVISIONS
5-27-70
12-14-70

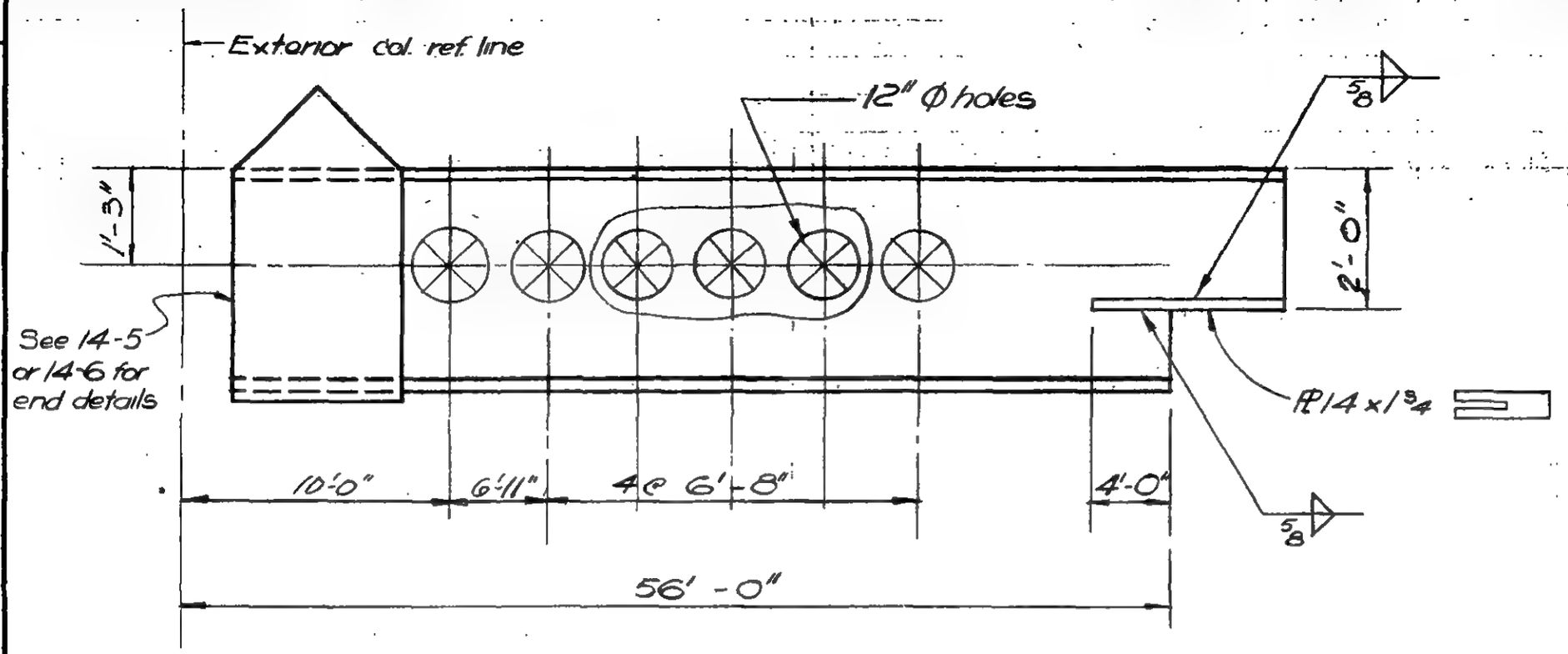

TYPE 4-2X, 4-2Y, 4-2Z

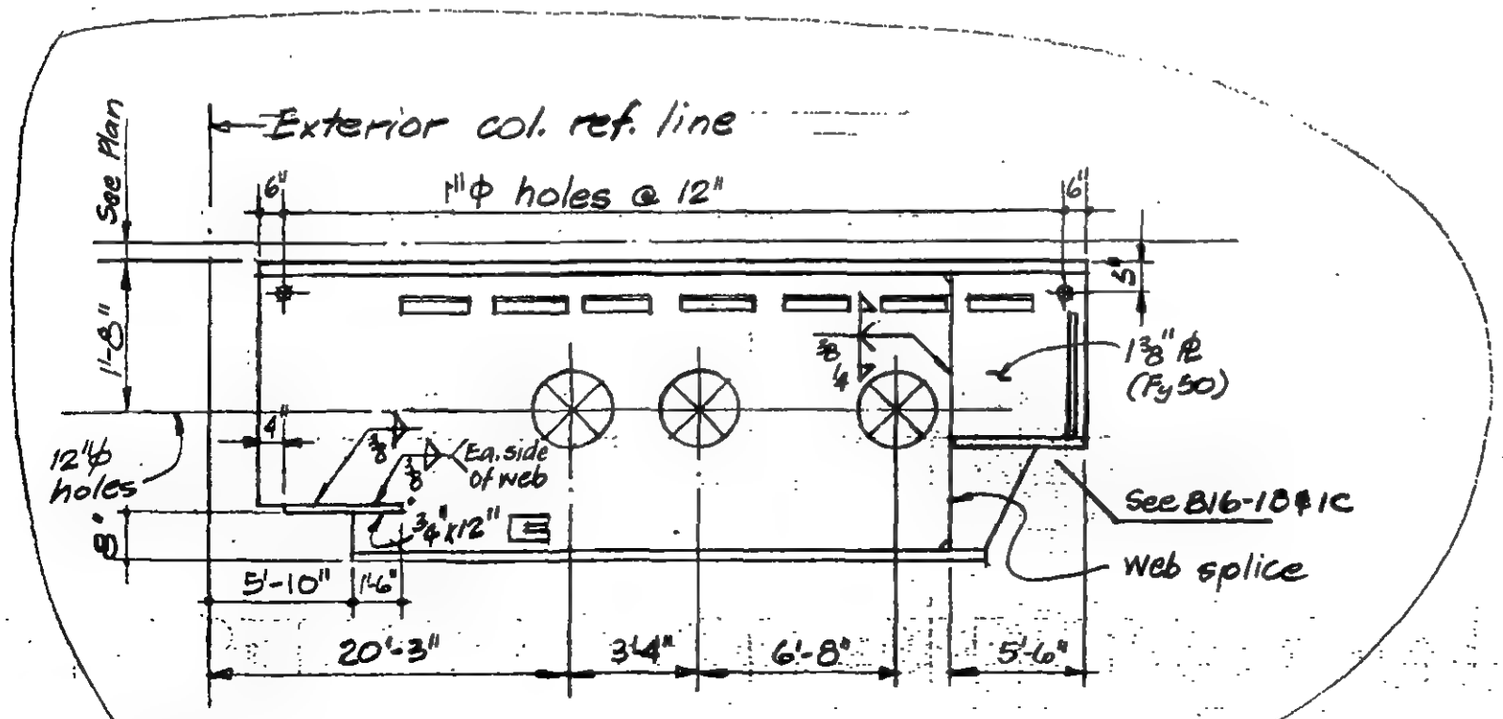

TYPE 4-2M

LICENSED PROFESSIONAL ENGINEER — LESLIE E. ROBERTSON — No. 34360 — UNIVERSITY OF THE STATE OF NEW YORK

DESIGNED A. Patel
DRAWN N. Clarke
REVIEWED E. Drakos

9-AB4-2-2

SKILLING, HELLE, CHRISTIANSEN, ROBERTSON — Structural & Civil Engineers

PROJECT THE WORLD TRADE CENTER | TITLE FL. 107 - PH MEMBER TYPES - BUILT UP | DATE 4-1-70

REVISIONS

5-27-70

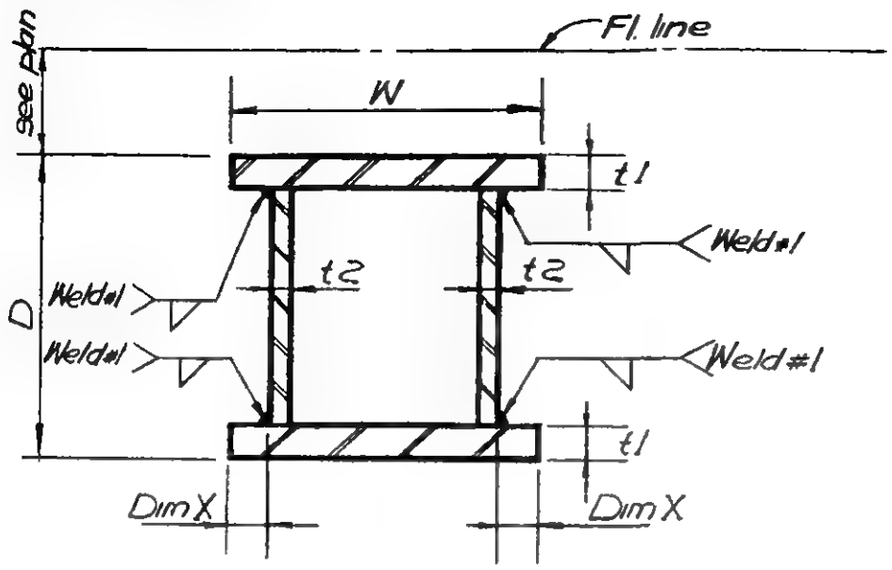

Type	D(in)	W(in)	t1(in)	t2(in)	Fy(ksi)	Weld#1	Dim X (in)	Remarks
4-3A	30	5'2	1'4	3/4	36	5/16	1	
4-3B	30	5'2	1'4	3/4	36	5/16	1	
4-3C	See 9-AB13-9							
4-3D	30	5'2	1'2	3/4	36	3/8	1	

LICENSED PROFESSIONAL ENGINEER
LESLIE E. ROBERTSON
No. 34960
UNIVERSITY OF THE STATE OF NEW YORK

DESIGNED A. Patel

DRAWN W. Clarke

REVIEWED

SKILLING, HELLE, CHRISTIANSEN, ROBERTSON — Structural & Civil Engineers

PROJECT THE WORLD TRADE CENTER | TITLE FL. 107 - PH. MEMBER TYPES - ROLLED SHAPE | DATE 4-1-70

REVISIONS

5/27/70
7/8/70

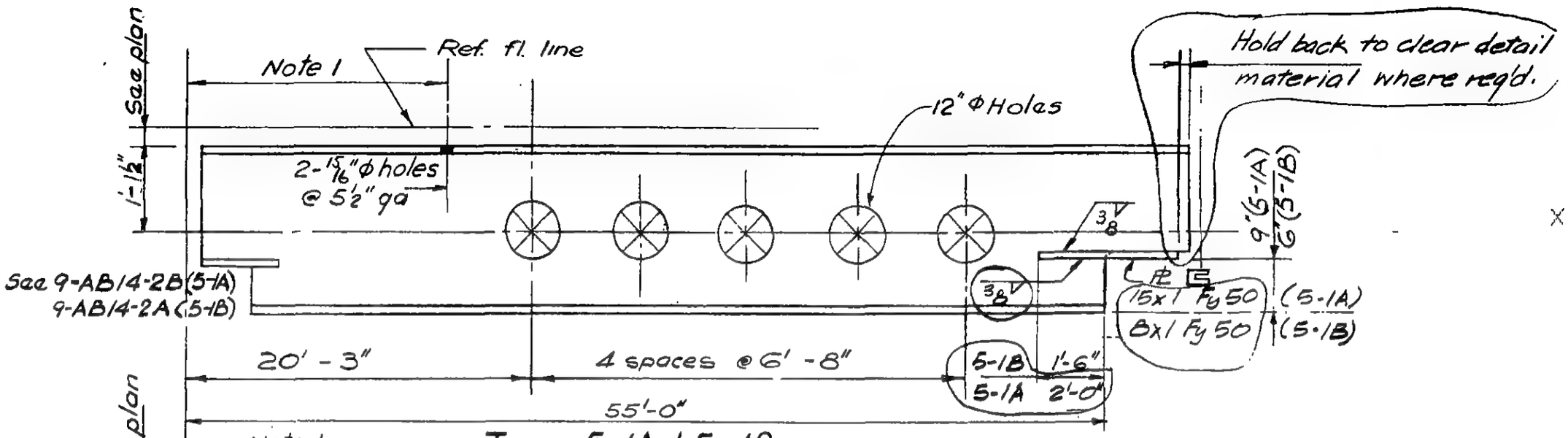

Type 5-1A & 5-1B

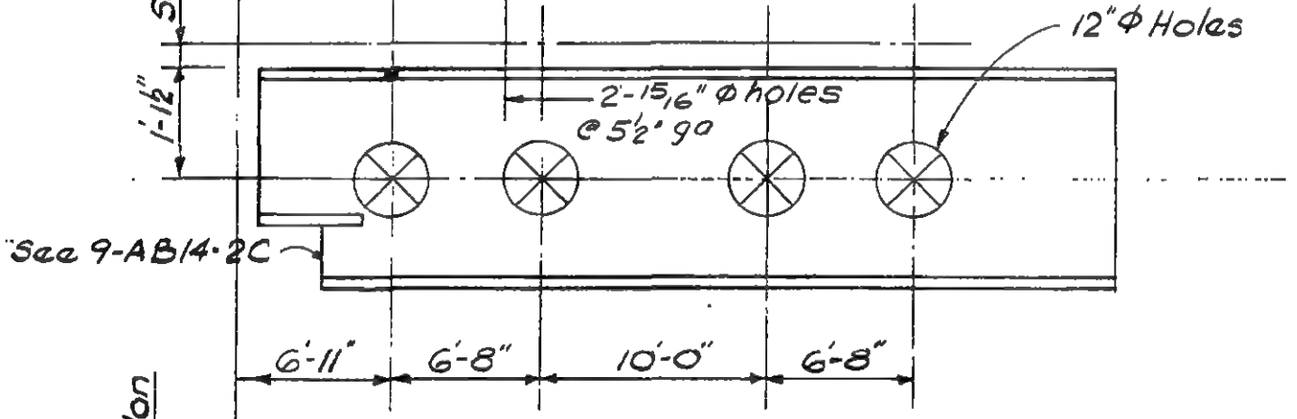

Type 5-1C

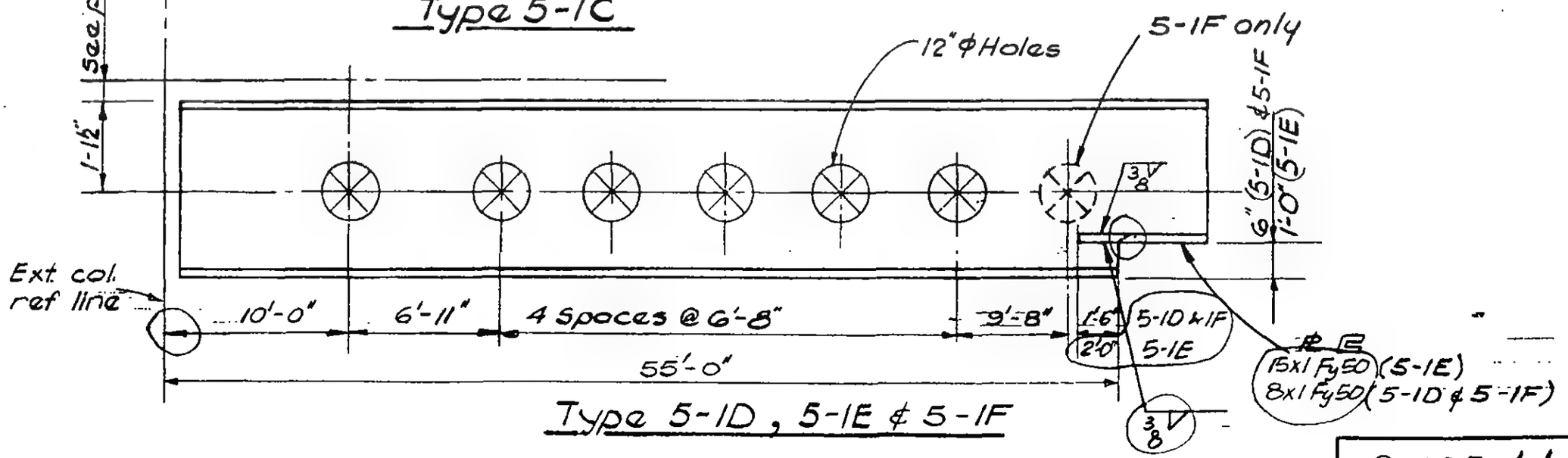

Type 5-1D, 5-1E & 5-1F

Note 1. Locate to accomodate erector's temporary bracing.

LICENSED PROFESSIONAL ENGINEER — LESLIE E. ROBERTSON — No. 34960 — UNIVERSITY OF THE STATE OF NEW YORK

DESIGNED

DRAWN W. Clarke

REVIEWED

9-AB5-1.1

SKILLING, HELLE, CHRISTIANSEN, ROBERTSON — Structural & Civil Engineers

PROJECT THE WORLD TRADE CENTER | TITLE FL. 107-P.H. MEMBER TYPES | DATE 4-1-70

REVISIONS

6/15/70
7/15/70

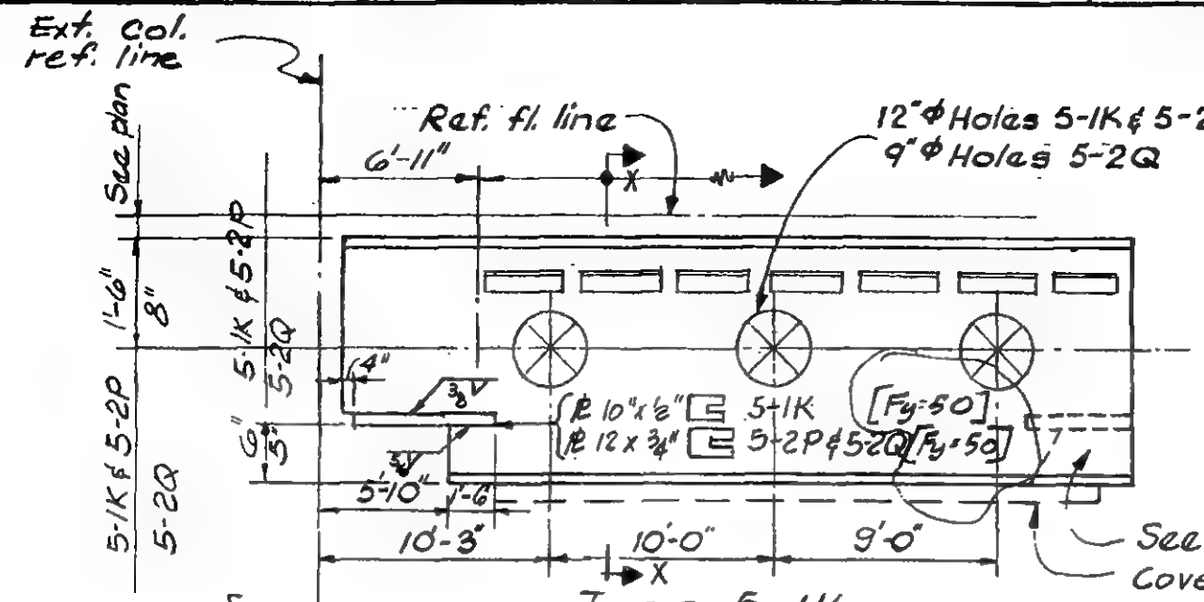

Type 5-1K
Type 5-2P & 5-2Q as noted

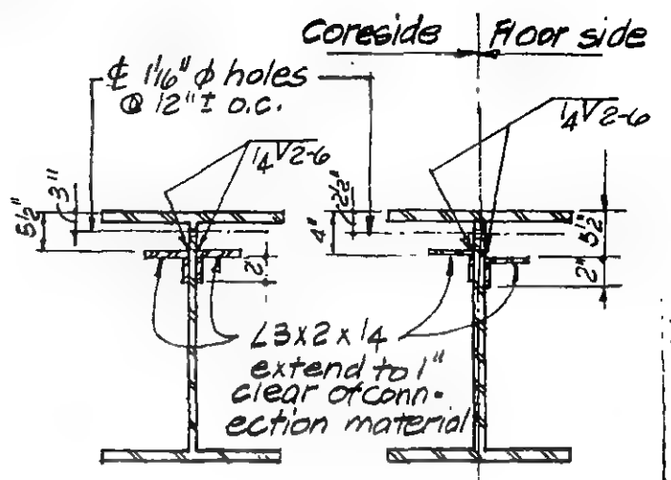

Section X-X

Type 5-1R

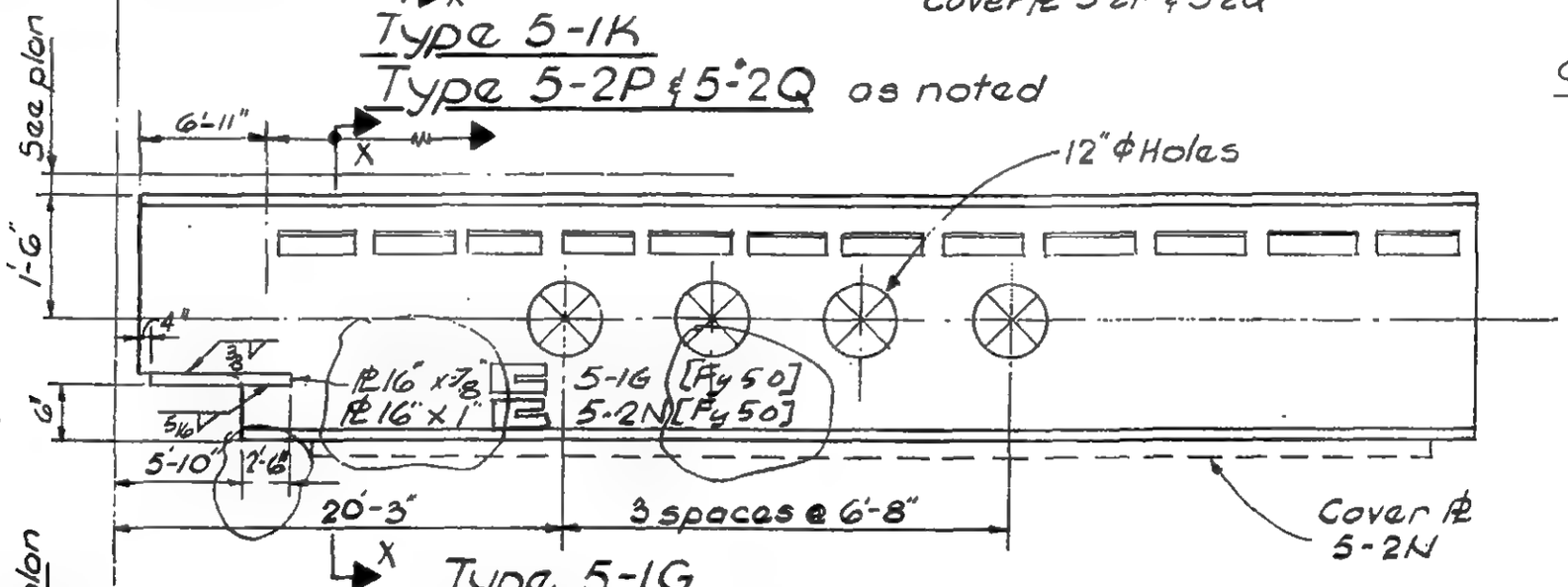

Type 5-1G
Type 5-2N as noted

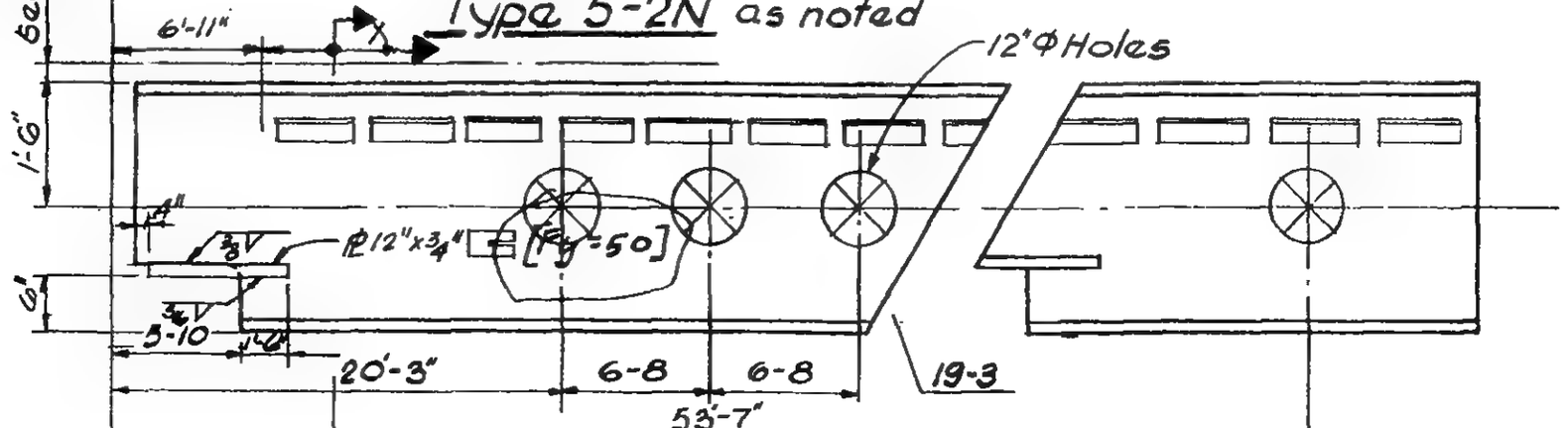

Type 5-1H

Type 5-1J

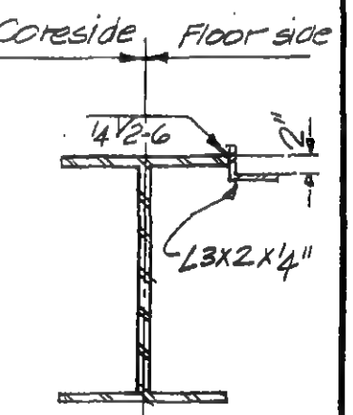

Type 5-1Q

LICENSED PROFESSIONAL ENGINEER
LESLIE E. ROBERTSON
No. 34360
UNIVERSITY OF THE STATE OF NEW YORK

DESIGNED

DRAWN D. Huggins

REVIEWED

9-AB5-1.2

SKILLING, HELLE, CHRISTIANSEN, ROBERTSON — Structural & Civil Engineers

PROJECT THE WORLD TRADE CENTER | TITLE FL. 107 - PH. MEMBER TYPES | DATE 4 - 1 - 70

REVISIONS

5-27-70
6-15-70
7-8-70
7-13-70
12-14-70

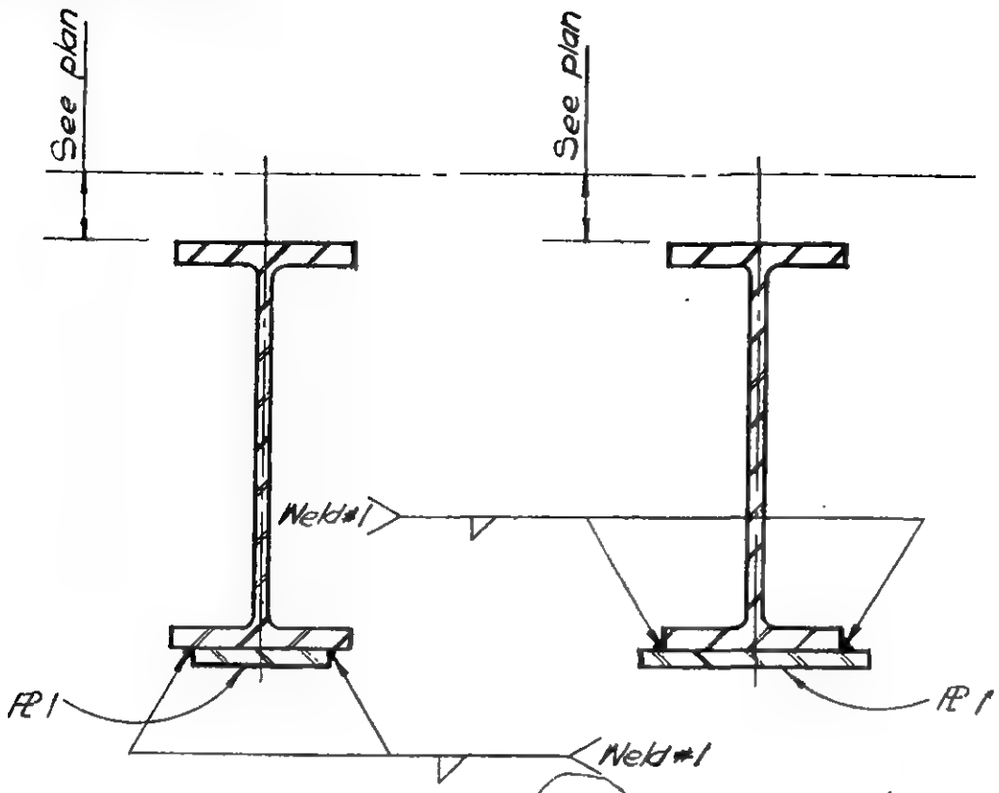

TYPE 5-2A thru N, R, S, T & U — TYPE 5-2P & Q

Type	Beam	PL 1	Length	Dim A	Weld #1	Remarks
5-2A	30WF132	7" x 1 3/4"	F.L.		3/8	Note 3
5-2B	30WF132	7" x 1 3/4"	F.L.		3/8	Note 3
5-2C	27WF114	8" x 1"	F.L.		3/8	
5-2D	27WF114	8" x 1"	F.L.		3/8	
5-2E	27WF94	7 1/2" x 7/8"	26'-0"		5/16	
5-2F	27WF102	8" x 7/8"	33'-0"	8'-0"	5/16	
5-2G	24WF160	10" x 1 1/2"	F.L.		7/16	
5-2H	24WF160	10" x 1 1/2"	F.L.		7/16	
5-2K	24WF94	7" x 3/4"	F.L.		5/16	
5-2M	24WF94	7" x 3/4"	F.L.		5/16	
5-2N	36WF230	14" x 1 3/4"	40'-0"		7/16	5-1.2
5-2P	36WF170	14" x 1 1/2"	24'-0"	5-1.2	3/8	5-1.2
5-2Q	21WF62	14" x 1/2"	24'-0"	5-1.2	5/16	5-1.2
5-2R	24WF120	10" x 1"	F.L.		3/8	
5-2S	21WF82	6 1/2" x 1/2"	13'-0"		5/16	Note 4
5-2T	16WF88	8" x 1/2"	24'-0"	5-4.1	5/16	5-4.1
5-2U	36WF230	14" x 1 3/4"	40'-0"		7/16	5-4.1

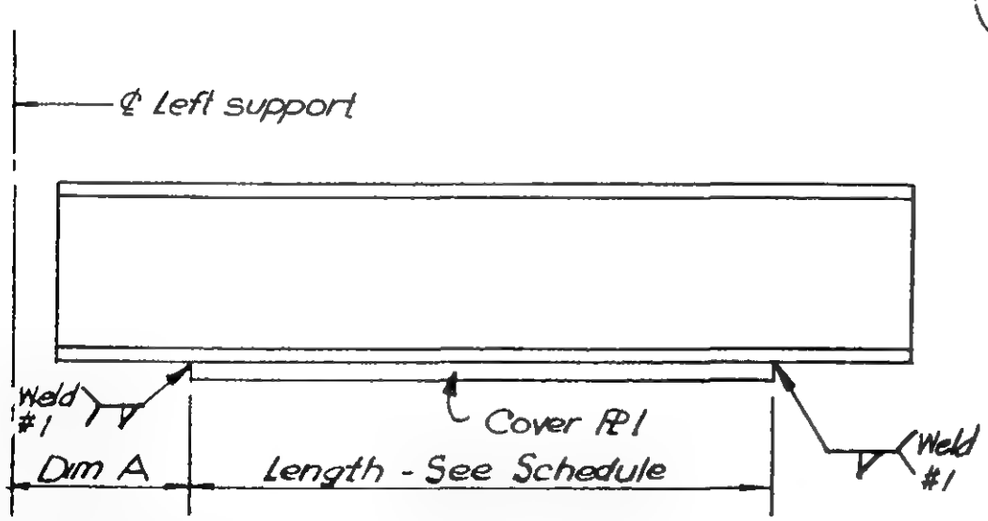

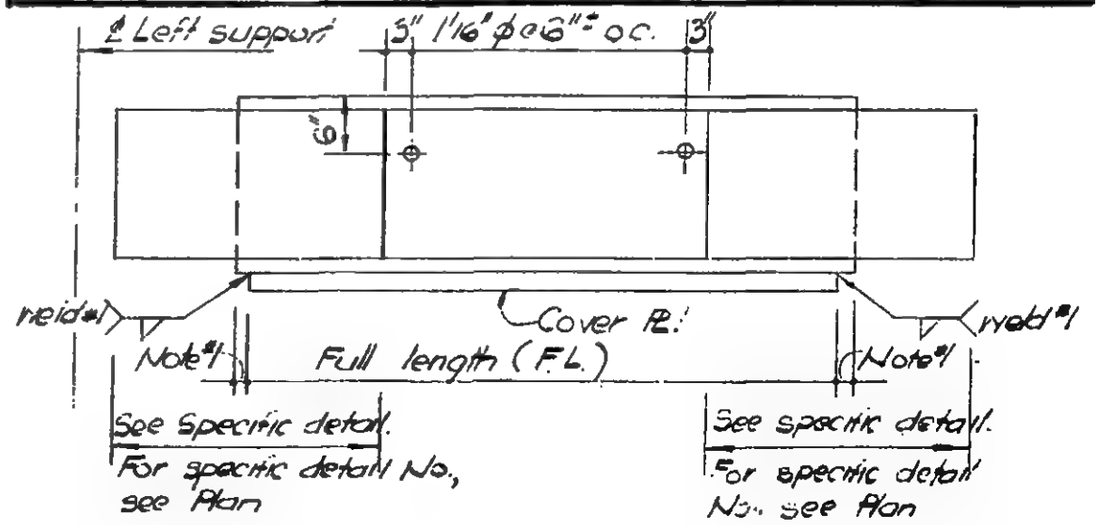

TYPE 5-2K, M & R

NOTES:
1. Where dim A not given, center cover PL on beam. Full length PLs (F.L. in Schedule) stop 1" clear of connection detail material each end.
2. PL 1 same Fy as beam. See Plan for Fy.
3. As fabricated Tower A 30WF116 with 8 1/2 x 1 3/4 F.L. PL 1
4. As fabricated Tower A substitution.

LICENSED PROFESSIONAL ENGINEER — LESLIE E. ROBERTSON — No. 34360 — UNIVERSITY OF THE STATE OF NEW YORK

DESIGNED

DRAWN N. Clarke

REVIEWED

9-AB5.2

SKILLING, HELLE, CHRISTIANSEN, ROBERTSON — Structural & Civil Engineers

PROJECT THE WORLD TRADE CENTER | TITLE FL. 107 - PH, MEMBER TYPES- FLOOR 107 | DATE 6-17-70

REVISIONS

7/8/70

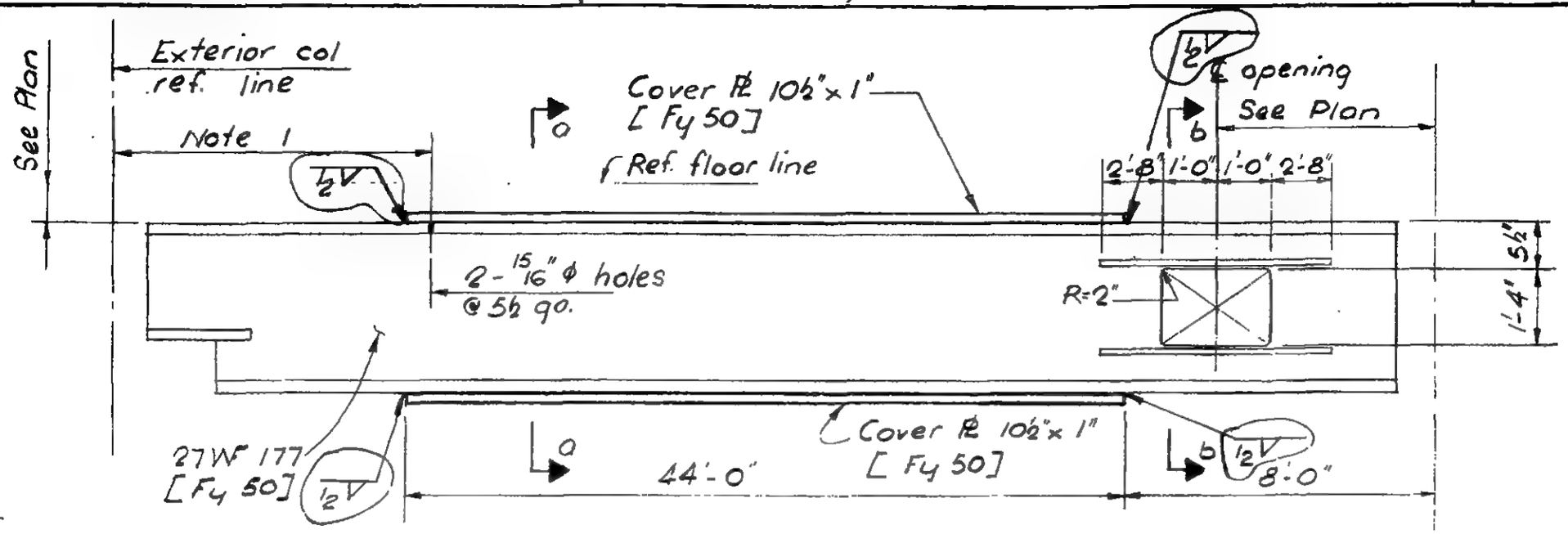

TYPE 5-3A

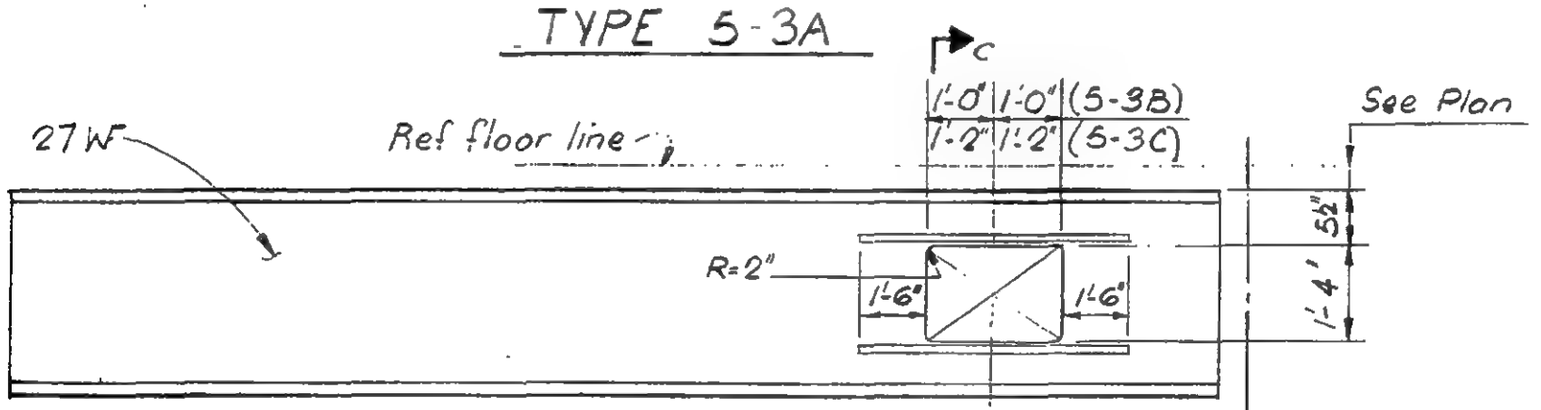

TYPE 5-3B
TYPE 5-3C

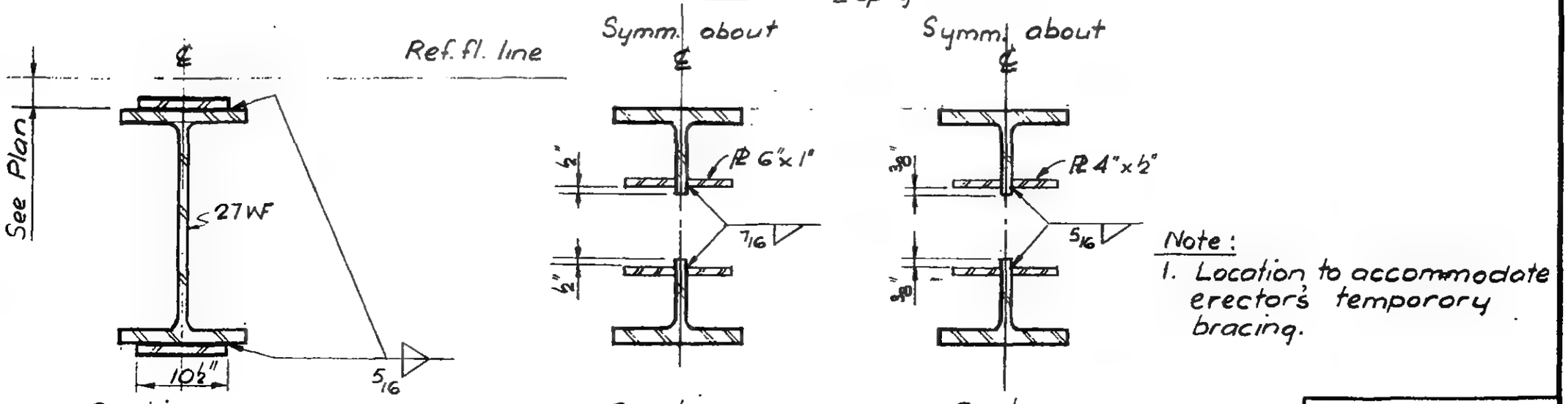

Note:
1. Location to accommodate erector's temporary bracing.

LICENSED PROFESSIONAL ENGINEER LESLIE E. ROBERTSON NO 34260 UNIVERSITY OF THE STATE OF NEW YORK

DESIGNED I. Ramani
DRAWN T. Terrelonge
REVIEWED

9-AB5-3

SKILLING, HELLE, CHRISTIANSEN, ROBERTSON — Structural & Civil Engineers

PROJECT THE WORLD TRADE CENTER | TITLE FL. 107-PH MEMBER TYPES | DATE 12-14-70

REVISIONS

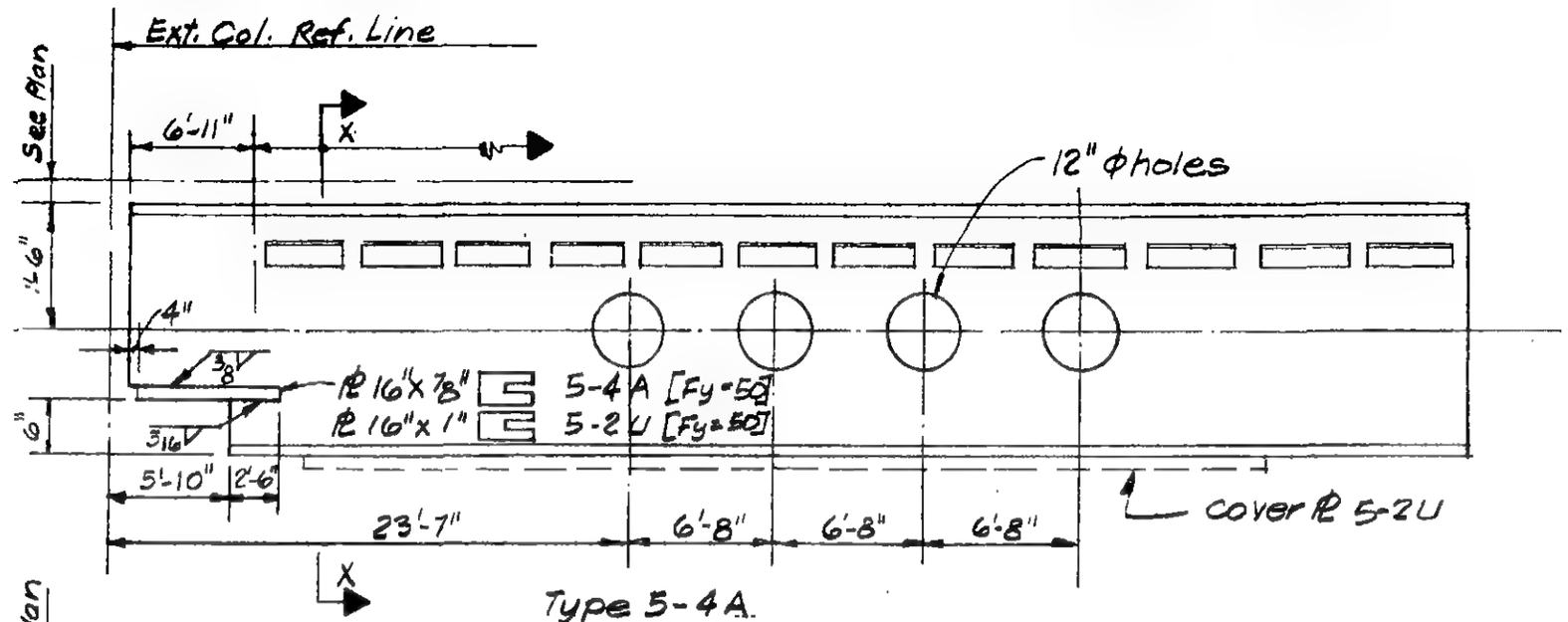

Type 5-4A

Type 5-2U as noted

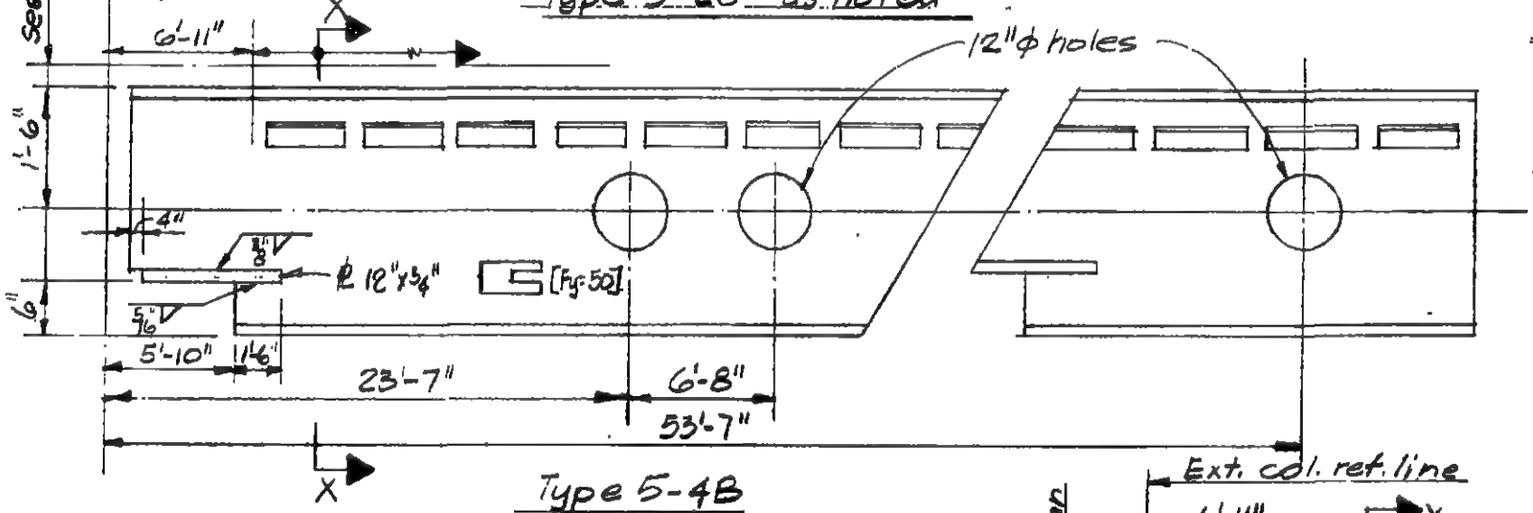

Type 5-4B

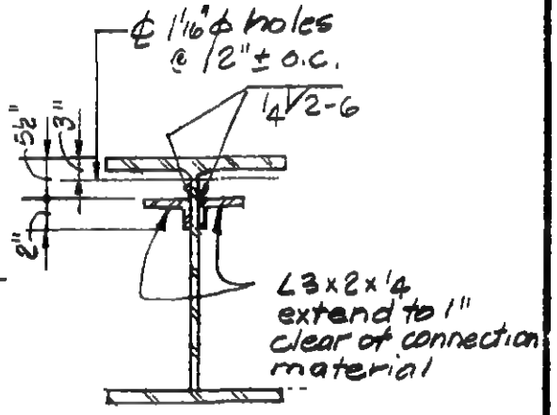

Section X-X

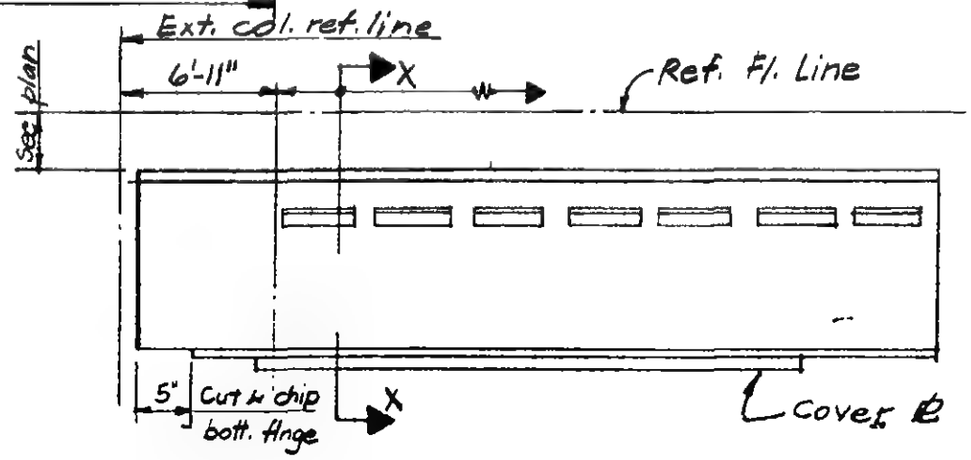

Type 5-2T

LICENSED PROFESSIONAL ENGINEER — LESLIE E. ROBERTSON — No. 34360 — UNIVERSITY OF THE STATE OF NEW YORK

DESIGNED

DRAWN

REVIEWED

9-B5-4.1

SKILLING, HELLE, CHRISTIANSEN, ROBERTSON — Structural & Civil Engineers

PROJECT: THE WORLD TRADE CENTER | TITLE: FL-107-PH MEMBER TYPES | DATE: 12-14-70

REVISIONS

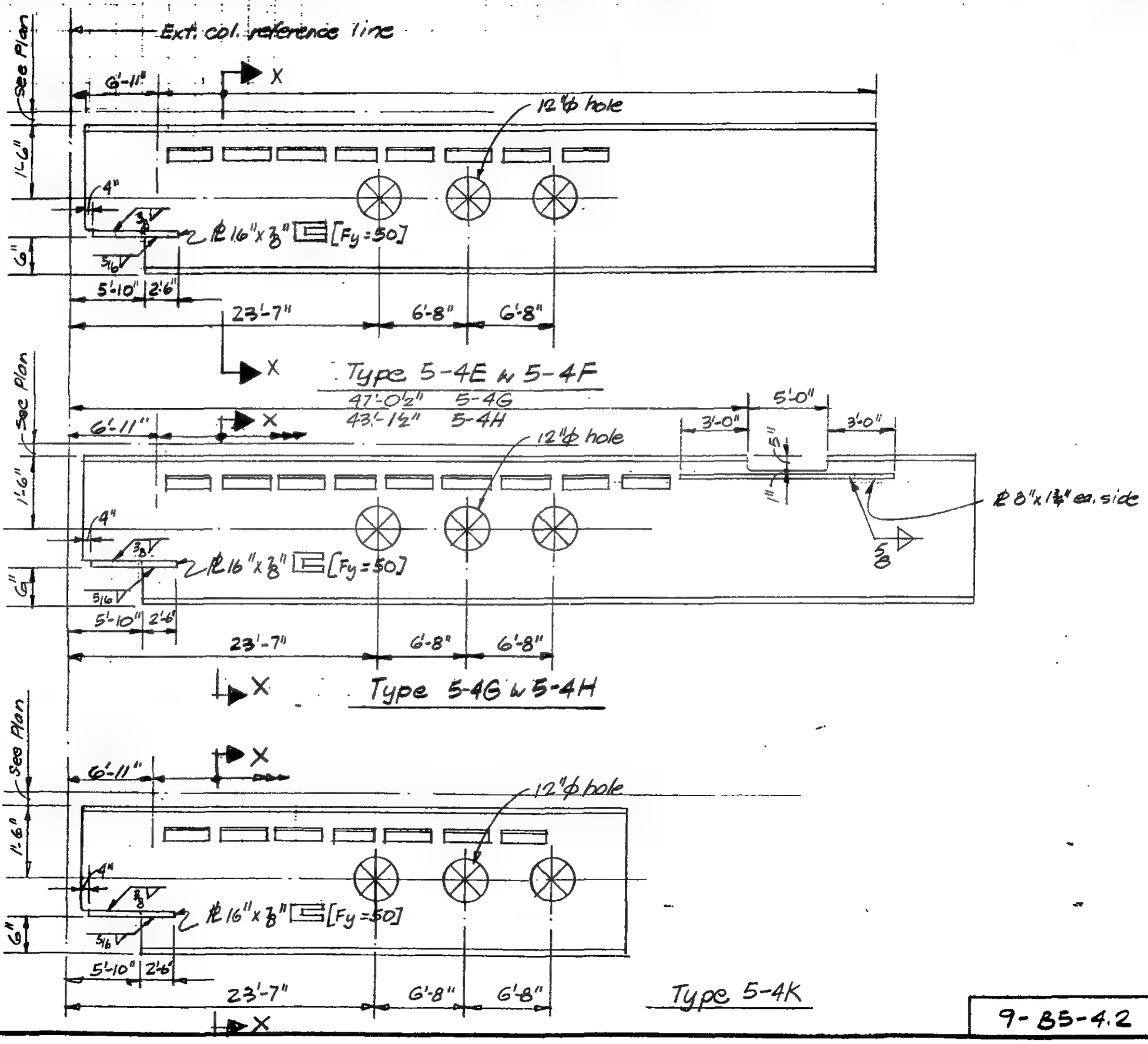

LICENSED PROFESSIONAL ENGINEER — LESLIE E. ROBERTSON — No. 34360 — UNIVERSITY OF THE STATE OF NEW YORK

DESIGNED

DRAWN

REVIEWED

9-B5-4.2

SKILLING, HELLE, CHRISTIANSEN, ROBERTSON — Structural & Civil Engineers

PROJECT THE WORLD TRADE CENTER | TITLE FL. 107-PH CONNECTIONS DETAILS - FL 107 | DATE 4-1-70

REVISIONS

5/27/70

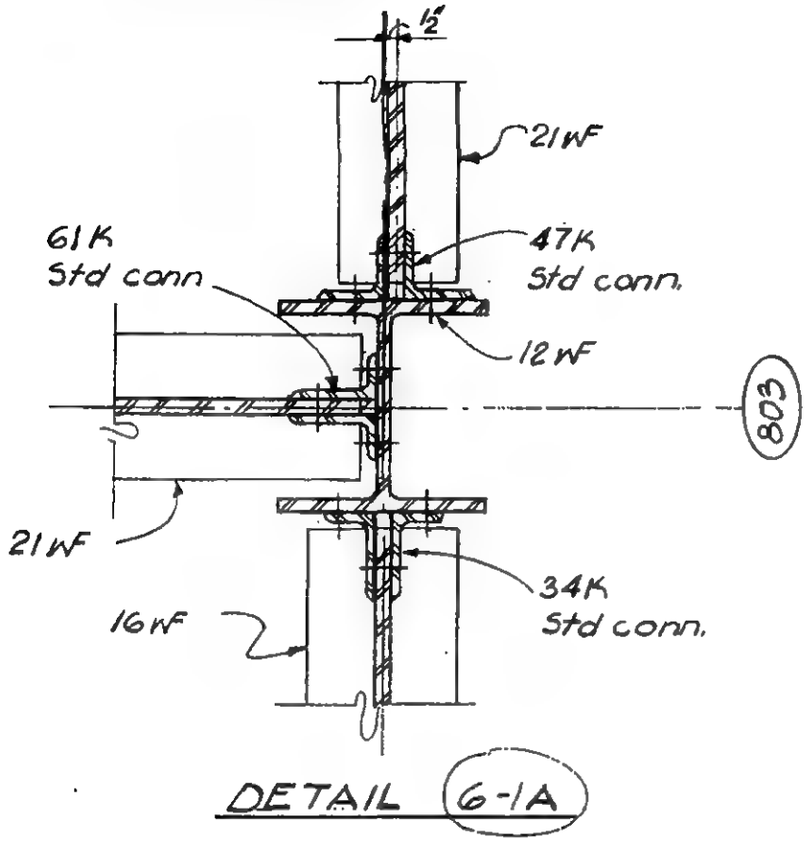

DETAIL 6-1A

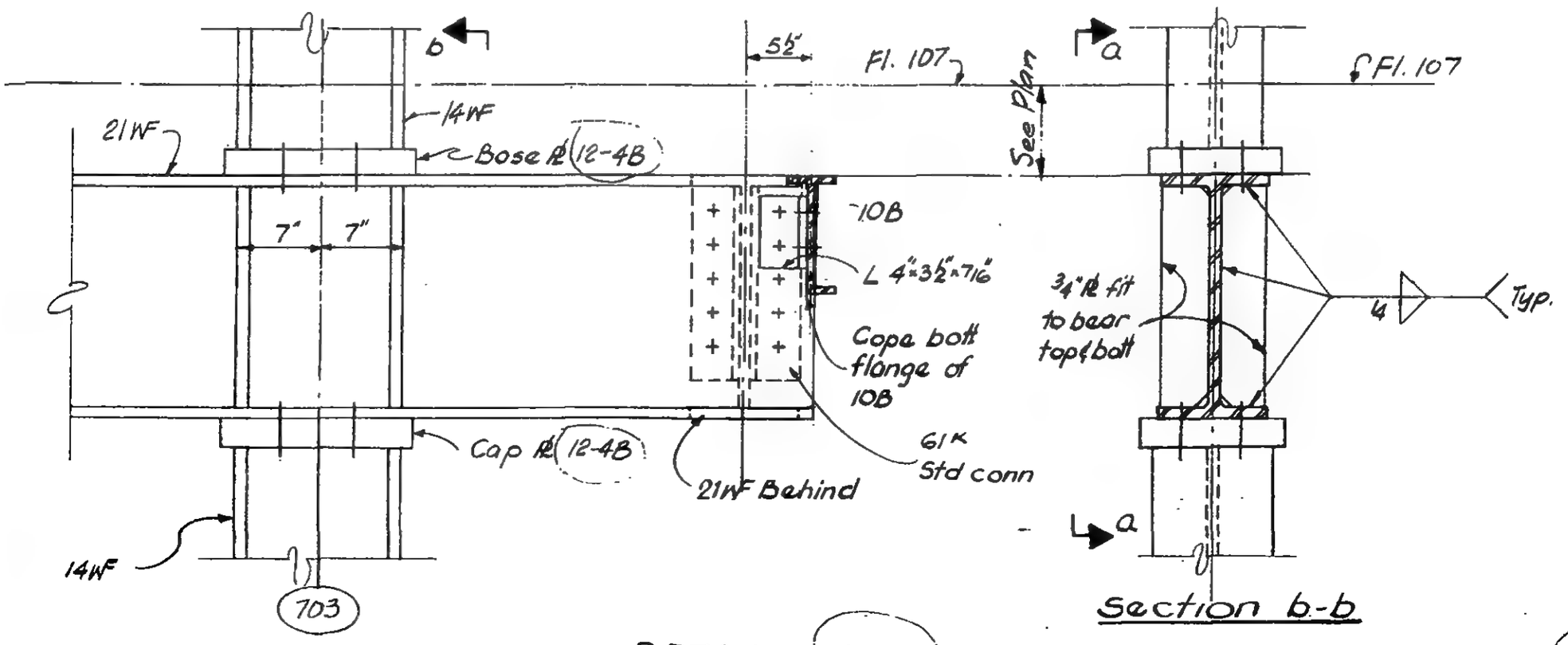

Section a-a

DETAIL 6-1B

Section b-b

LICENSED PROFESSIONAL ENGINEER — LESLIE E. ROBERTSON — No. 34360 — UNIVERSITY OF THE STATE OF NEW YORK

DESIGNED K. HWANG

DRAWN D. Huggins

REVIEWED E. Drakos

9-AB 6-1

SKILLING, HELLE, CHRISTIANSEN, ROBERTSON — Structural & Civil Engineers

PROJECT THE WORLD TRADE CENTER | TITLE FL. 107-PH CONNECTION DETAILS - FL 107 | DATE 4-1-70

REVISIONS

5/27/70
7/8/70

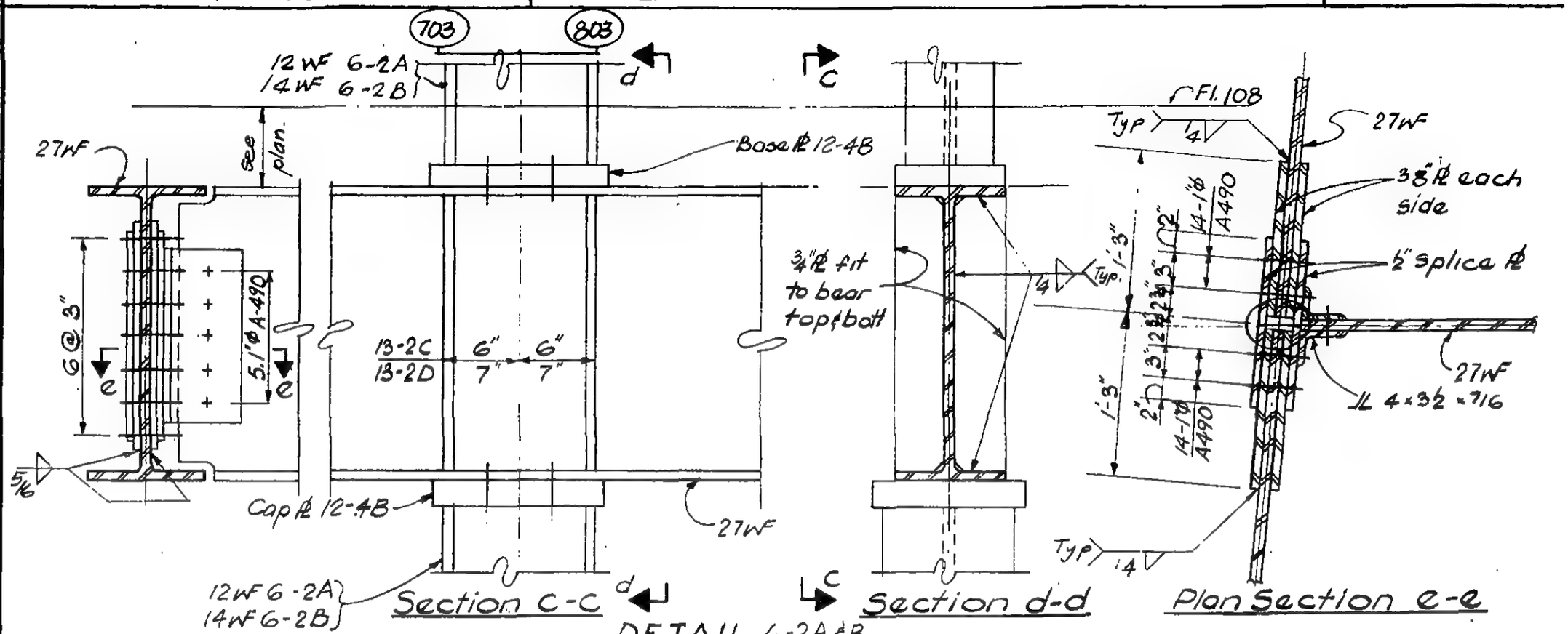

Section c-c — Section d-d — Plan Section e-e

DETAIL 6-2A&B

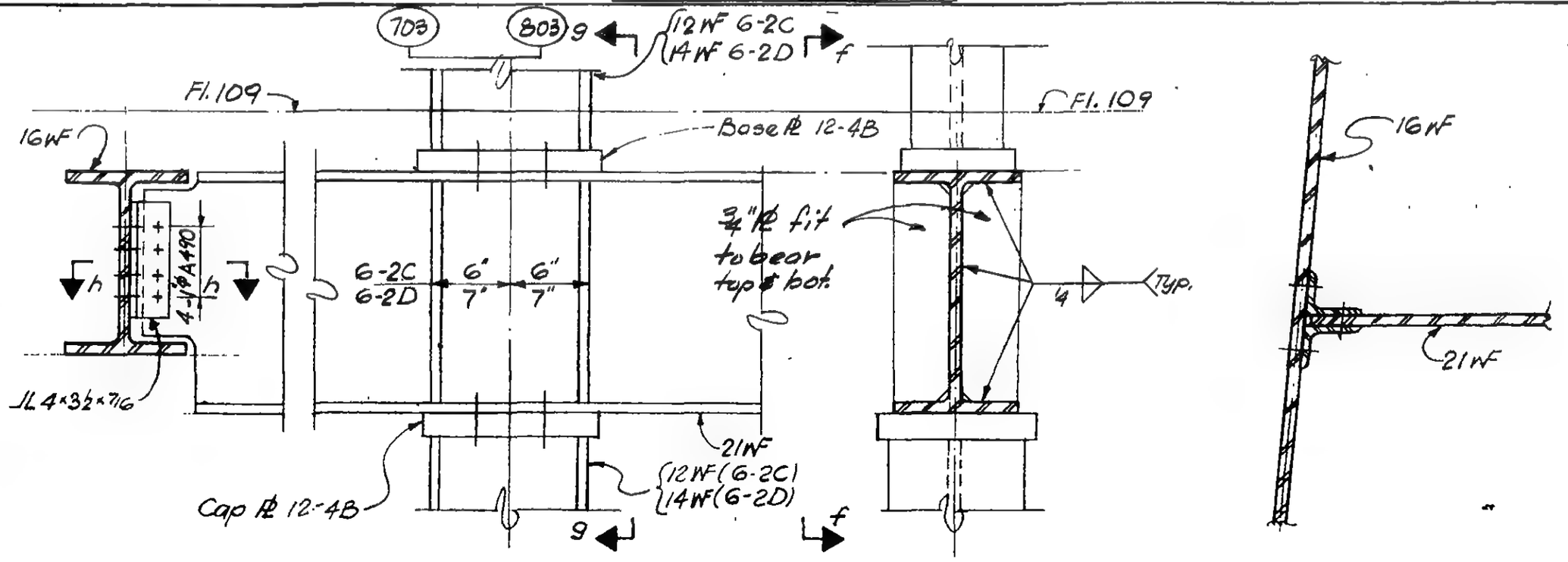

Section f-f — Section g-g — Plan Section h-h

DETAIL 6-2C&D

LICENSED PROFESSIONAL ENGINEER — LESLIE E. ROBERTSON — No. 34960 — UNIVERSITY OF THE STATE OF NEW YORK

DESIGNED K. Hwang
DRAWN D. Huggins
REVIEWED E. Drakos

9-AB 6-2

SKILLING, HELLE, CHRISTIANSEN, ROBERTSON — Structural & Civil Engineers

PROJECT THE WORLD TRADE CENTER | TITLE Fl. 107-PH CONNECTION DETAILS - FL 107 | DATE 4-1-70

REVISIONS

5/27/70
7/8/70

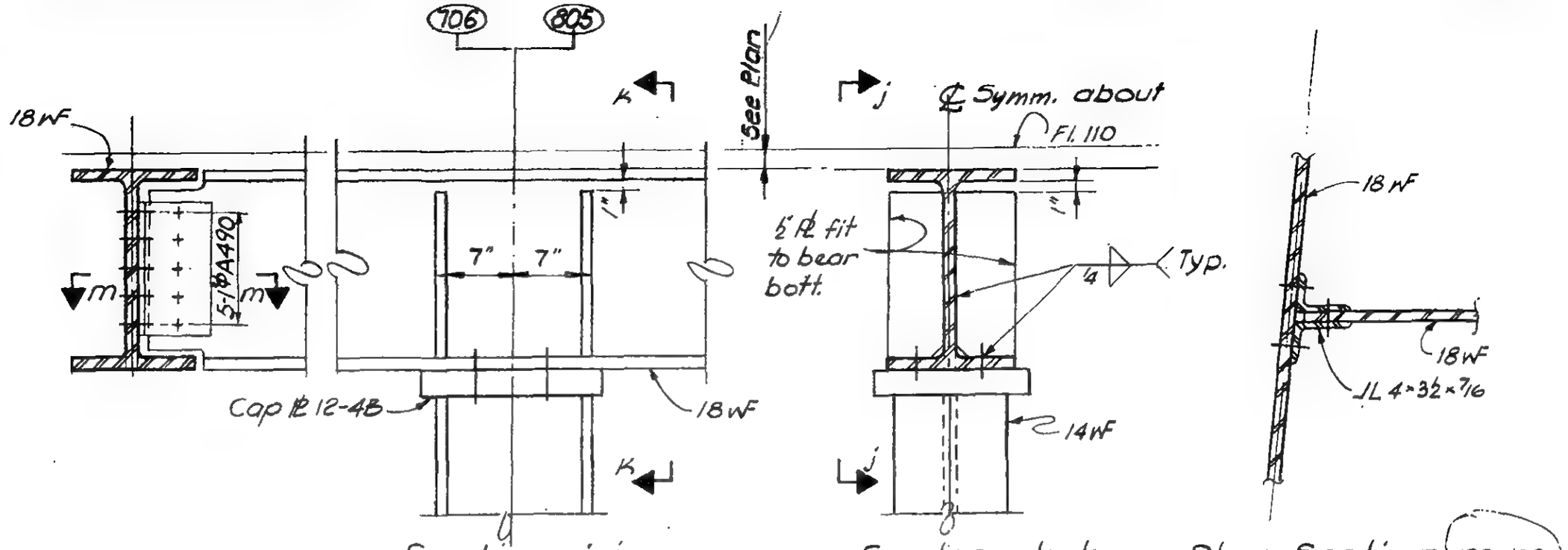

Section j-j — Section k-k — Plan Section m-m

DETAIL 6-3A & 3

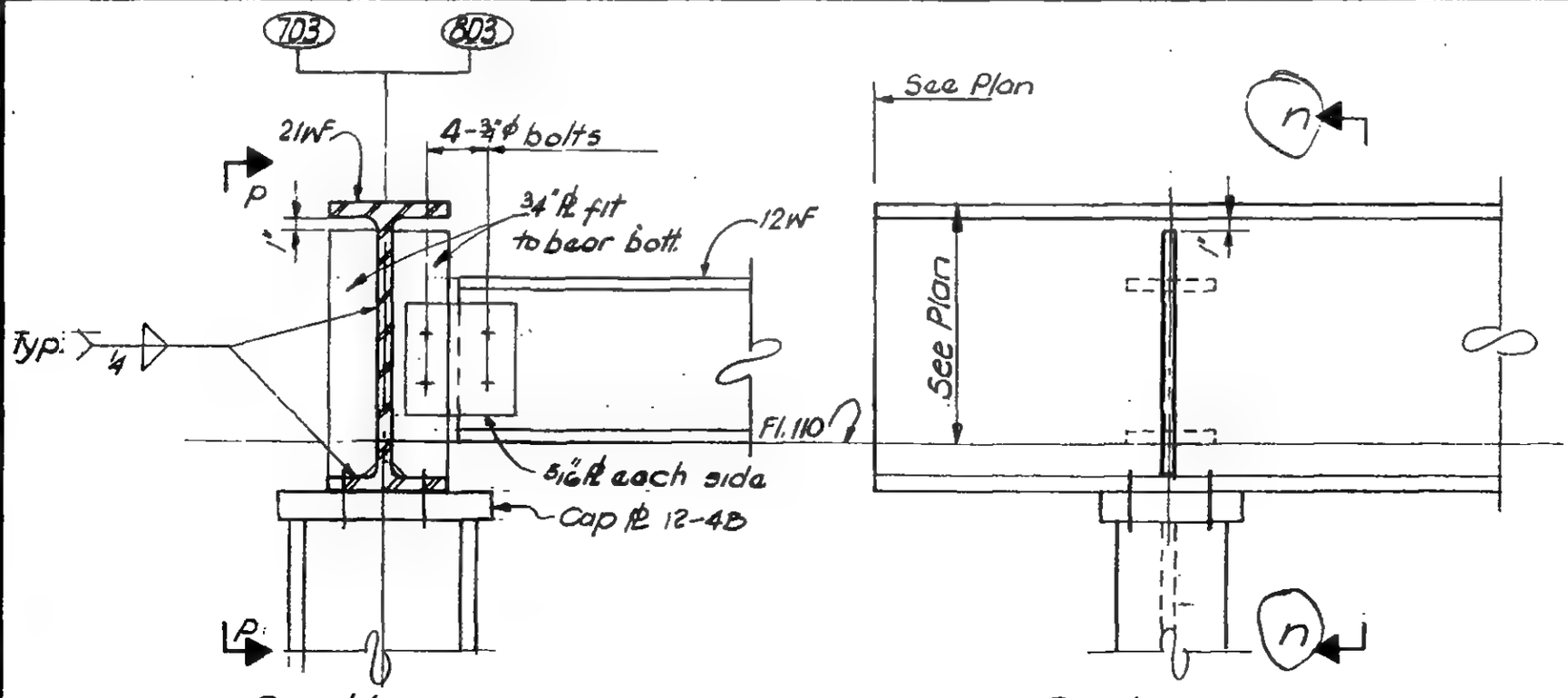

Section n-n — Section p-p

DETAIL 6-3C

LICENSED PROFESSIONAL ENGINEER — LESLIE E. ROBERTSON — No. 34360 — UNIVERSITY OF THE STATE OF NEW YORK

DESIGNED K. HWANG
DRAWN D. Huggins
REVIEWED E. Drakos

9-AB 6-3

SKILLING, HELLE, CHRISTIANSEN, ROBERTSON — Structural & Civil Engineers

PROJECT THE WORLD TRADE CENTER | TITLE Fl. 107 - PH CONNECTION DETAILS - FL 107 | DATE 4-1-70

PROVISIONS

5/27/70

6/17/70

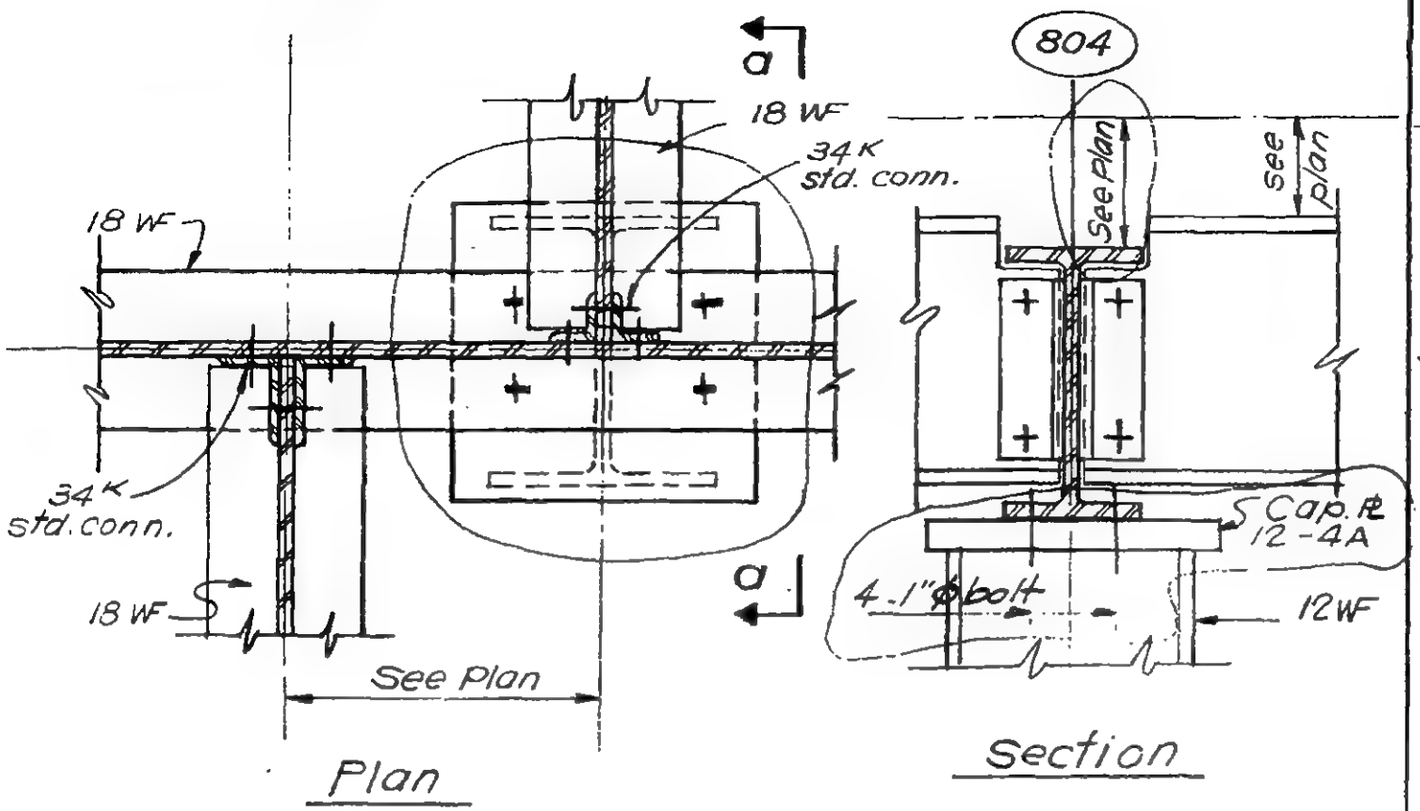

Plan

Section

DETAIL 6-4A

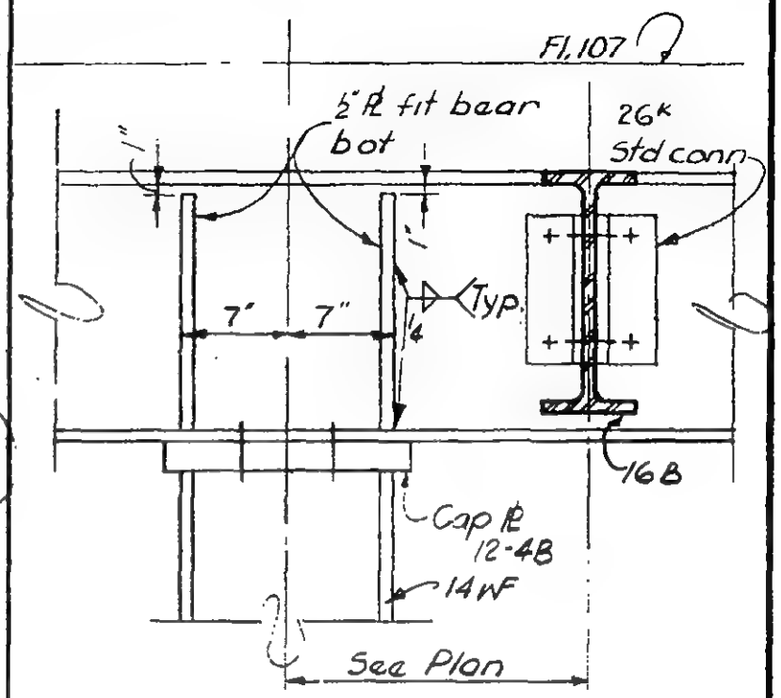

DETAIL 6-4B

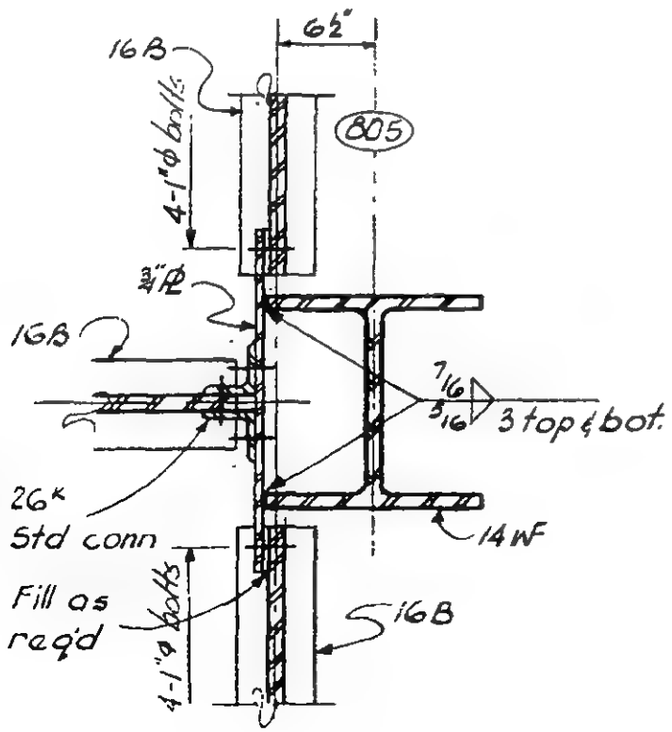

DETAIL 6-4C

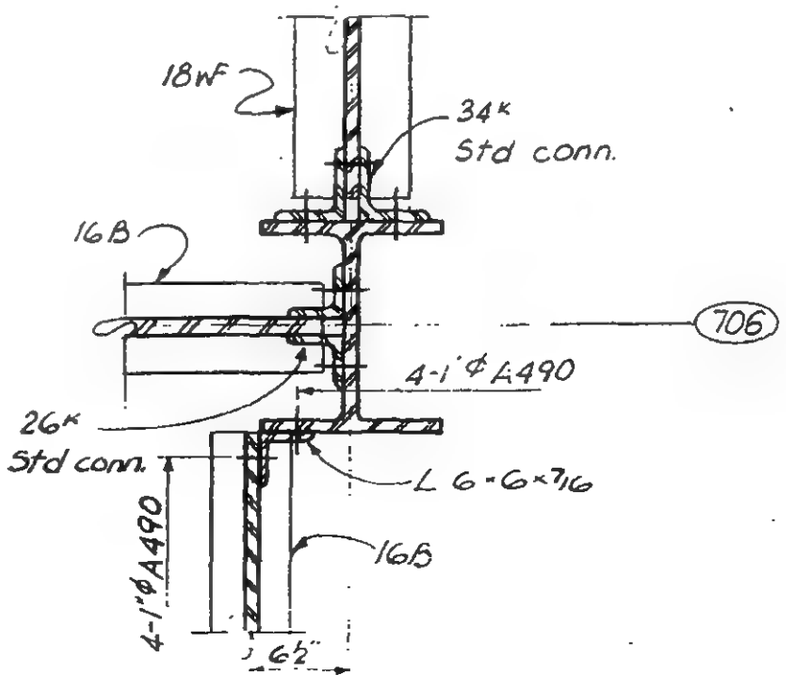

DETAIL 6-4D

LICENSED PROFESSIONAL ENGINEER
LESLIE E. ROBERTSON
NO 34360
UNIVERSITY OF THE STATE OF NEW YORK

SIGNED K. Hwang

DRAWN D. Huggins

REVIEWED E. Orakos

7-AE6-4

SKILLING, HELLE, CHRISTIANSEN, ROBERTSON — Structural & Civil Engineers

PROJECT: THE WORLD TRADE CENTER | TITLE: FL.107 PH-CONNECTION DETAILS | DATE: 11-9-73

REVISIONS

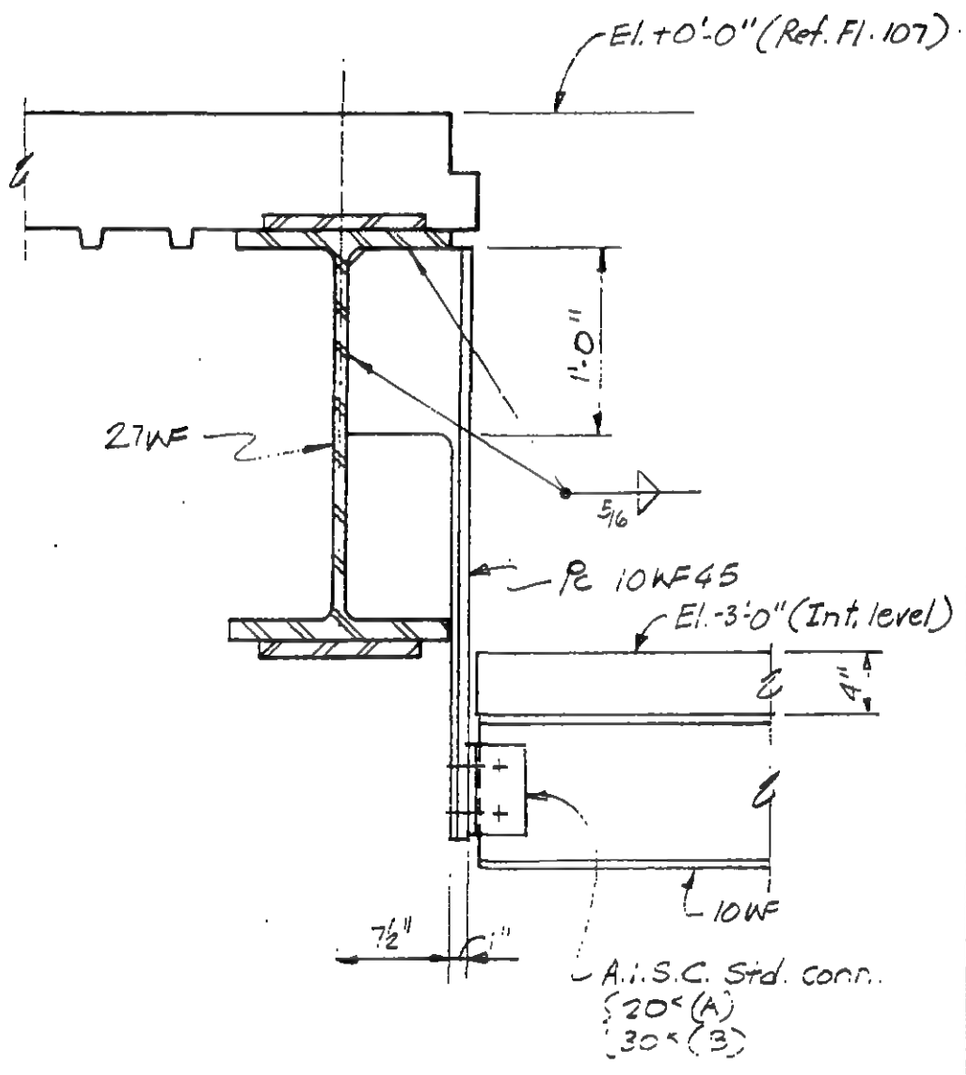

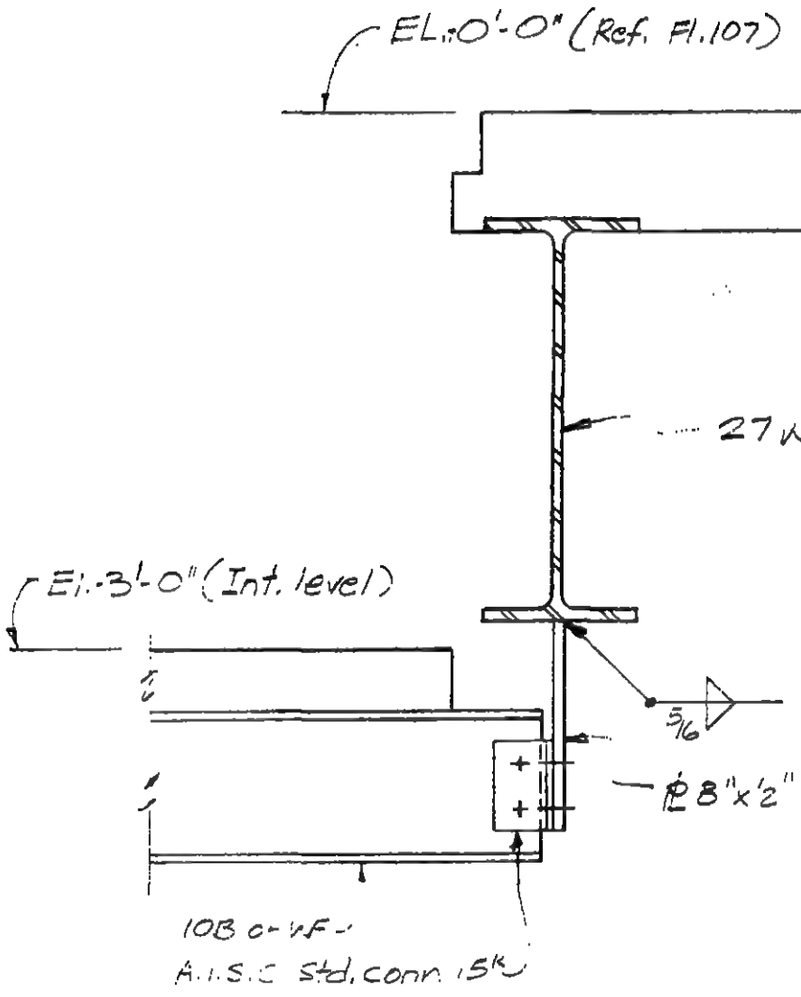

LICENSED PROFESSIONAL ENGINEER
LESLIE E. ROBERTSON
No 34360
STATE OF NEW YORK

CHECKED JM

DRAWN

REVIEWED

A | B | C

9-A6-5

SKILLING, HELLE, CHRISTIANSEN, ROBERTSON — Structural & Civil Engineers

PROJECT: THE WORLD TRADE CENTER

TITLE: EL 107 PH - CONNECTION DETAILS

DATE: 11-9-73

REVISIONS

A

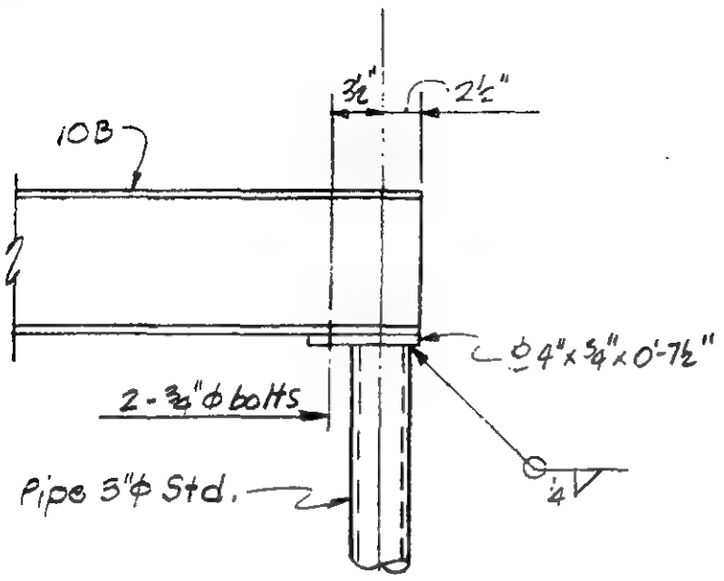

C

D

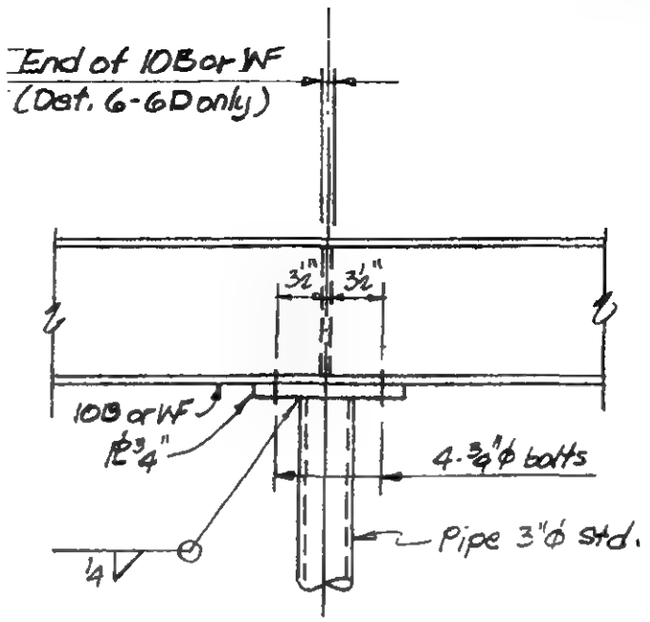

F

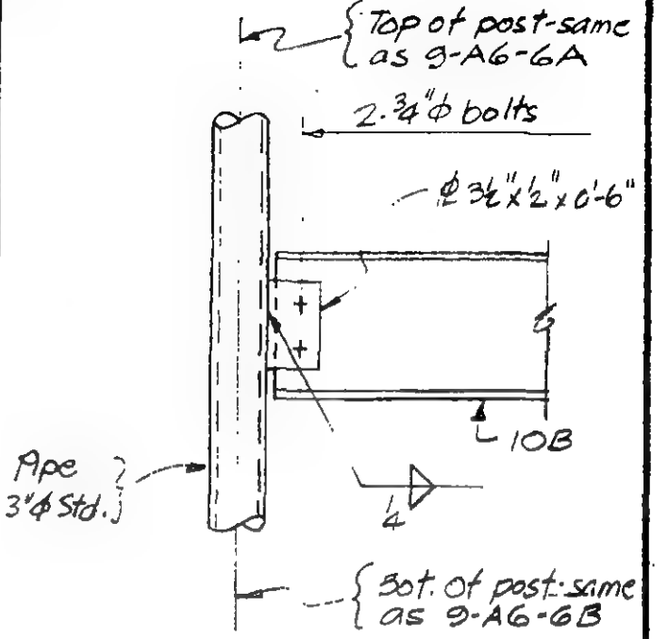

B

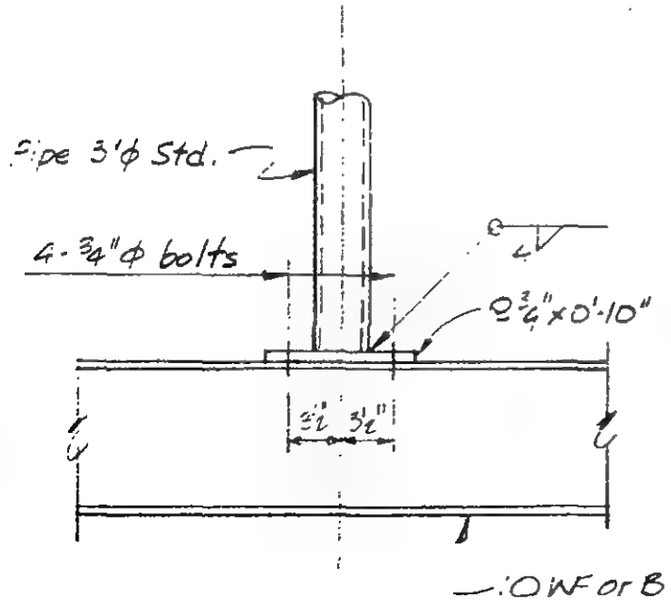

E

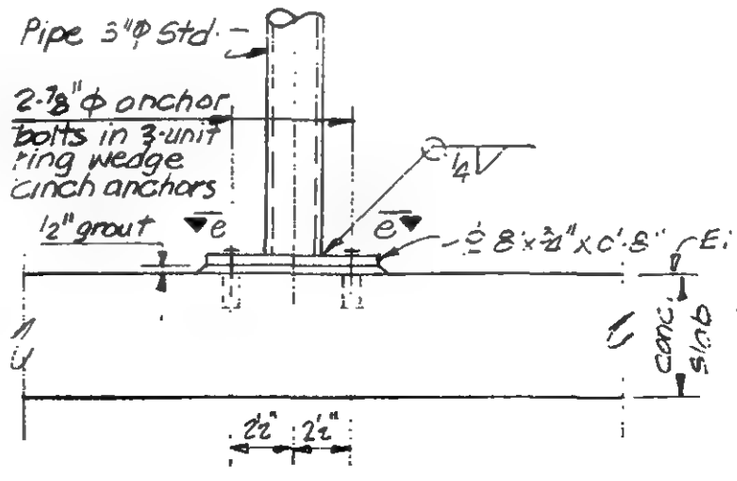

View looking north

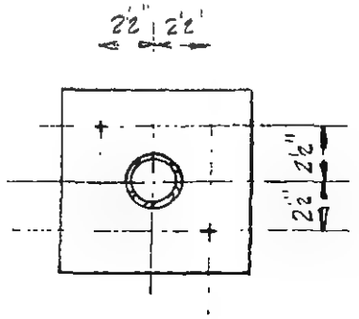

Section e-e

LICENSED PROFESSIONAL ENGINEER
LESLIE E. ROBERTSON
No 34360
UNIVERSITY OF THE STATE OF NEW YORK

SIGNED: TM

DRAWN:

REVISED:

9-AG-6

SKILLING, HELLE, CHRISTIANSEN, ROBERTSON — Structural & Civil Engineers

PROJECT: THE WORLD TRADE CENTER | TITLE: FLOOR 107-PH HORIZONTAL BRACING | DATE: 4-1-70

REVISIONS

5/27/70

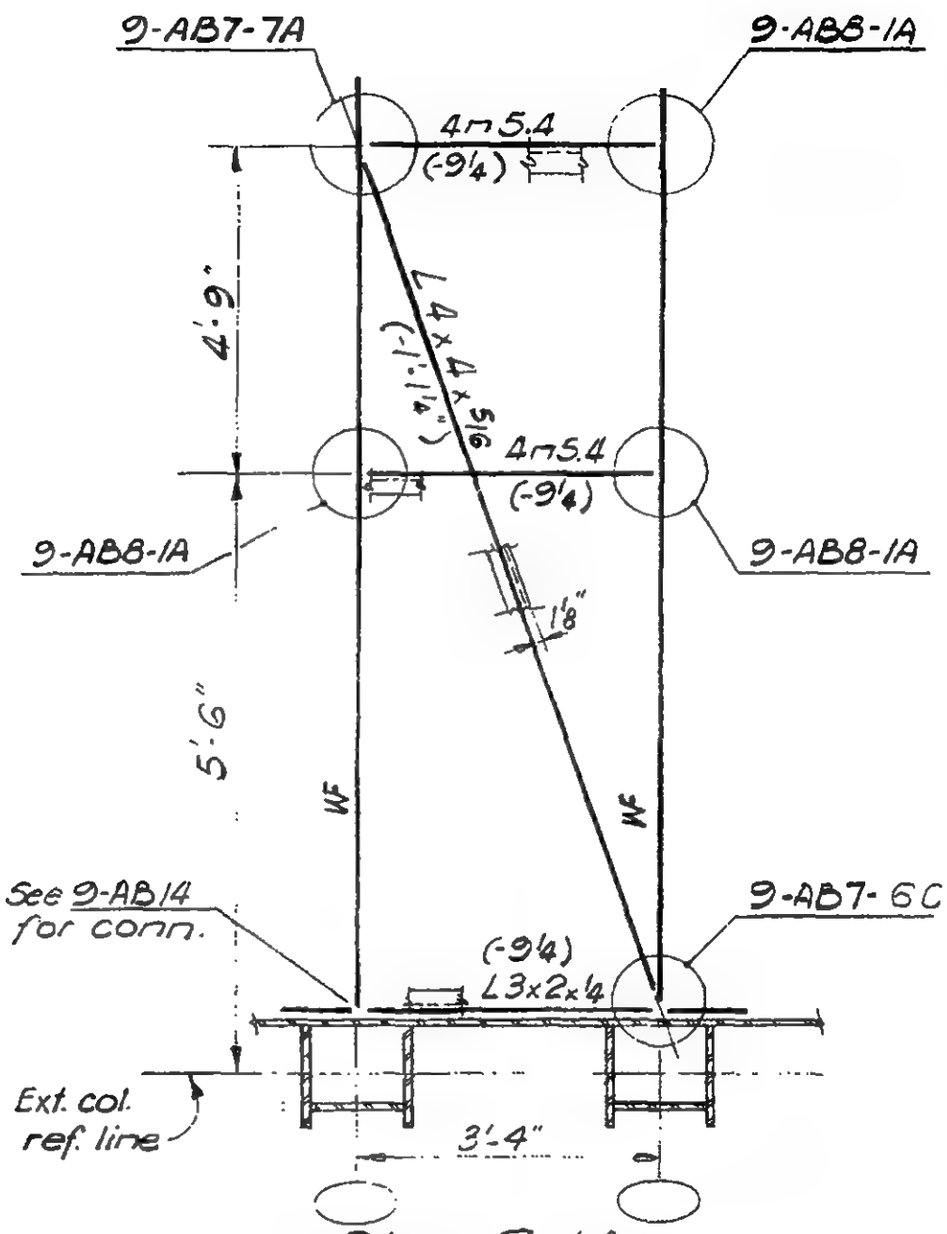

Plan 7-1A

Plan 7-1B Opp. hand

LICENSED PROFESSIONAL ENGINEER
LESLIE E. ROBERTSON
No 34360
UNIVERSITY OF THE STATE OF NEW YORK

DESIGNED

DRAWN M. Nichols

REVIEWED [illegible]

9-AB7-1

SKILLING, HELLE, CHRISTIANSEN, ROBERTSON — Structural & Civil Engineers

PROJECT THE WORLD TRADE CENTER | TITLE FLOOR 107 - PH. HORIZONTAL BRACING | DATE 4-1-70

VISIONS

5/27/70

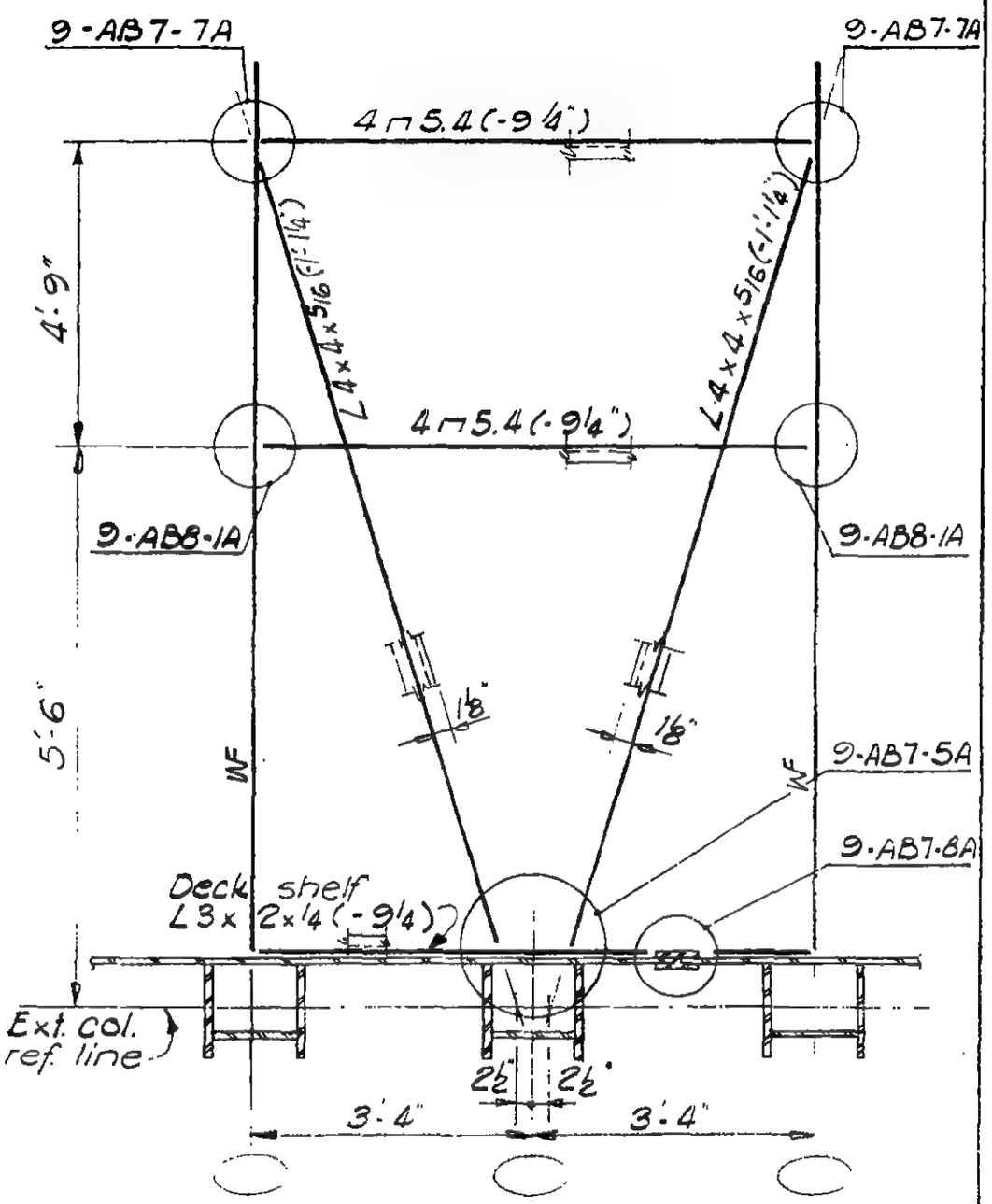

Plan 7-2C

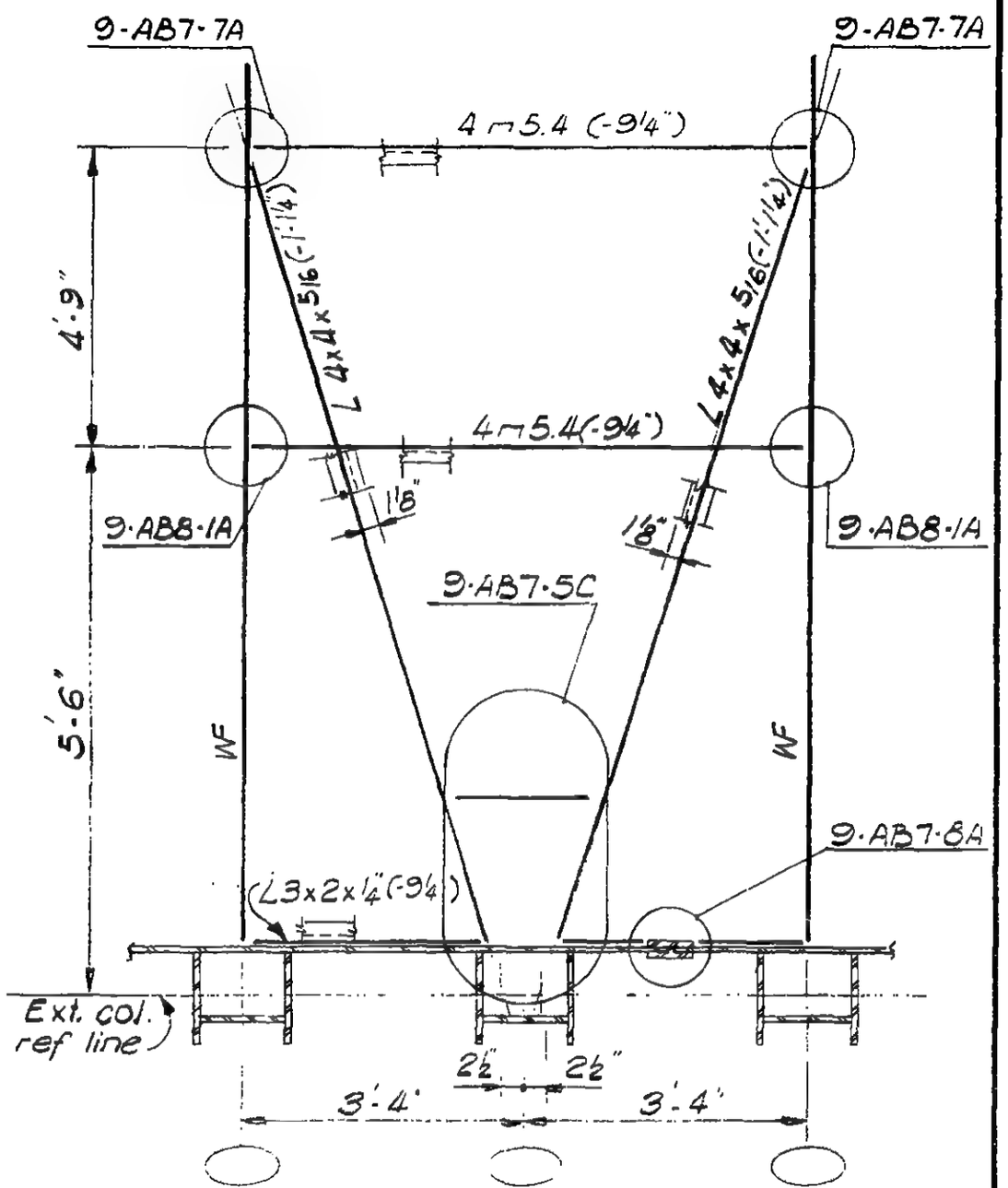

Plan 7-2D

LICENSED PROFESSIONAL ENGINEER
LESLIE E. ROBERTSON
No 34360
UNIVERSITY OF THE STATE OF NEW YORK

SIGNED

DRAWN M. Nichols

REVIEWED

9-AB7-2

SKILLING, HELLE, CHRISTIANSEN, ROBERTSON — Structural & Civil Engineers

PROJECT: THE WORLD TRADE CENTER | TITLE: FLOOR 107-PH HORIZONTAL BRACING | DATE: 4-1-70

DIVISIONS

5/27/70

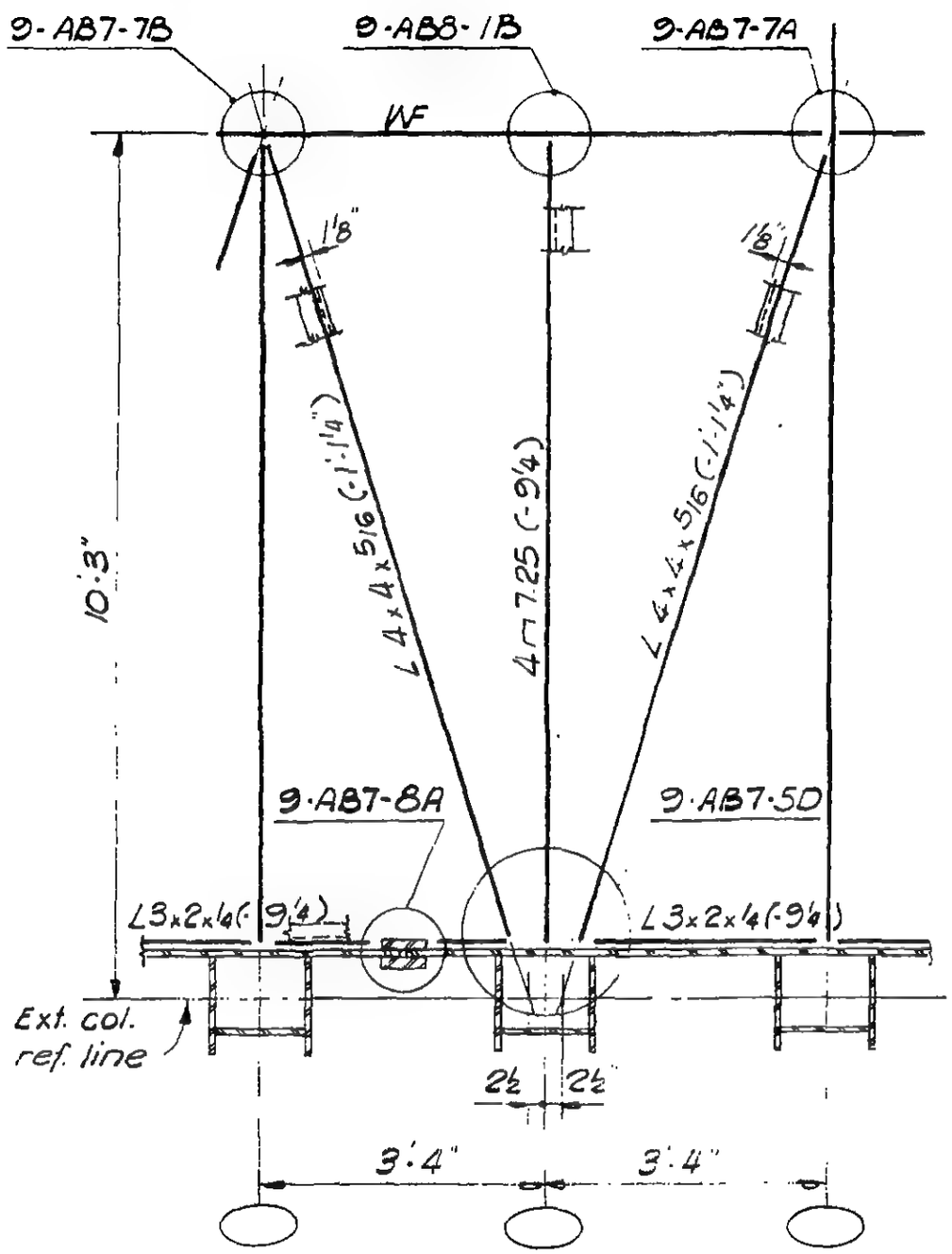

Plan 7-3G

Plan 7-3H opp hand

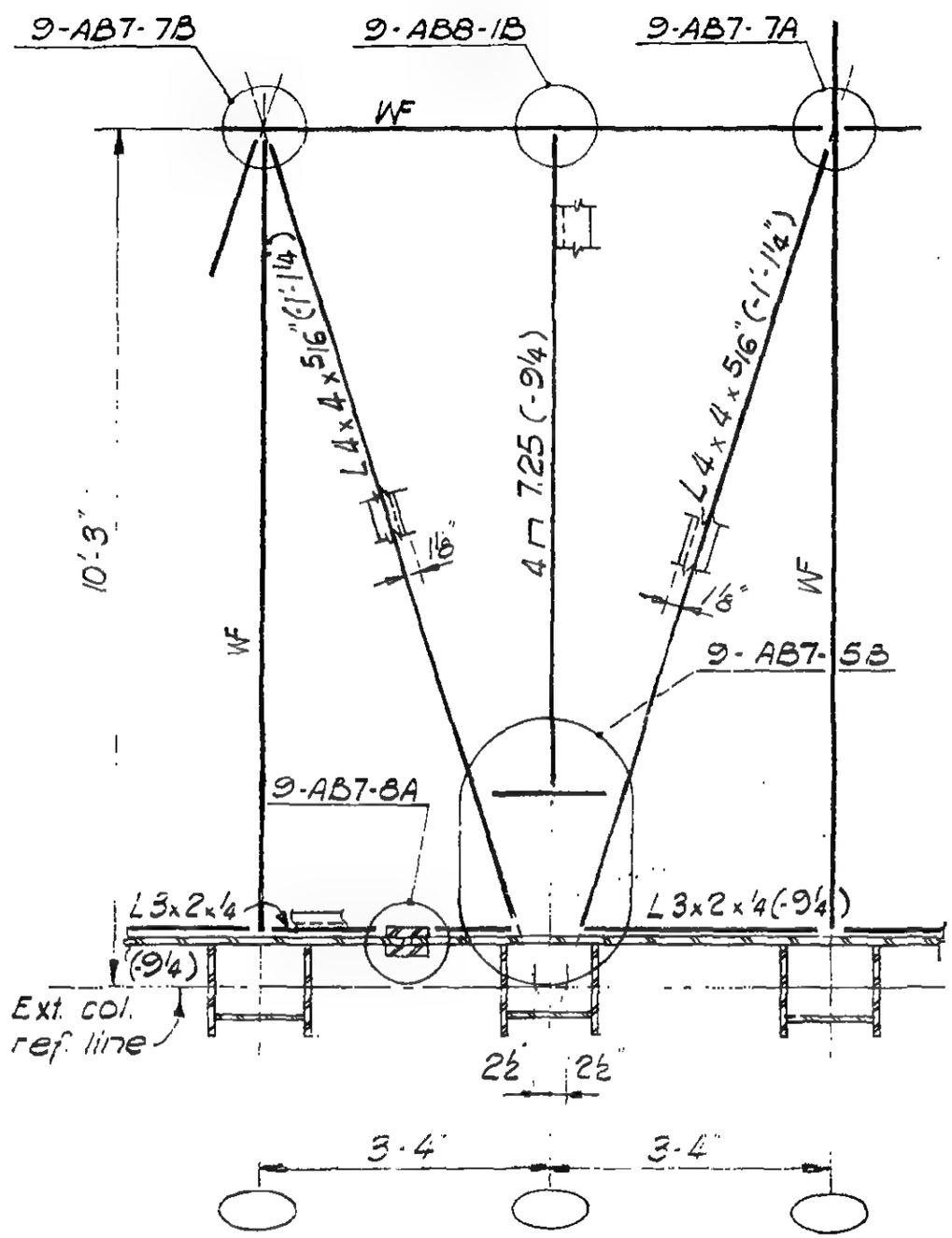

Plan 7-3E

Plan 7-3F opp. hand

LICENSED PROFESSIONAL ENGINEER — LESLIE E. ROBERTSON — No 34360 — UNIVERSITY OF THE STATE OF NEW YORK

DESIGNED

DRAWN M. Nichols

REVIEWED

9-AB7-3

SKILLING, HELLE, CHRISTIANSEN, ROBERTSON — Structural & Civil Engineers

PROJECT THE WORLD TRADE CENTER | TITLE FLOOR 107 - PH HORIZONTAL BRACING | DATE 4-1-70

VISIONS

5/27/70

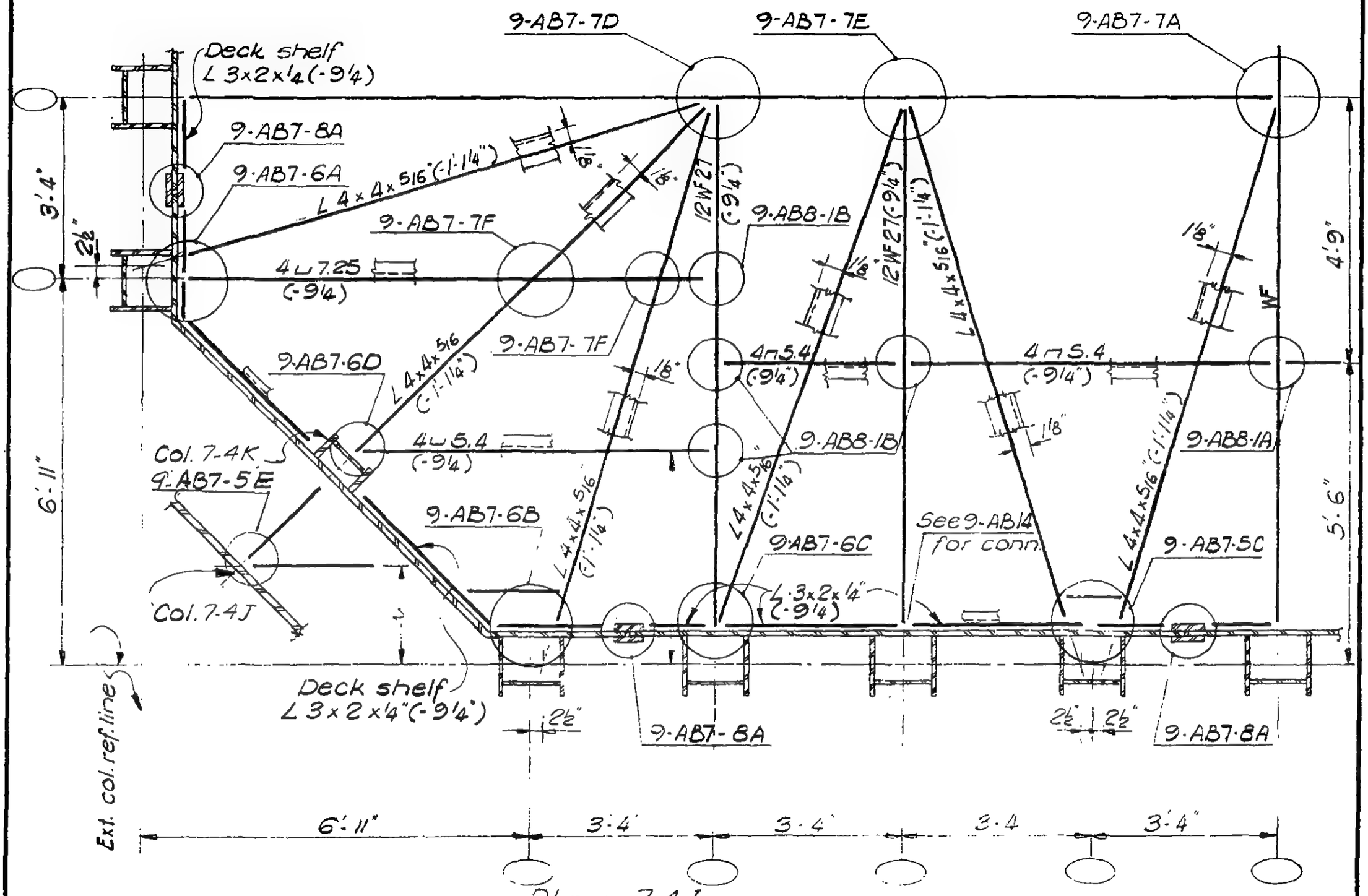

Plan 7-4J

Plan 7-4K opp. hand

LICENSED PROFESSIONAL ENGINEER
LESLIE E ROBERTSON
No 34360
UNIVERSITY OF THE STATE OF NEW YORK

SIGNED

DRAWN M. Nichols

REVIEWED

9-AB7-4

SKILLING, HELLE, CHRISTIANSEN, ROBERTSON — Structural & Civil Engineers

PROJECT THE WORLD TRADE CENTER | TITLE FLOOR 107-PH HORIZONTAL BRACING | DATE 4-1-70

REVISIONS

5/27/70

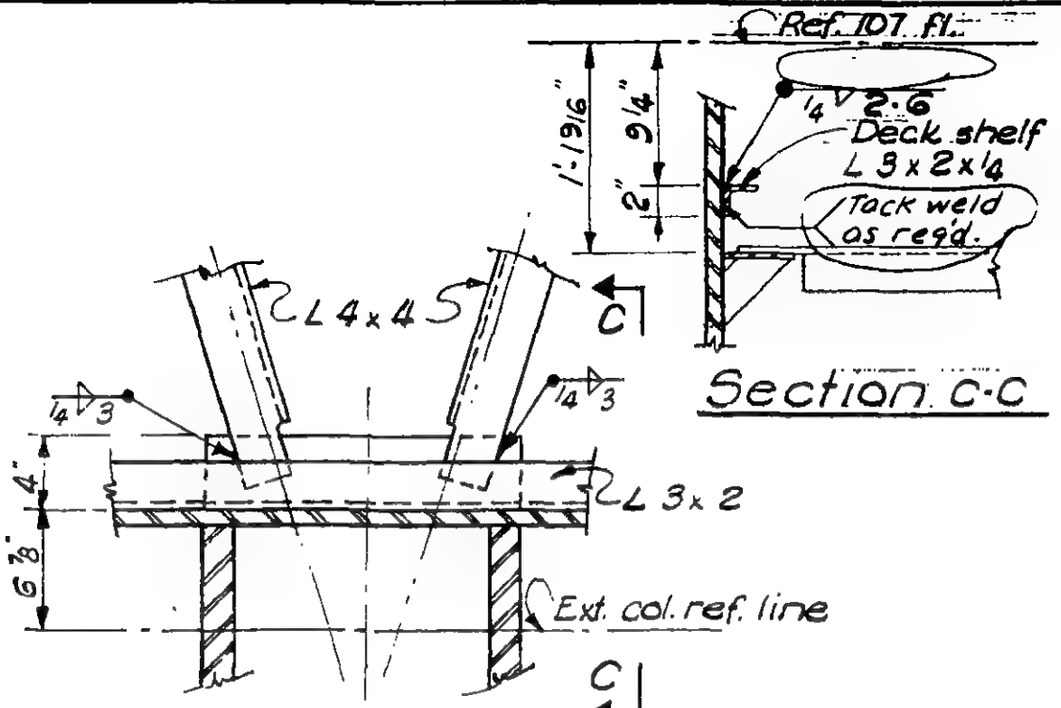

Detail 7-5A

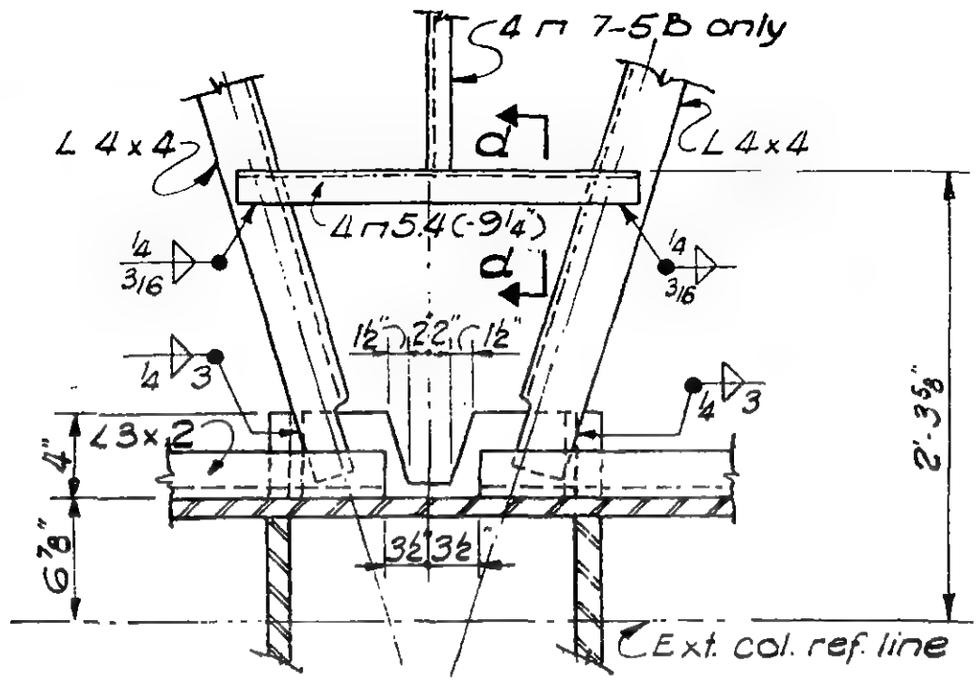

Detail 7-5B & 7-5C

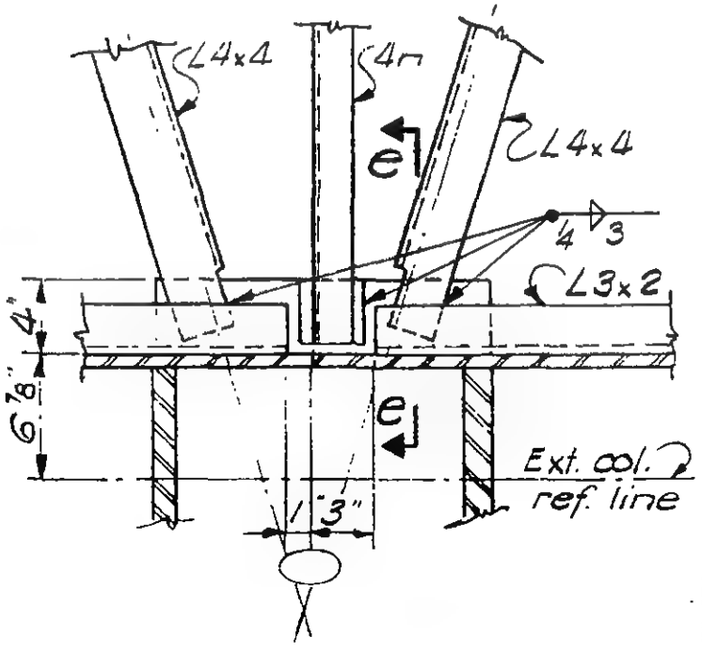

Detail 7-5D

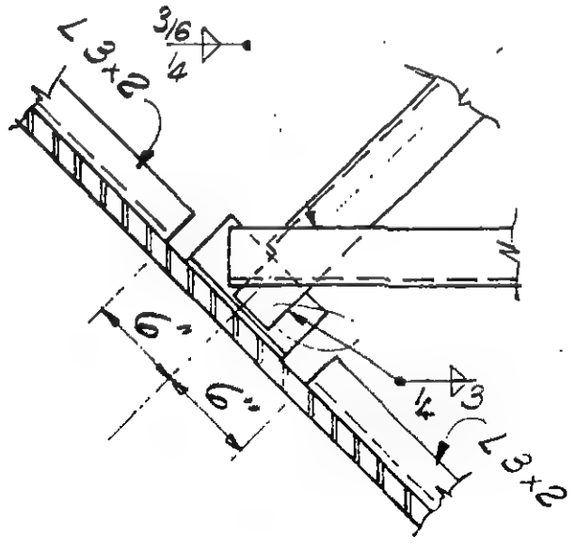

Detail 7-5E

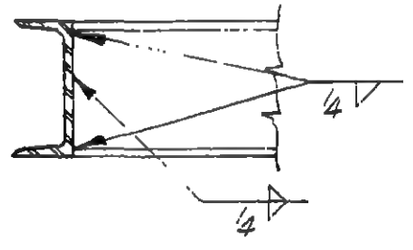

Section d-d
(7-5B only)

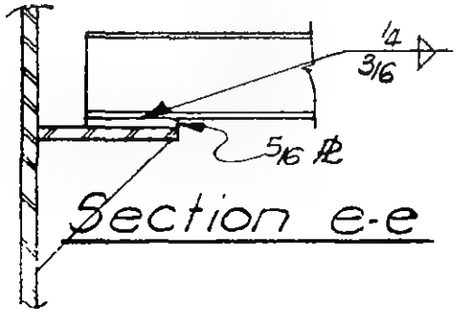

Section e-e

LICENSED PROFESSIONAL ENGINEER
LESLIE E. ROBERTSON
No 34960
UNIVERSITY OF THE STATE OF NEW YORK

CHKED

DRAWN M. Nichols

REVIEWED W [illegible]

9 - AB7 - 5

SKILLING, HELLE, CHRISTIANSEN, ROBERTSON — Structural & Civil Engineers

PROJECT THE WORLD TRADE CENTER | TITLE FLOOR 107 - PH HORIZONTAL BRACING | DATE 4-1-70

REVISIONS

5/27/70

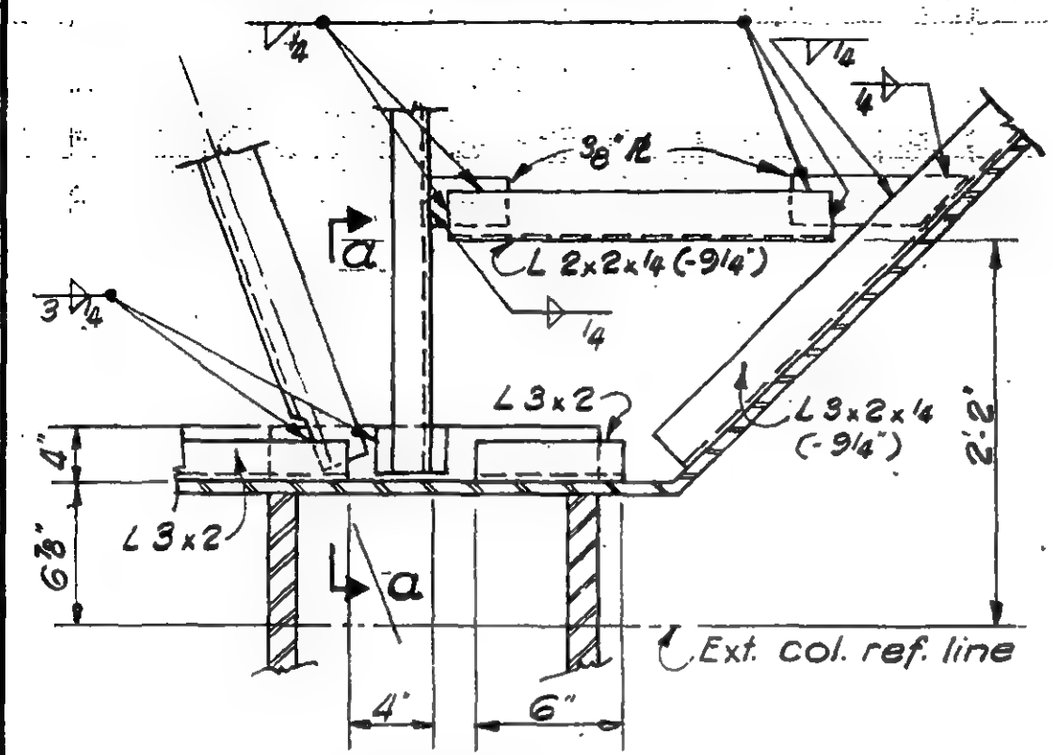

Detail 7-6A

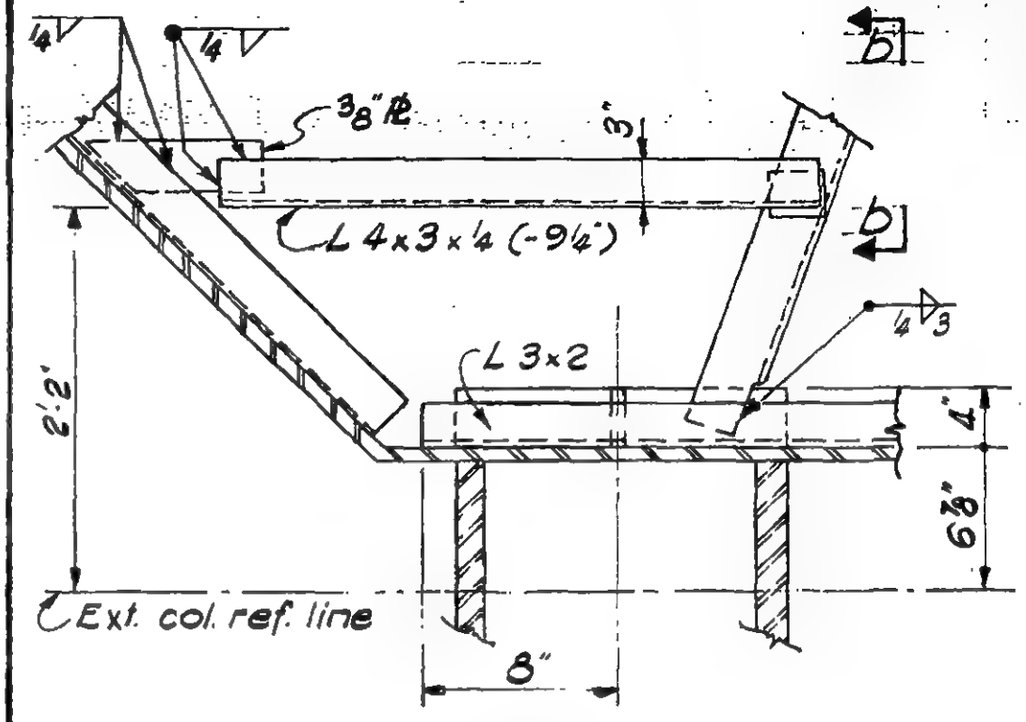

Detail 7-6B

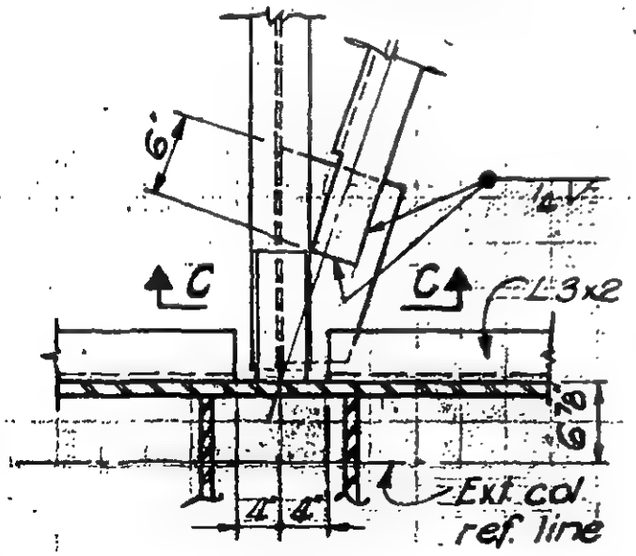

Detail 7-6C

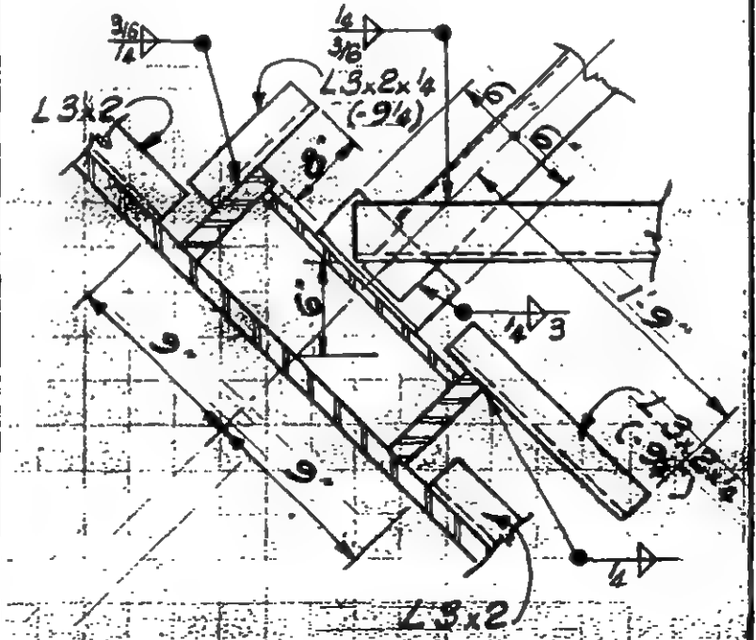

Detail 7-6D

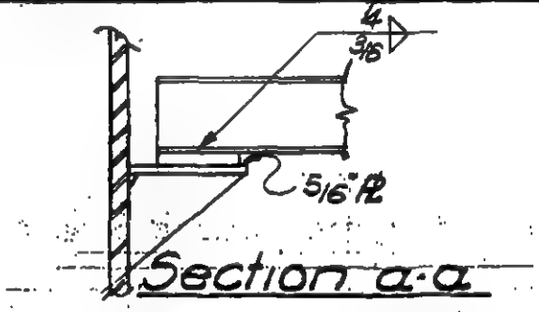

Section a-a

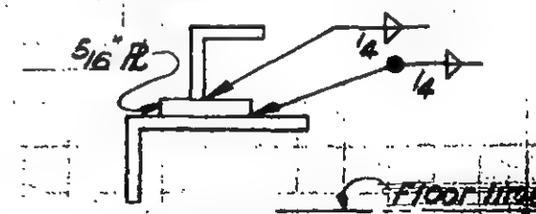

Section b-b

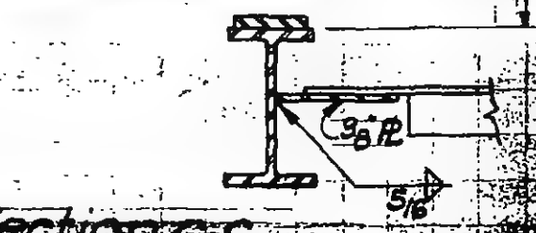

Section c-c

LICENSED PROFESSIONAL ENGINEER — LESLIE E. ROBERTSON — No. 34360 — UNIVERSITY OF THE STATE OF NEW YORK

DESIGNED

DRAWN M. Nichols

REVIEWED W Brewer

9-AB7-6

SKILLING, HELLE, CHRISTIANSEN, ROBERTSON — Structural & Civil Engineers

PROJECT: THE WORLD TRADE CENTER | TITLE: FLOOR 107 - PH HORIZONTAL BRACING | DATE: 4-1-70

REVISIONS

5/27/70

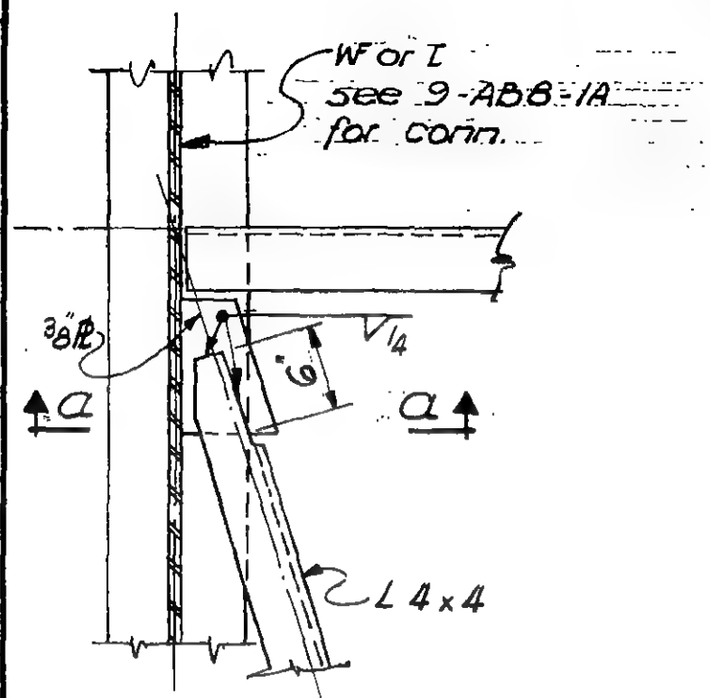

Detail 7-7A

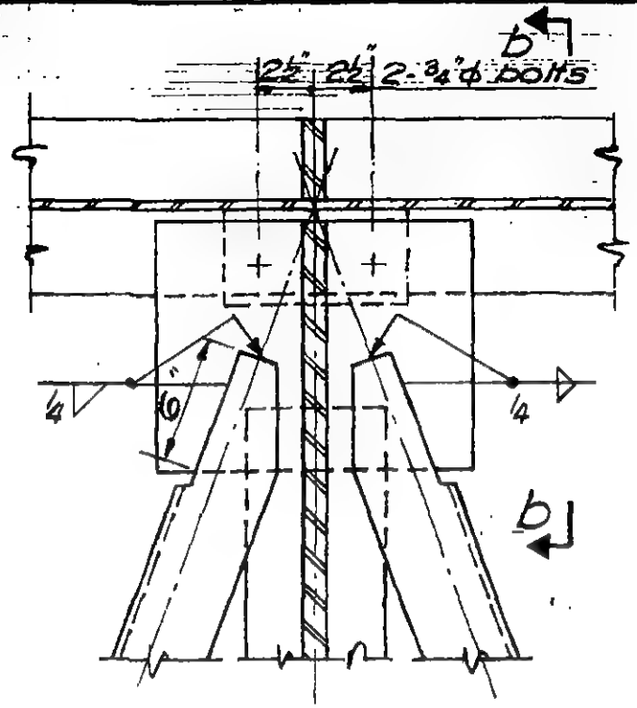

Detail 7-7B

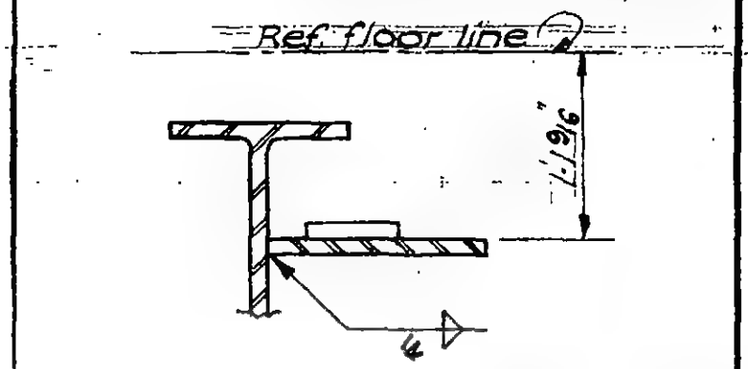

Section a-a

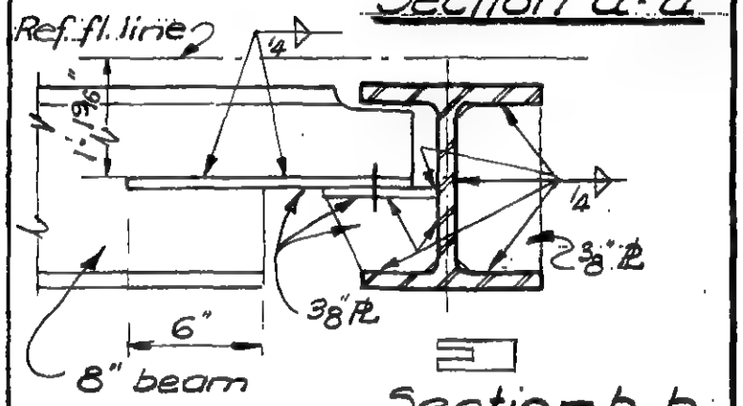

Section b-b

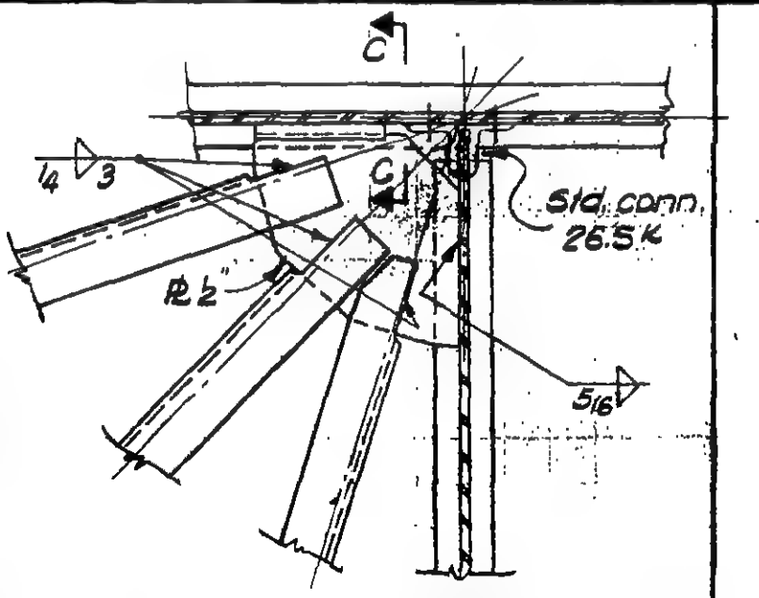

Detail 7-7D

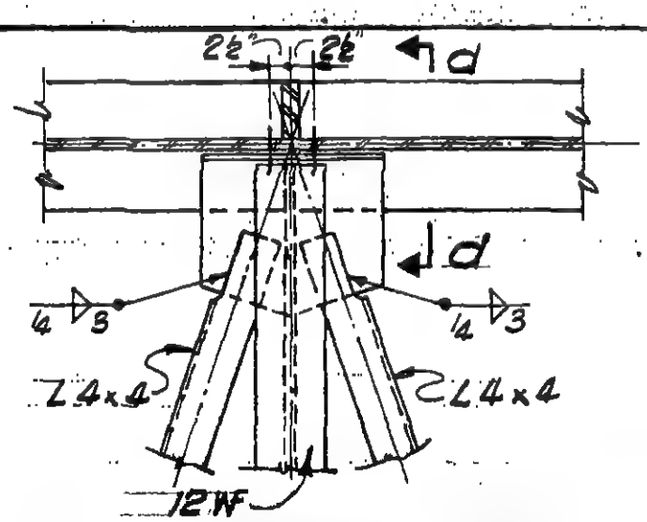

Detail 7-7E

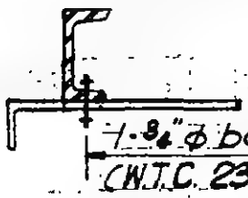

Detail 7-7F

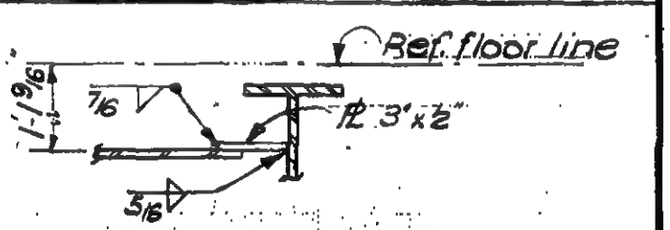

Section c-c

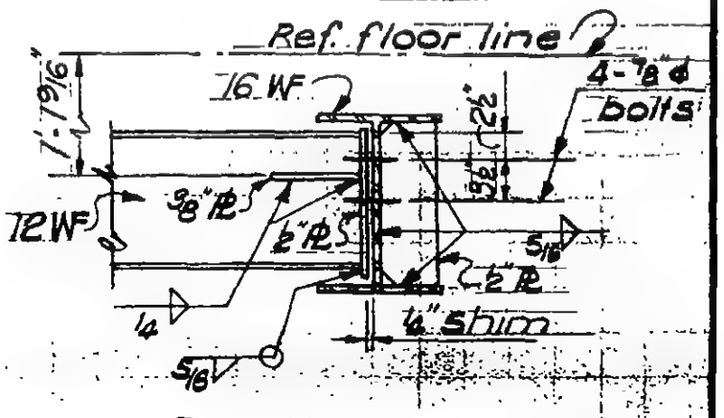

Section d-d

LICENSED PROFESSIONAL ENGINEER
LESLIE E. ROBERTSON
No. 34360
UNIVERSITY OF THE STATE OF NEW YORK

DESIGNED

DRAWN: M. Nichols

REVIEWED: W. Brewer

9-AB7-7

SKILLING, HELLE, CHRISTIANSEN, ROBERTSON — Structural & Civil Engineers

PROJECT THE WORLD TRADE CENTER | TITLE FLOOR 107-PH DECK SUPPORT DETAILS | DATE 4-1-70

REVISIONS

5/27/70

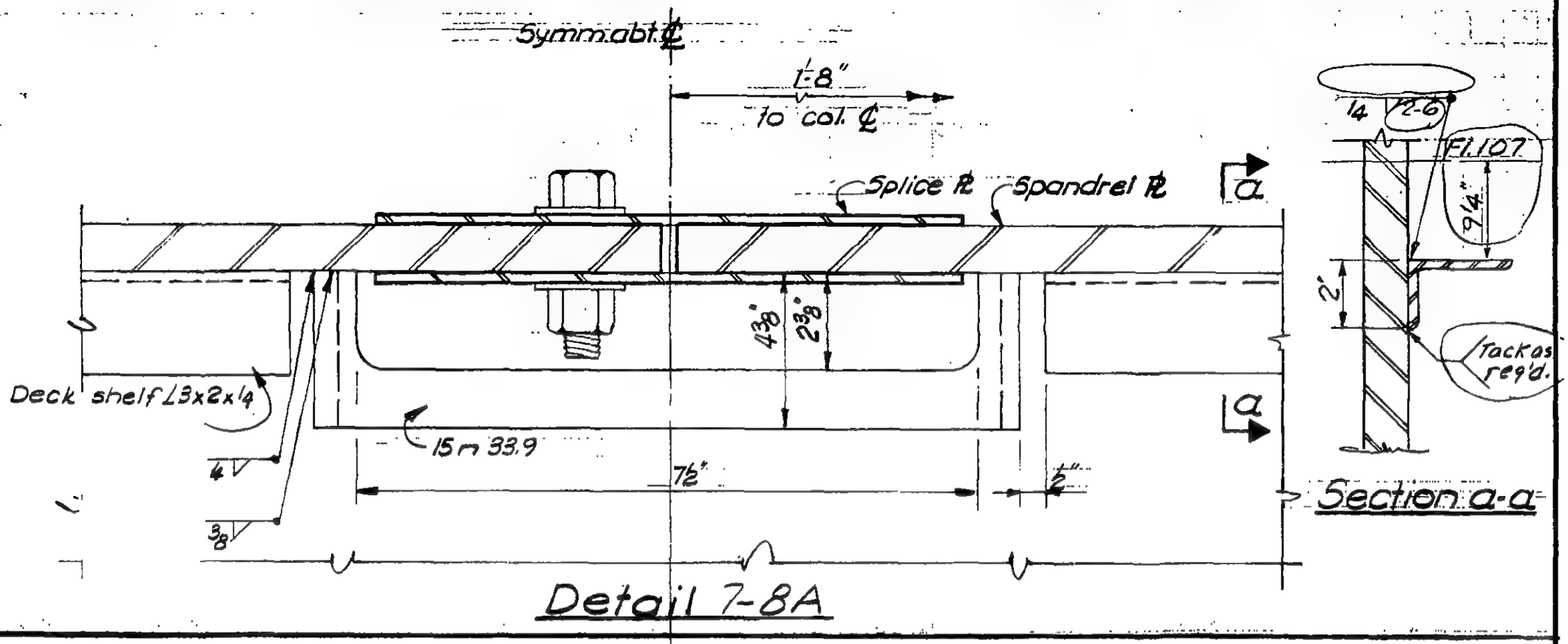

Section a-a

Detail 7-8A

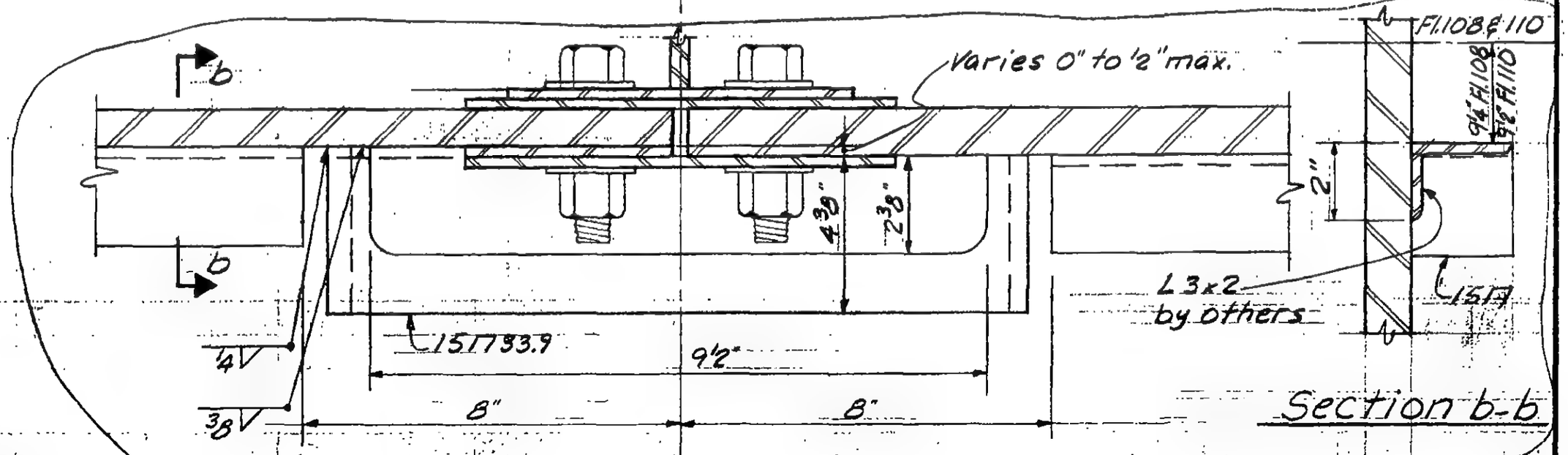

Section b-b

Detail 7-8B

LICENSED PROFESSIONAL ENGINEER — LESLIE E. ROBERTSON — No. 34360 — UNIVERSITY OF THE STATE OF NEW YORK

DESIGNED

DRAWN M. Nichols

REVIEWED W. Brewer

9-AB7-8

SKILLING, HELLE, CHRISTIANSEN, ROBERTSON — Structural & Civil Engineers

PROJECT: THE WORLD TRADE CENTER | TITLE: FL. 107-PH HORIZONTAL BRACING | DATE: 4-1-70

REVISIONS

5/27/70

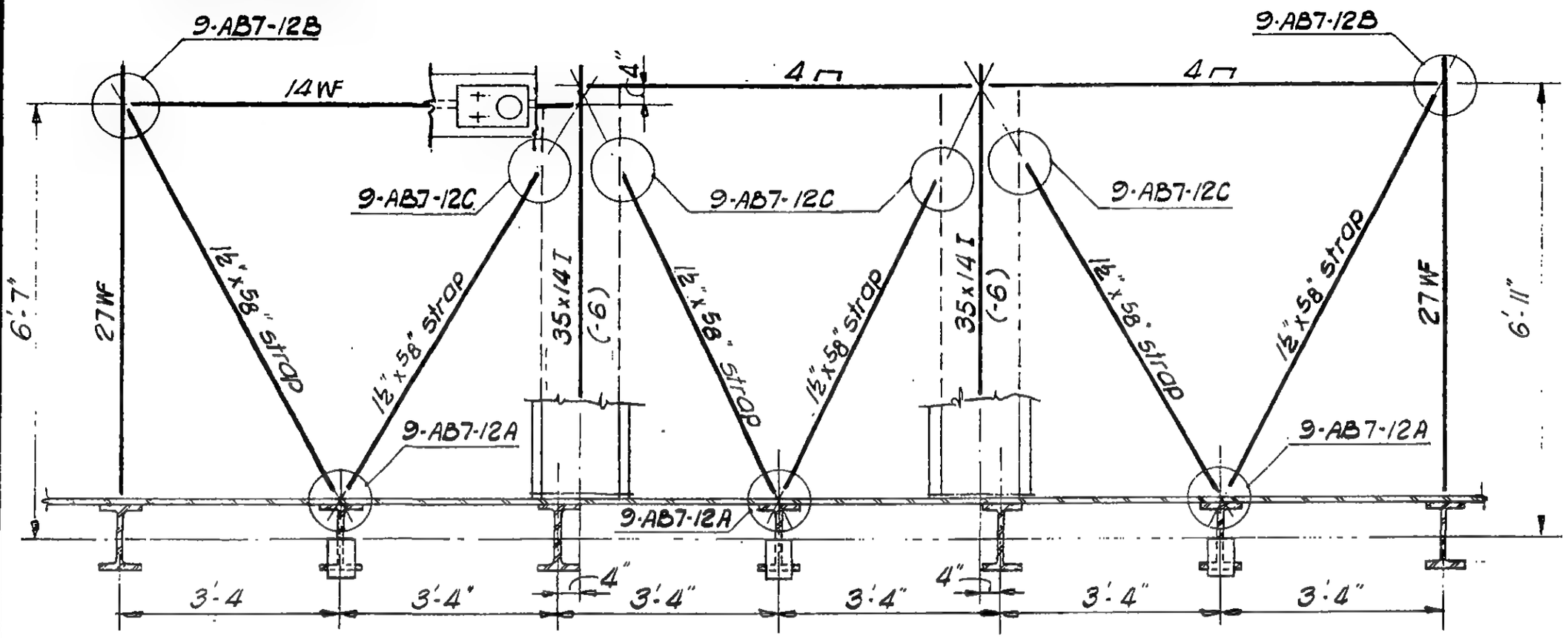

Plan 7-9A

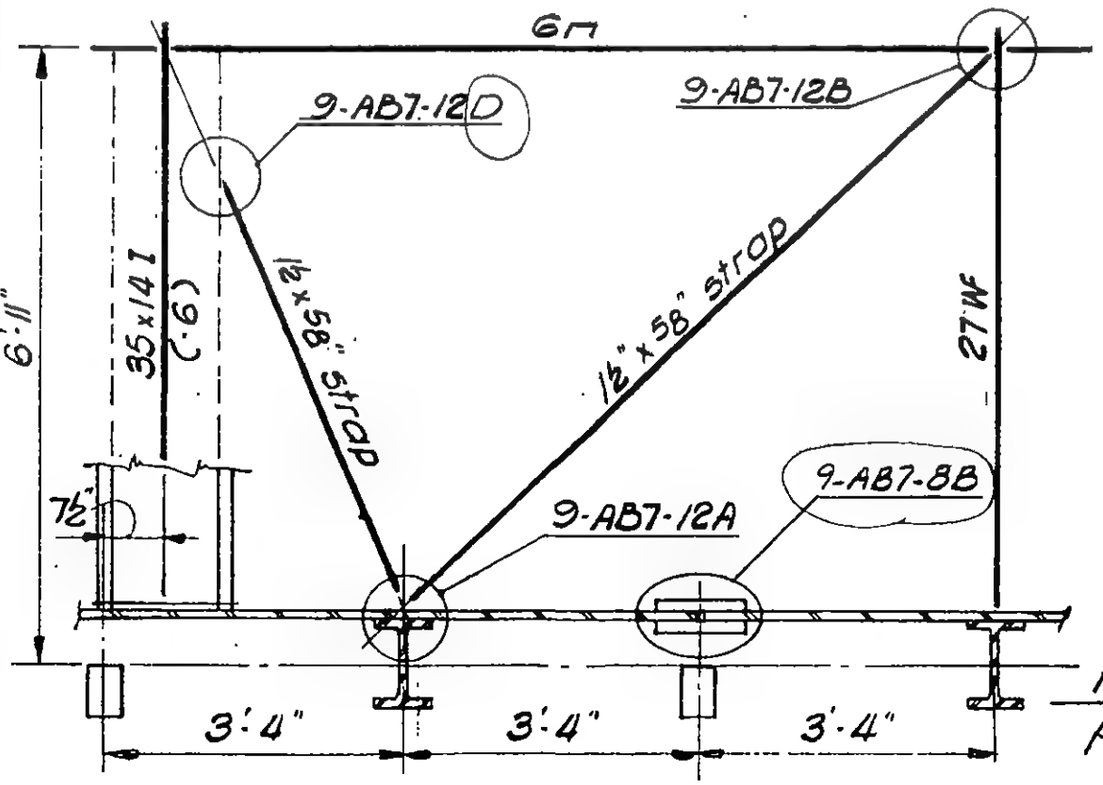

Plan 7-9B (as shown)
Plan 7-9C (opp. hand)

LICENSED PROFESSIONAL ENGINEER
LESLIE E. ROBERTSON
No. 34360
UNIVERSITY OF THE STATE OF NEW YORK

DESIGNED

DRAWN M. Nichols

REVIEWED W Brewer

9-AB7-9

SKILLING, HELLE, CHRISTIANSEN, ROBERTSON — Structural & Civil Engineers

PROJECT THE WORLD TRADE CENTER | TITLE FLOOR 107 - PH HORIZONTAL BRACING | DATE 4-1-70

REVISIONS

5/27/70

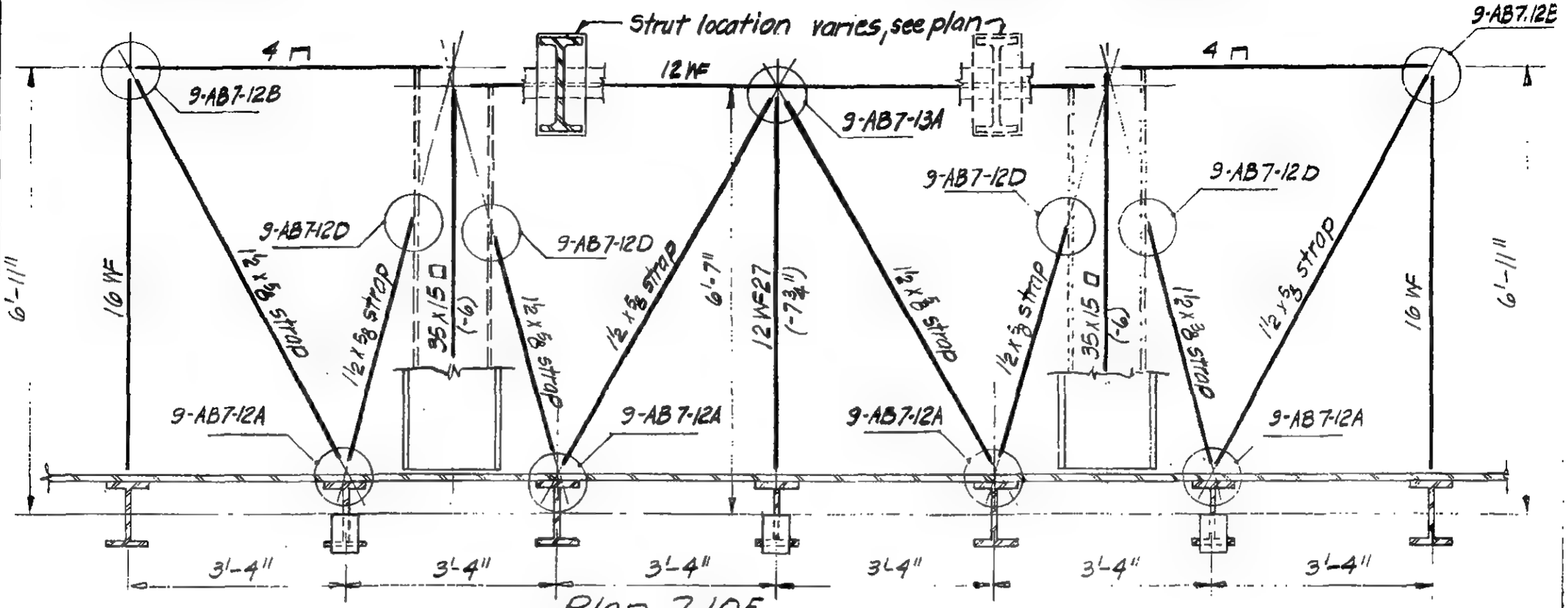

Plan 7-10E

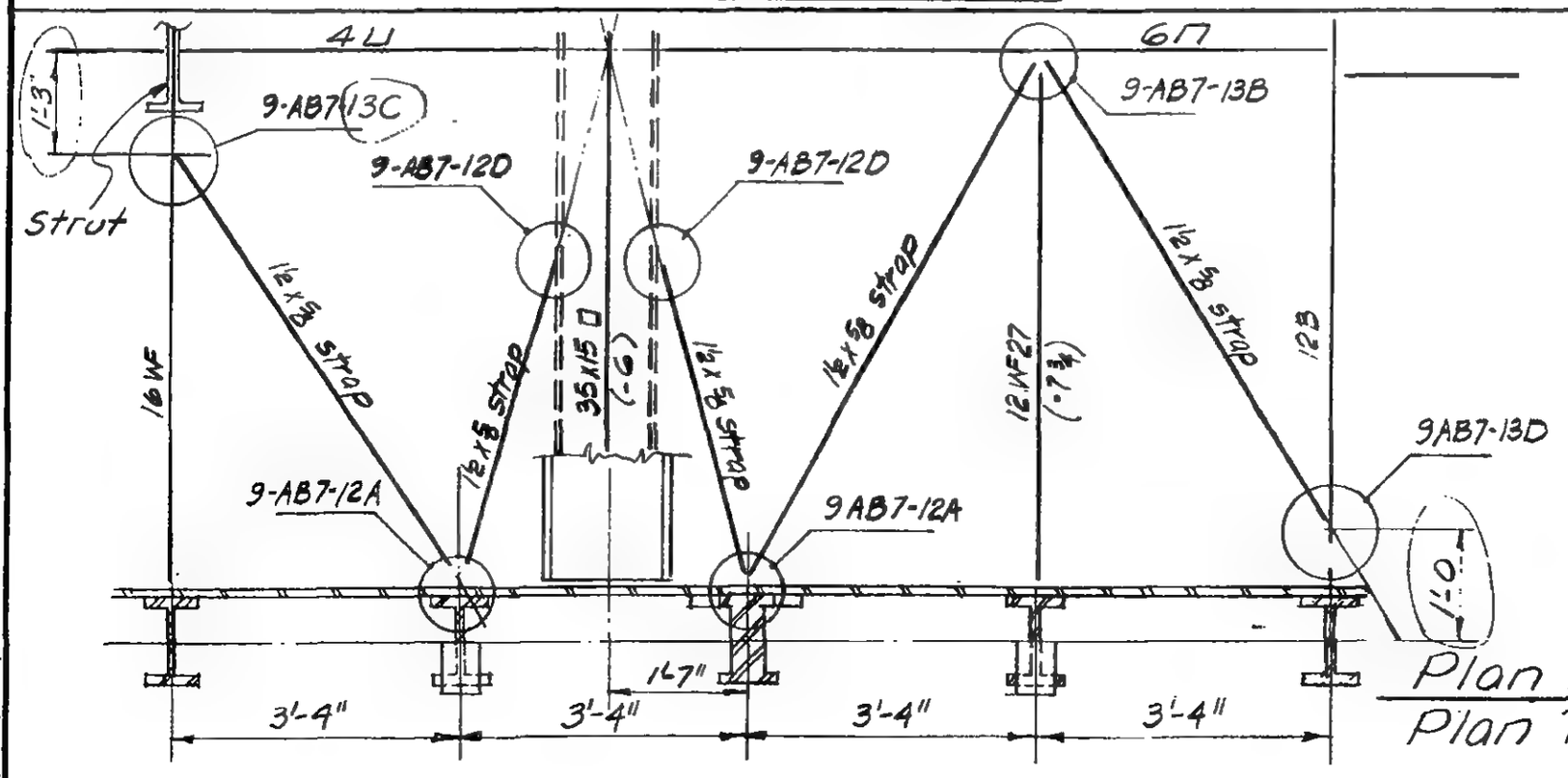

Plan 7-10F (as shown)
Plan 7-10G (opp. hand)

LICENSED PROFESSIONAL ENGINEER — LESLIE E. ROBERTSON — No. 34360 — UNIVERSITY OF THE STATE OF NEW YORK

DESIGNED

DRAWN M. Nichols

REVIEWED W Brewer

9-AB7-10

SKILLING, HELLE, CHRISTIANSEN, ROBERTSON — Structural & Civil Engineers

PROJECT THE WORLD TRADE CENTER | TITLE FLOOR 107 - PH HORIZONTAL BRACING | DATE 4-1-70

REVISIONS

5/27/70
6/15/70
7/8/70

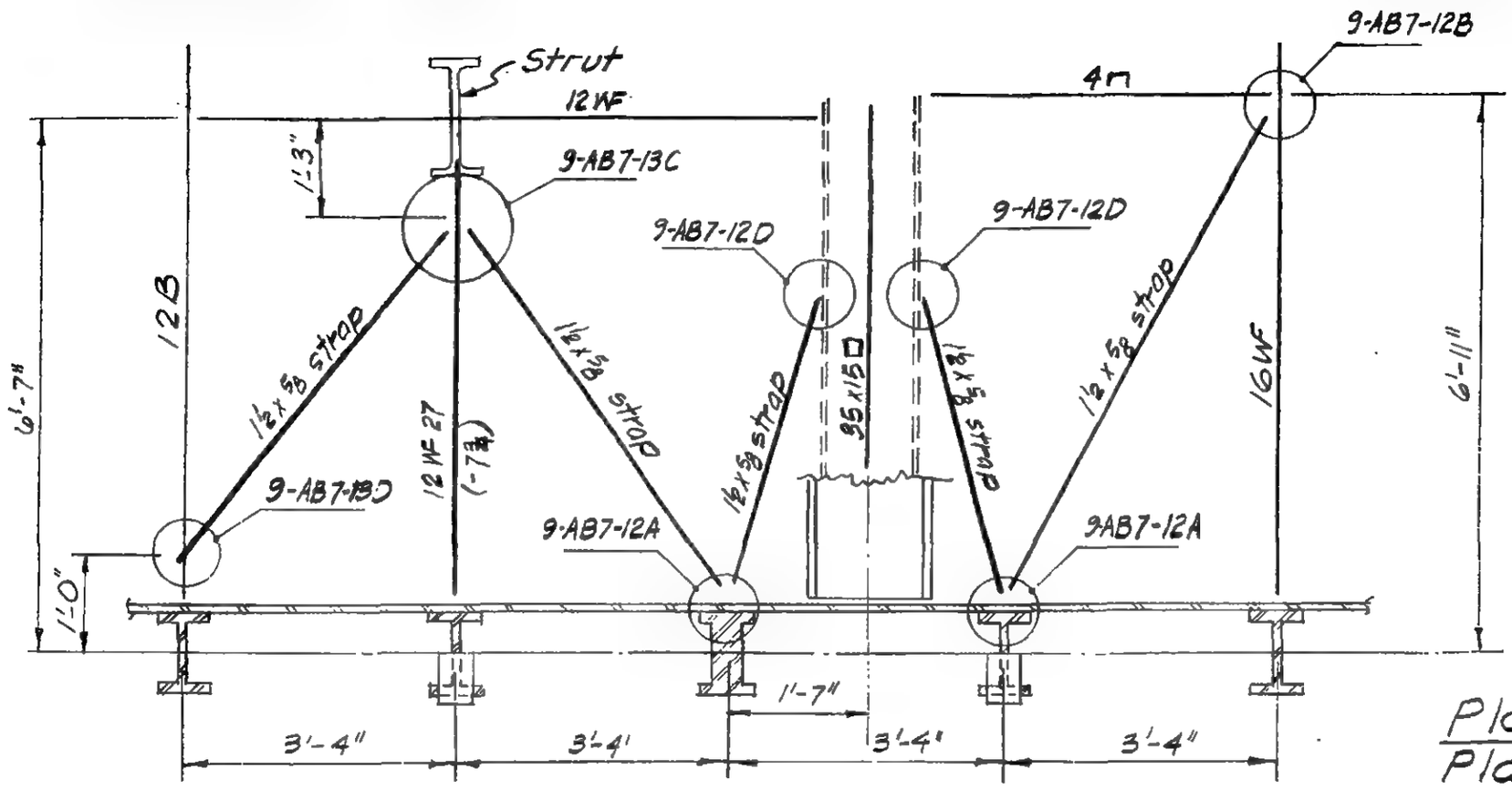

Plan 7-11K (as shown)
Plan 7-11M (opp. hand)

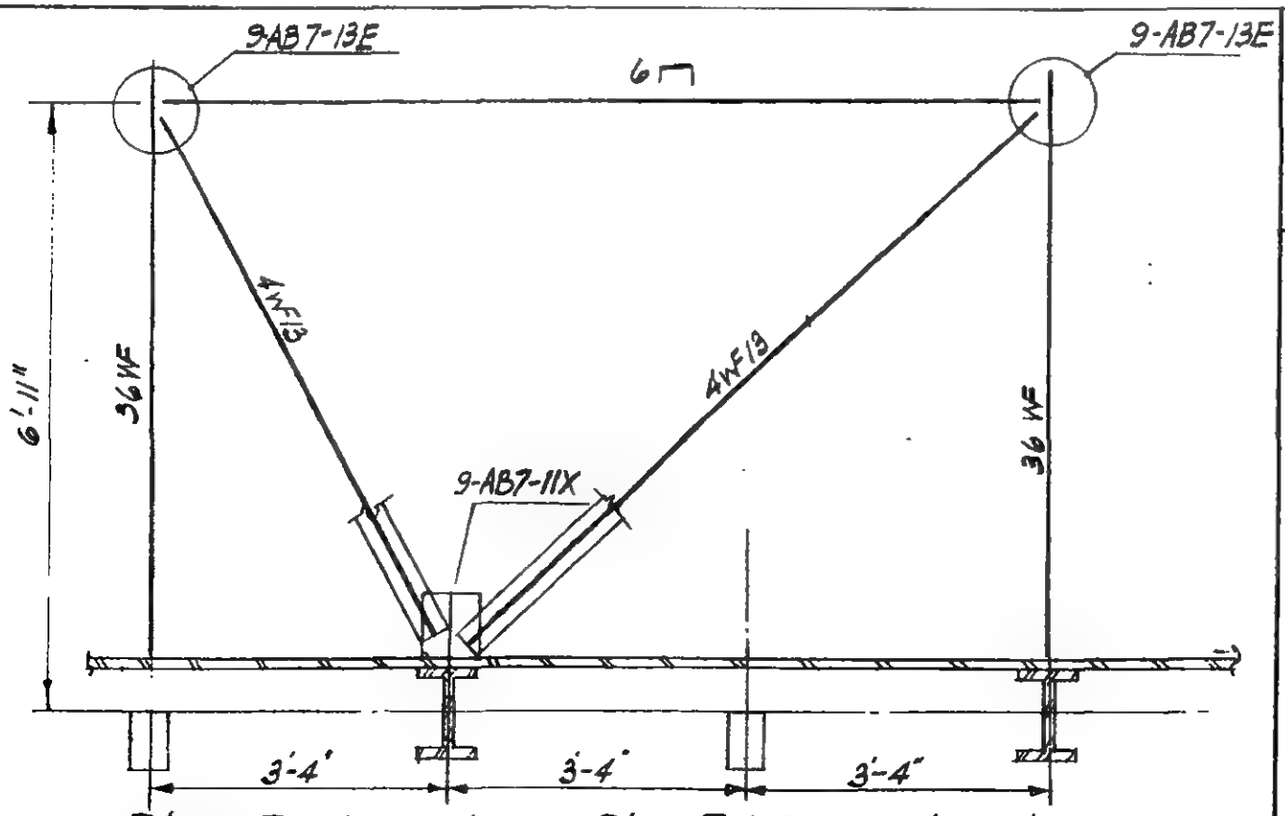

Plan 7-11P as shown Plan 7-11Q opp. hand

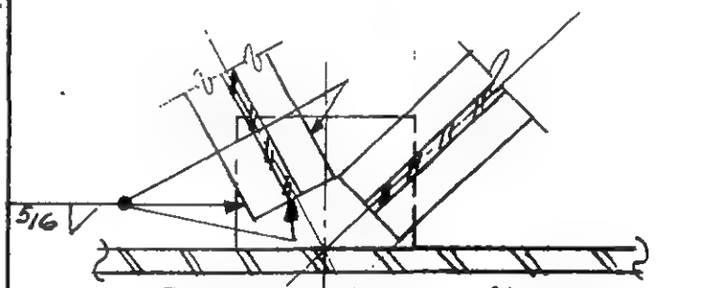

Plan bottom flange

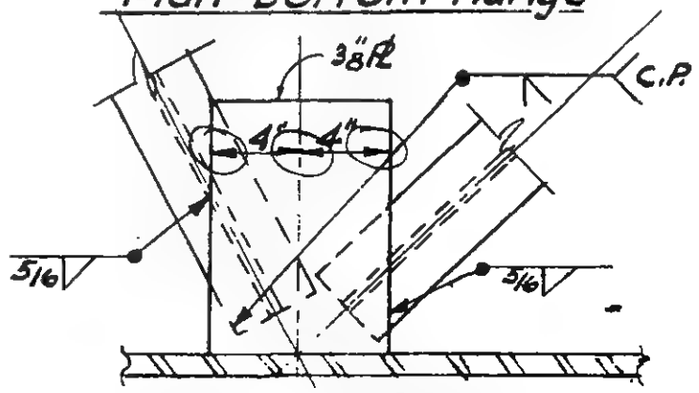

Plan top flange

DETAIL 7-11X

9-AB7-11

LICENSED PROFESSIONAL ENGINEER
LESLIE E. ROBERTSON
No. 34360
UNIVERSITY OF THE STATE OF NEW YORK

DESIGNED

DRAWN R Ozeki

REVIEWED W Brewer

SKILLING, HELLE, CHRISTIANSEN, ROBERTSON — Structural & Civil Engineers

PROJECT THE WORLD TRADE CENTER | TITLE FL.107-PH, HORIZONTAL BRACING | DATE 4-1-70

REVISIONS
5-27-70
6-15-70

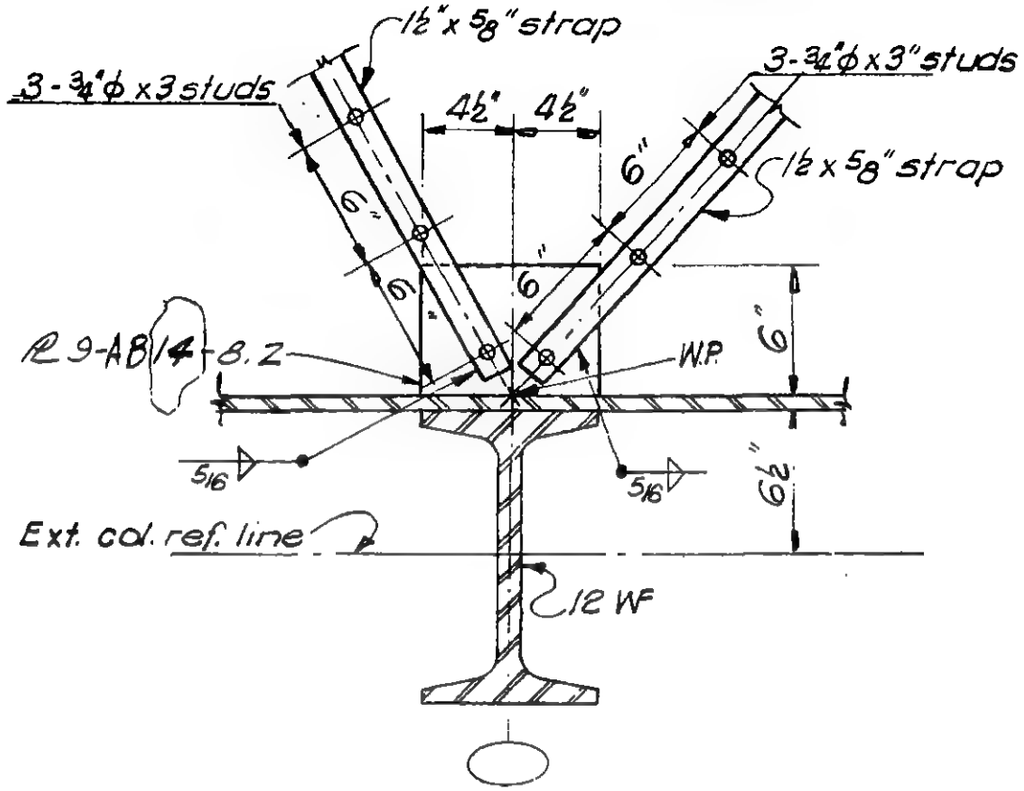

Detail 7-12A

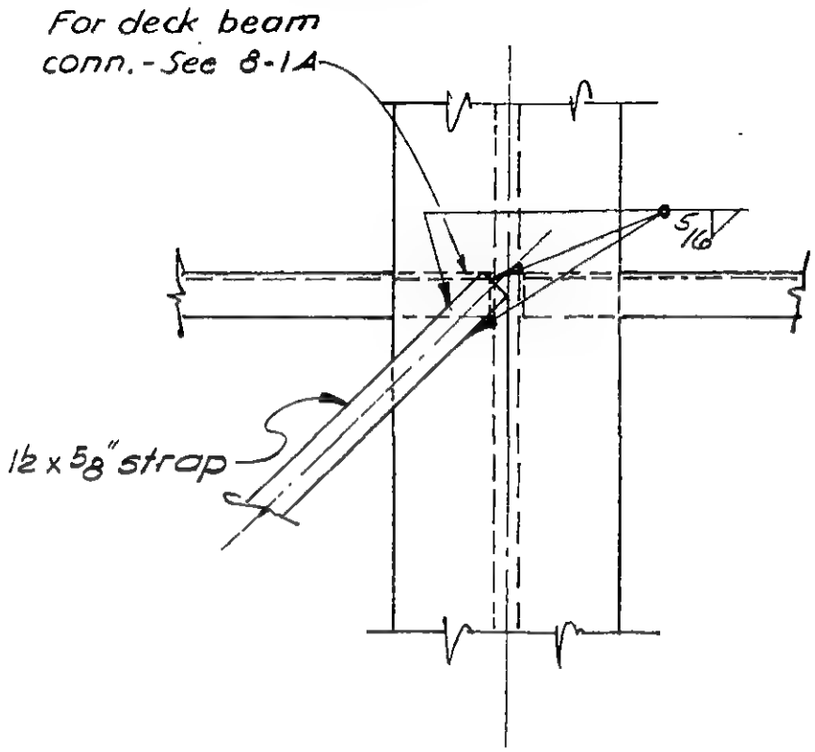

Detail 7-12B

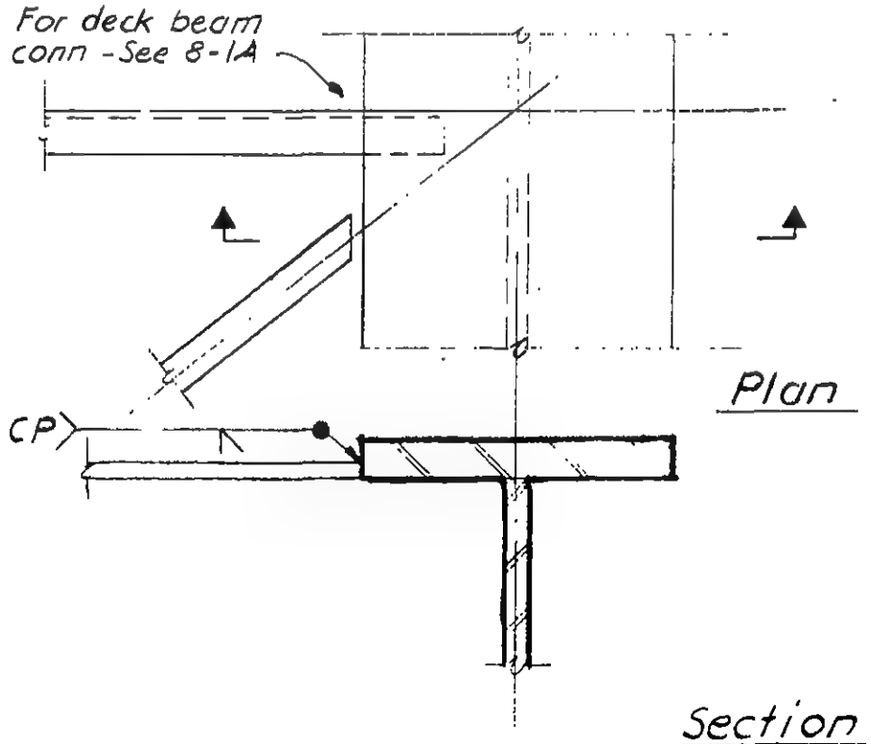

Detail 7-12C

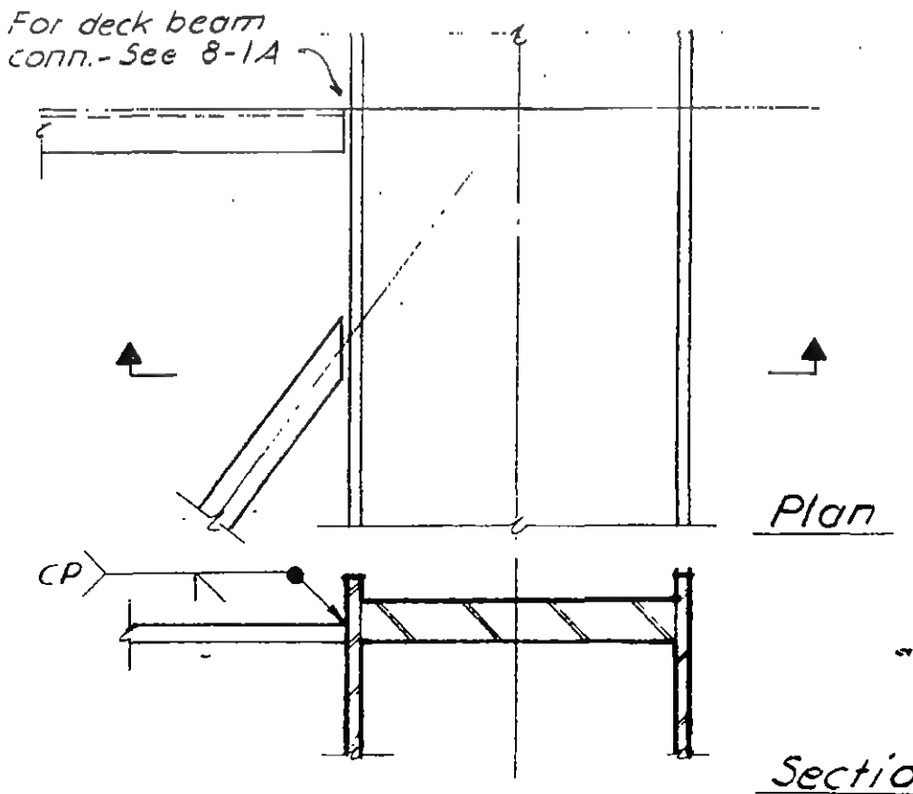

Detail 7-12D

9-AB 7-12

LICENSED PROFESSIONAL ENGINEER LESLIE E. ROBERTSON No 34360 UNIVERSITY OF THE STATE OF NEW YORK

DESIGNED

DRAWN M. Nichols

REVIEWED W Brewer

SKILLING, HELLE, CHRISTIANSEN, ROBERTSON — Structural & Civil Engineers

PROJECT THE WORLD TRADE CENTER | TITLE FL. 107-PH, HORIZONTAL BRACING | DATE 4-1-70

REVISIONS
5-27-70
6-15-70

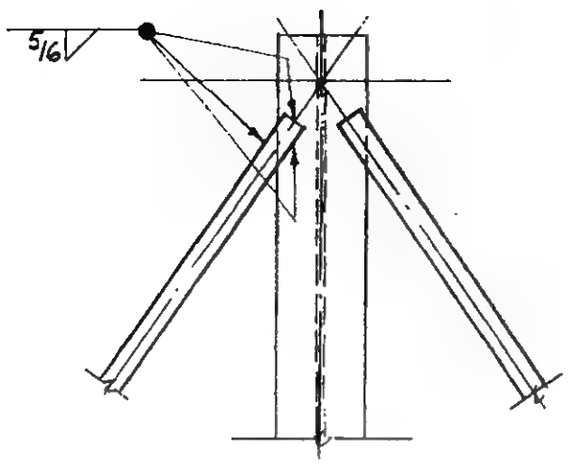

Plan a-a

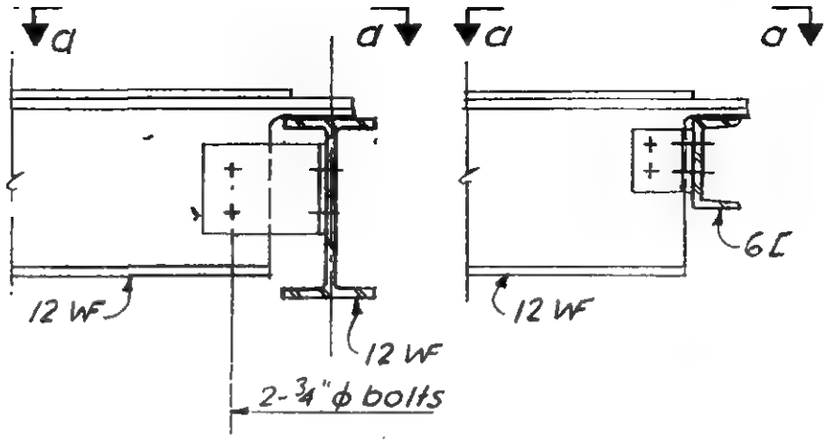

Detail 7-13A

Detail 7-13B

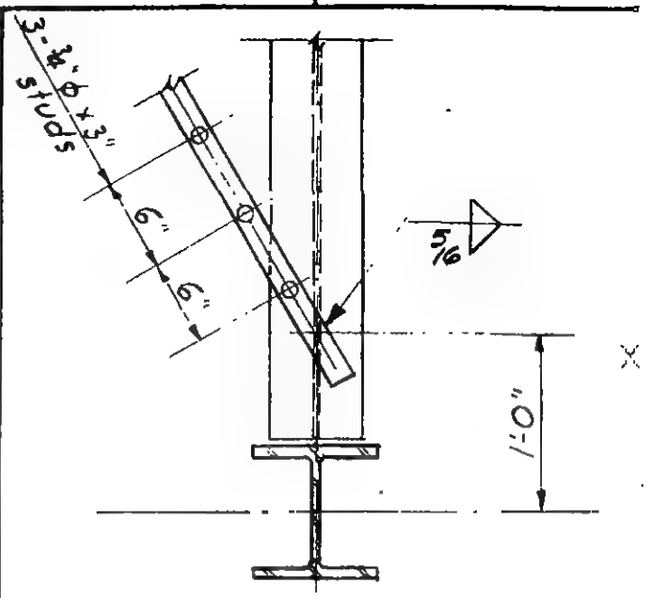

Detail 7-13D

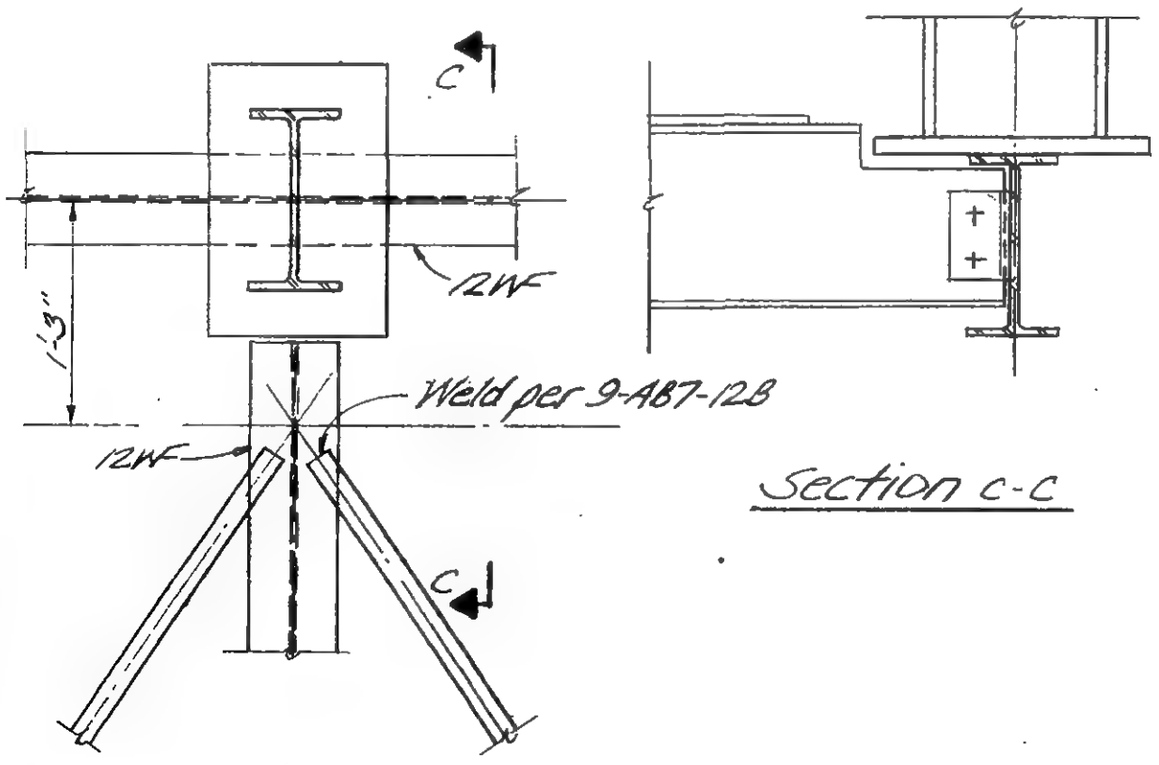

Plan

Section c-c

Detail 7-13C

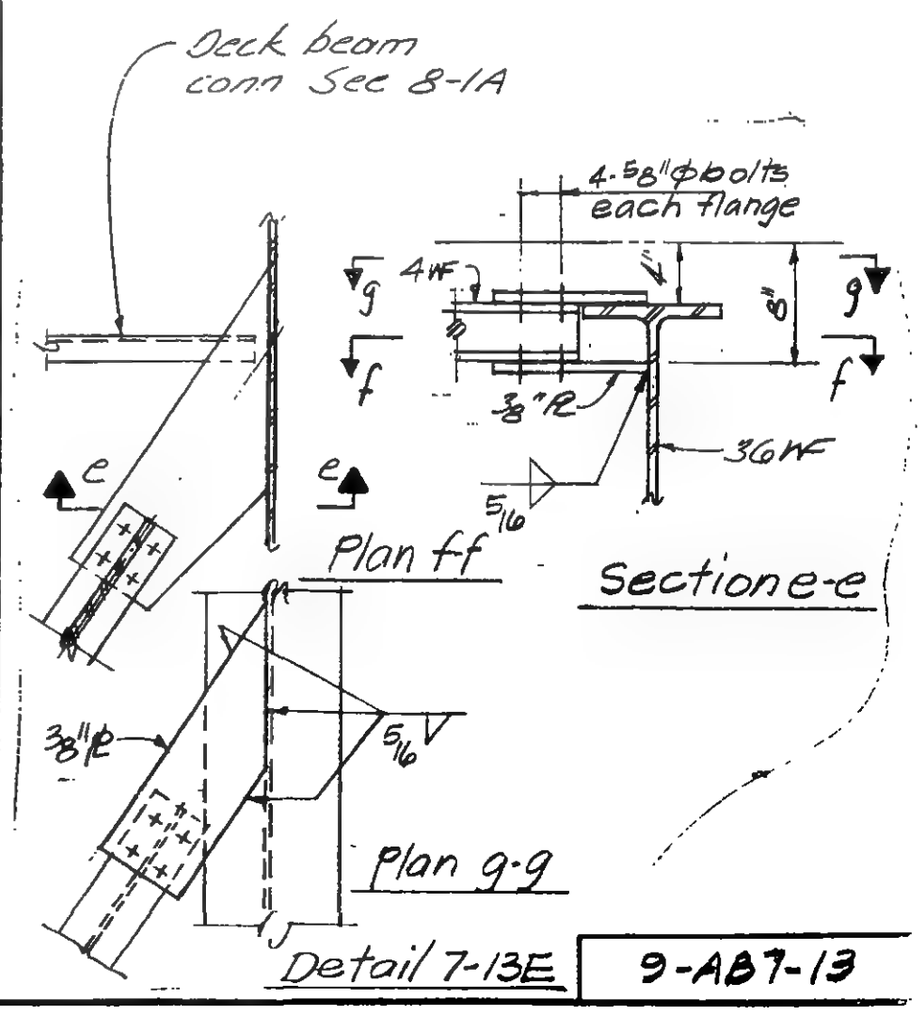

Plan f-f

Section e-e

Plan g-g

Detail 7-13E

9-AB7-13

LICENSED PROFESSIONAL ENGINEER LESLIE E. ROBERTSON No. 34960 UNIVERSITY OF THE STATE OF NEW YORK

DESIGNED

DRAWN F. Smith

REVIEWED W. Brewer

SKILLING, HELLE, CHRISTIANSEN, ROBERTSON — Structural & Civil Engineers

PROJECT THE WORLD TRADE CENTER | TITLE FLOOR 107-PH HORIZONTAL BRACING | DATE 8-3-70

REVISIONS

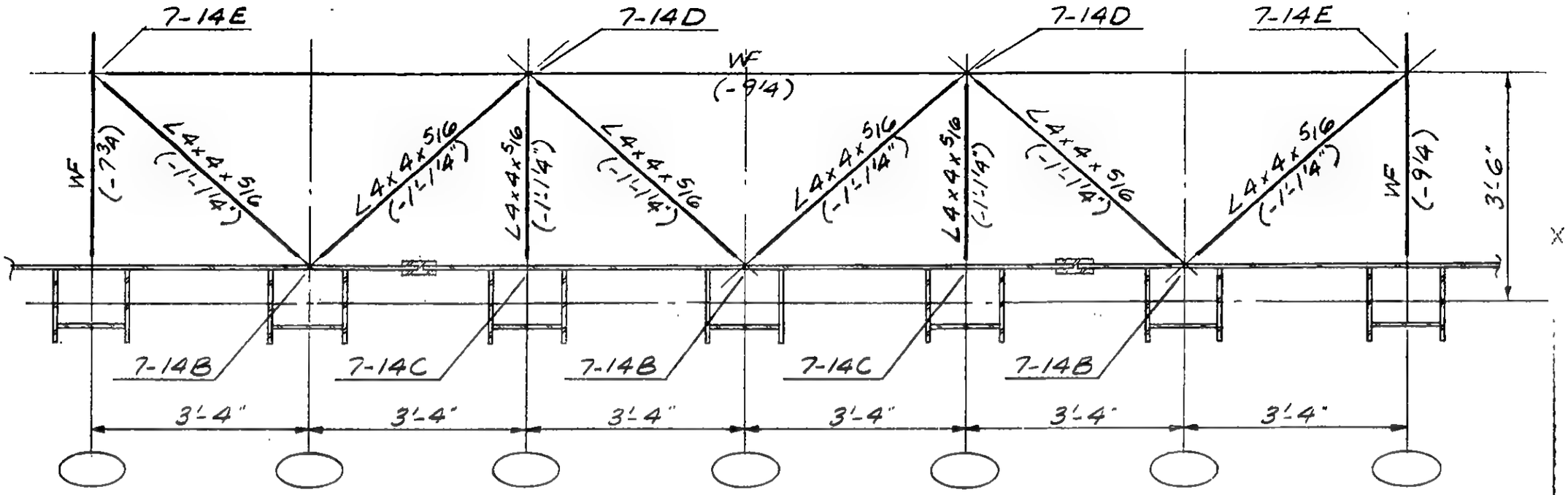

Plan 7-14A

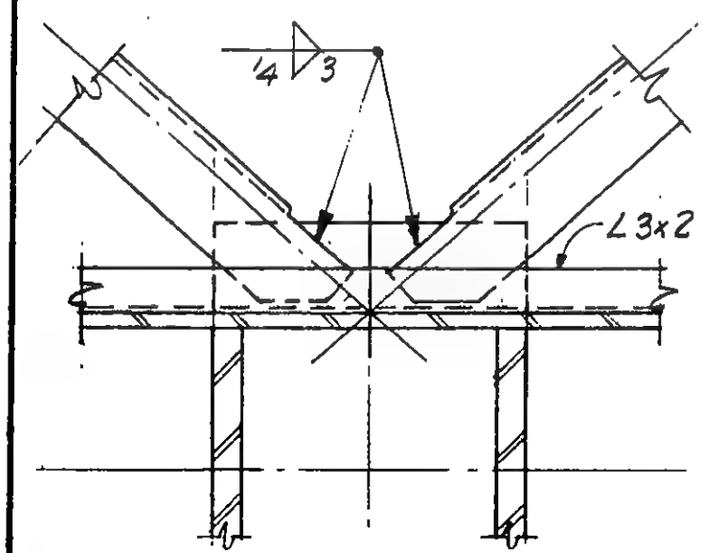

Detail 7-14B

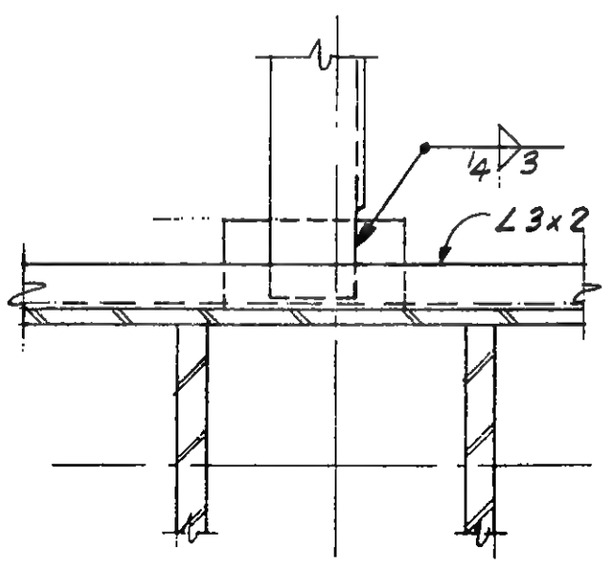

Detail 7-14C

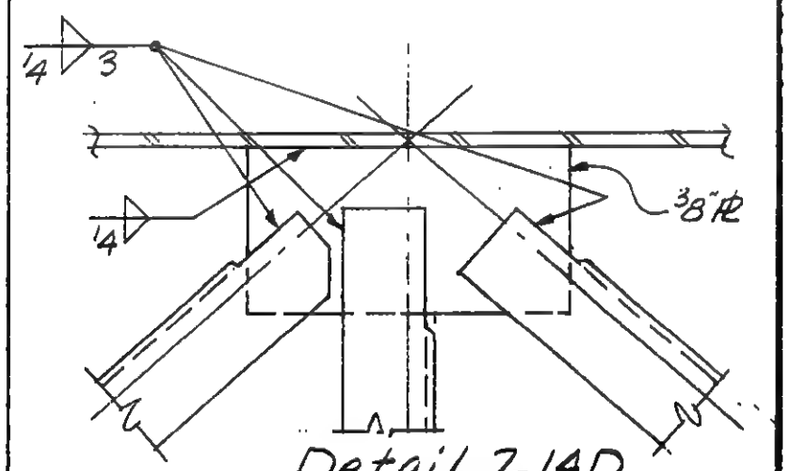

Detail 7-14D

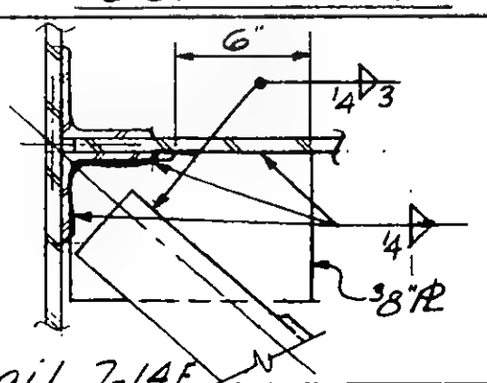

Detail 7-14E

LICENSED PROFESSIONAL ENGINEER LESLIE E. ROBERTSON No. 34960 UNIVERSITY OF THE STATE OF NEW YORK

DESIGNED

DRAWN A. FRANQUI

REVIEWED

9-AB7-14

SKILLING, HELLE, CHRISTIANSEN, ROBERTSON — Structural & Civil Engineers

PROJECT THE WORLD TRADE CENTER | TITLE FLOOR 107-PH HORIZONTAL BRACING | DATE 8-3-70

REVISIONS

12/14/70

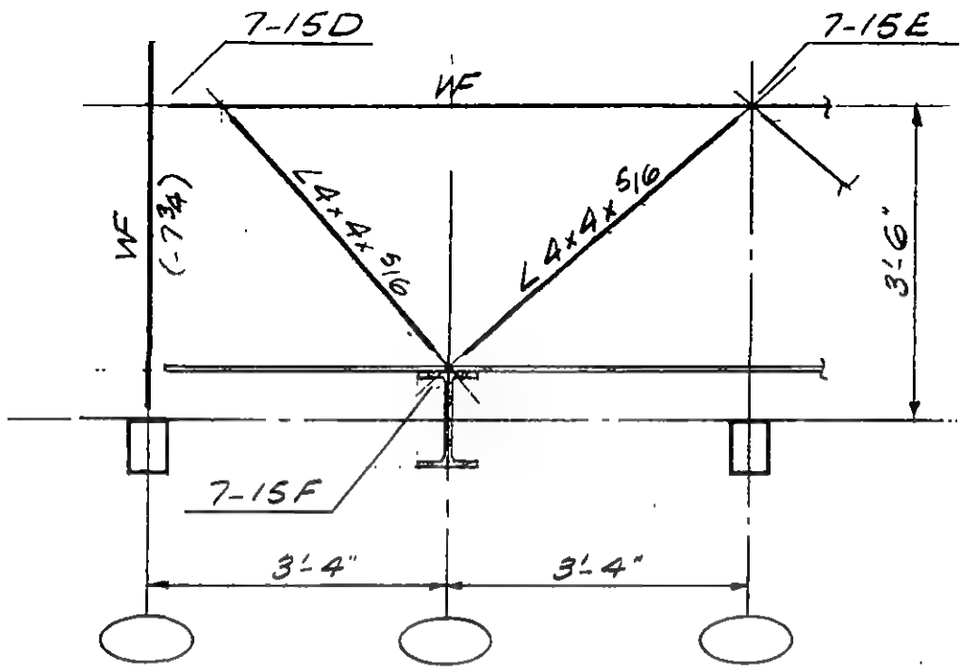

Plan 7-15A
Plan 7-15B opp hand

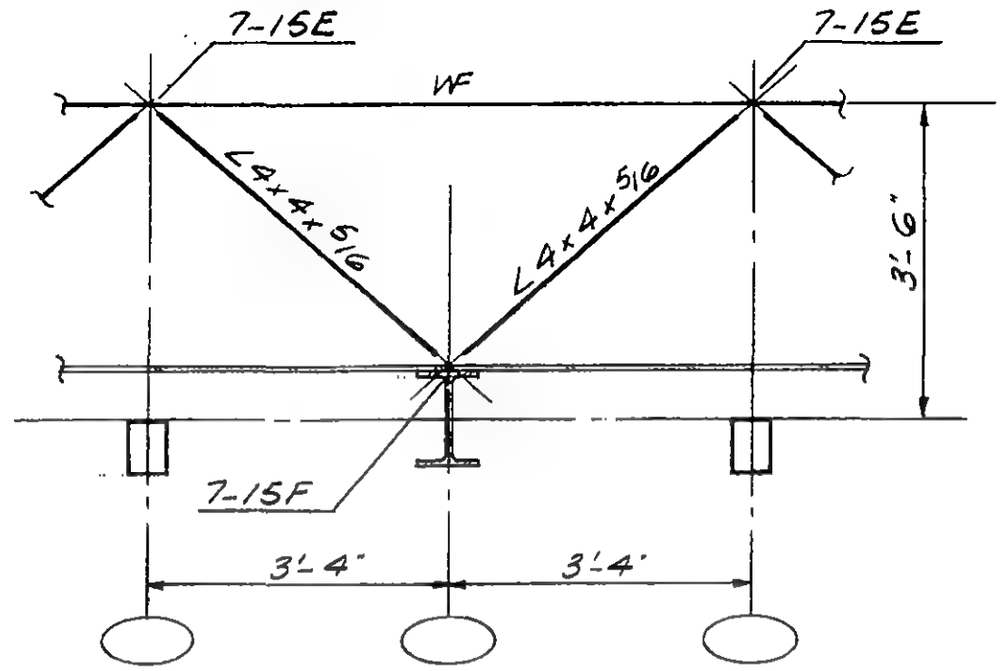

Plan 7-15C

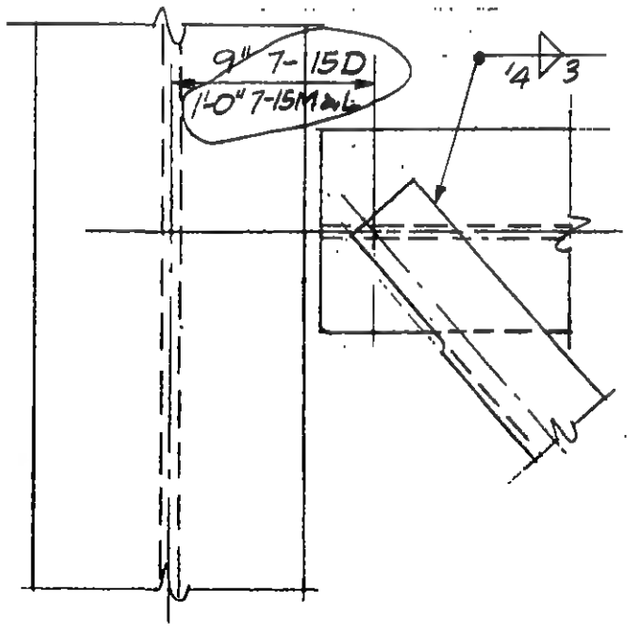

Detail 7-15D & 7-15L
Detail 7-15M, opp. hand

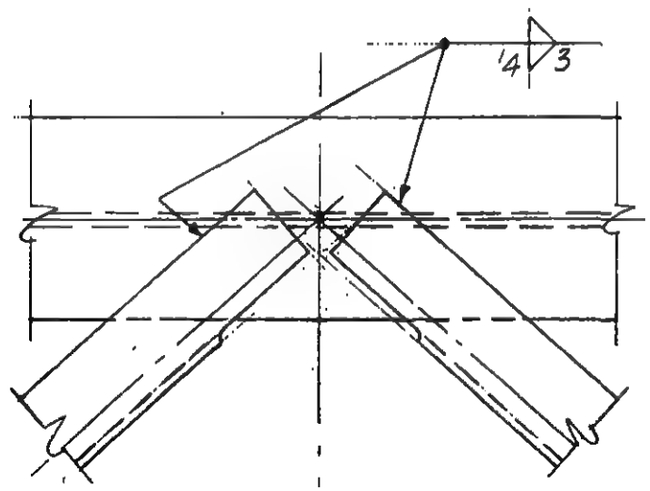

Detail 7-15E

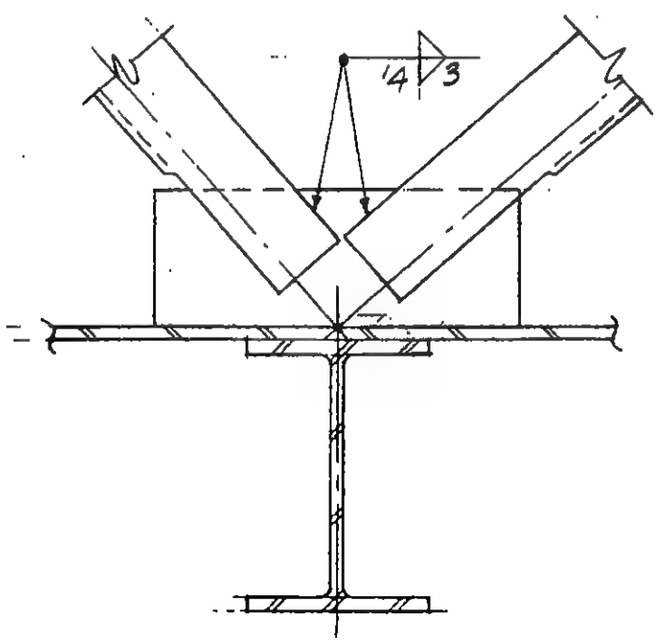

Detail 7-15F

LICENSED PROFESSIONAL ENGINEER
LESLIE E. ROBERTSON
No. 34360
UNIVERSITY OF THE STATE OF NEW YORK

DESIGNED

DRAWN A.FRANQUI

REVIEWED

9-B7-15.1

SKILLING, HELLE, CHRISTIANSEN, ROBERTSON — Structural & Civil Engineers

PROJECT: THE WORLD TRADE CENTER | TITLE: FLOOR 107-PH, HORIZONTAL BRACING | DATE: 12-14-70

REVISIONS

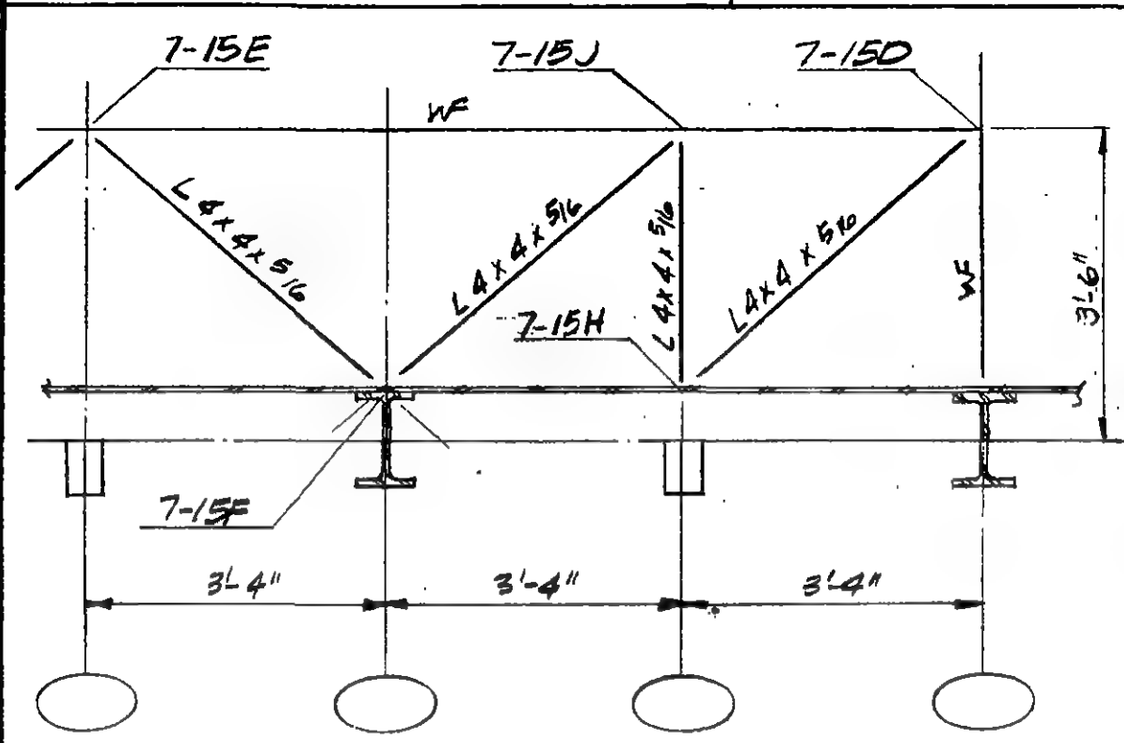

PLAN 7-15G

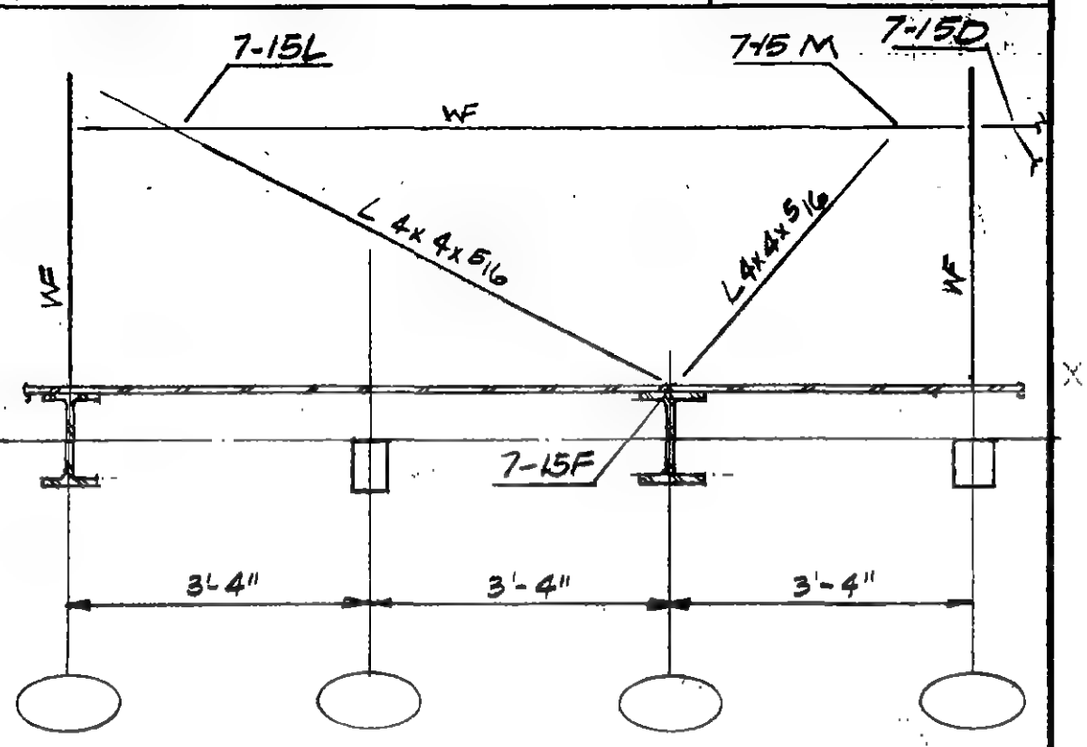

PLAN 7-15K

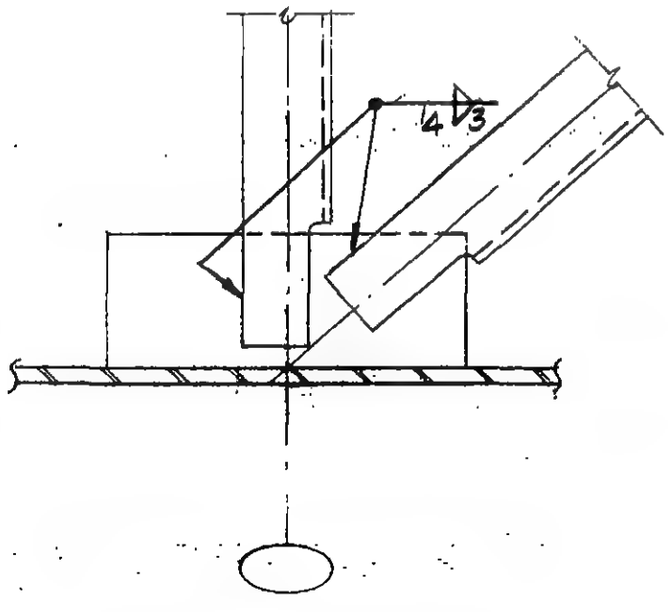

Detail 7-15H

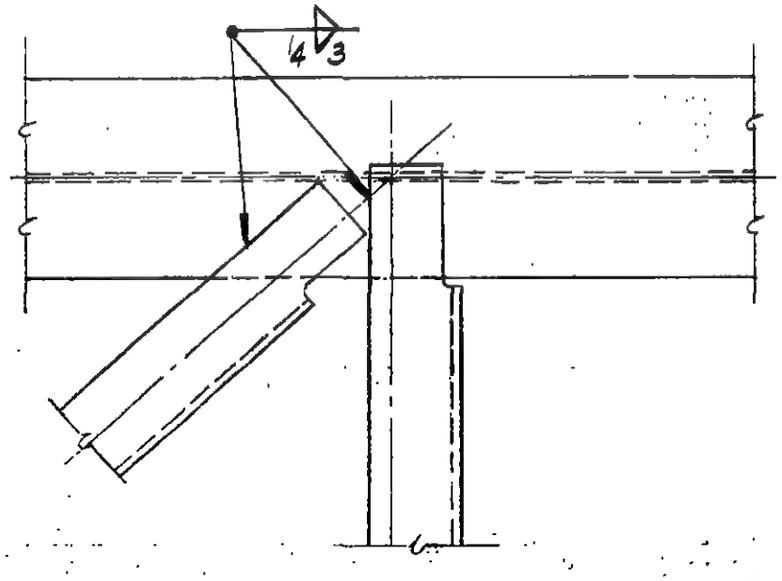

Detail 7-15J

LICENSED PROFESSIONAL ENGINEER
LESLIE E. ROBERTSON
No. 34960
UNIVERSITY OF THE STATE OF NEW YORK

DESIGNED

DRAWN
F. Smith

REVIEWED

9-B7-15.2

SKILLING, HELLE, CHRISTIANSEN, ROBERTSON — Structural & Civil Engineers

PROJECT THE WORLD TRADE CENTER | TITLE FLOOR 107-PH DECK BEAMS & BRIDGING | DATE 4-1-70

REVISIONS

5/27/70
12-14-70

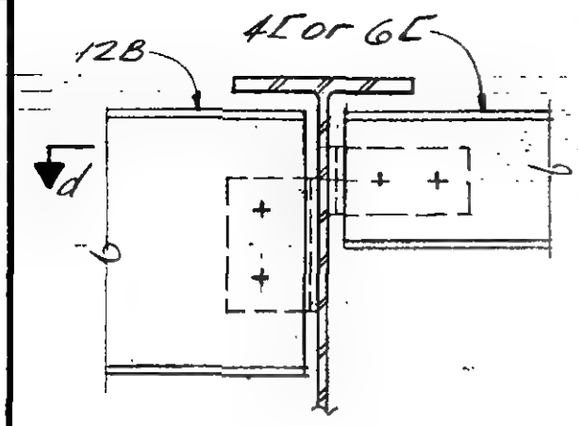

Detail A
12B

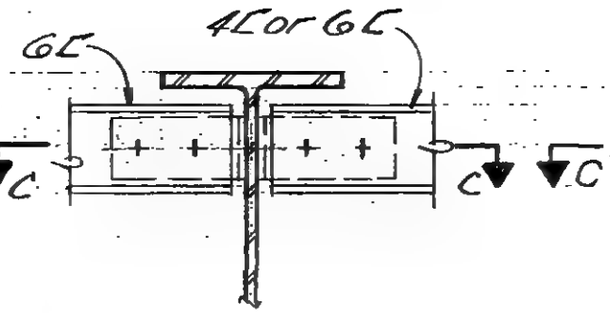

Detail A
6C

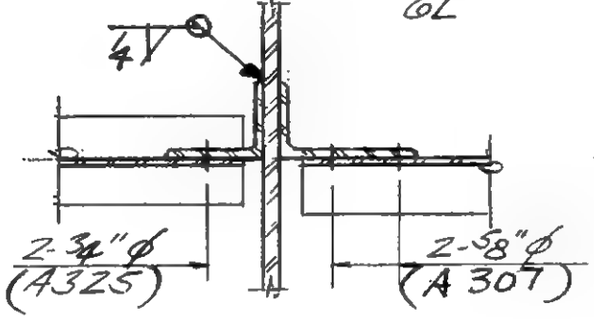

Section d-d

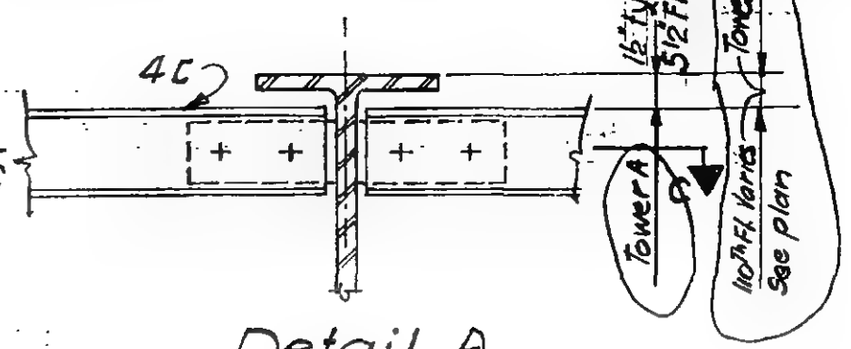

Detail A
4C

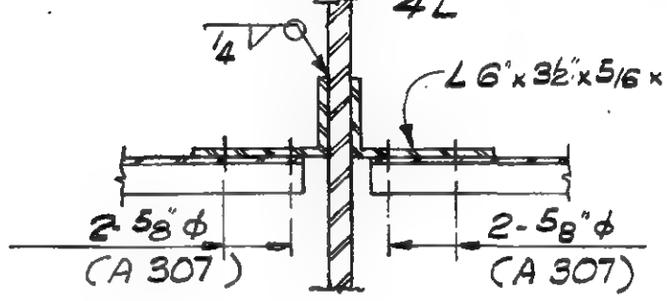

Section c-c

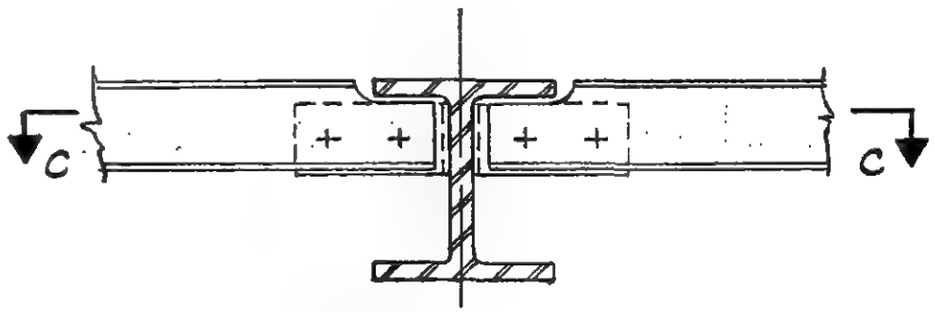

Detail B

LICENSED PROFESSIONAL ENGINEER
LESLIE E. ROBERTSON
No. 34360
UNIVERSITY OF THE STATE OF NEW YORK

DESIGNED

DRAWN
H. Nichols

REVIEWED
W Brewer

9-AB8-1

SKILLING, HELLE, CHRISTIANSEN, ROBERTSON — Structural & Civil Engineers

PROJECT THE WORLD TRADE CENTER | TITLE FLOOR 107-PH. DECK BEAMS & BRIDGING | DATE 4-1-70

VISIONS

5/27/70

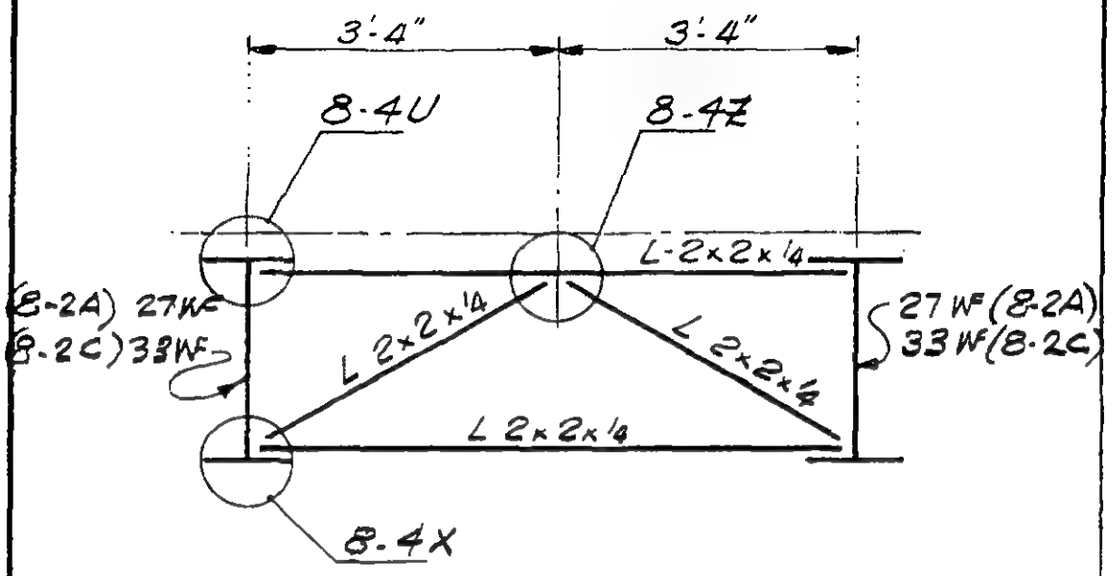

Bridging 8-2A & 8-2C

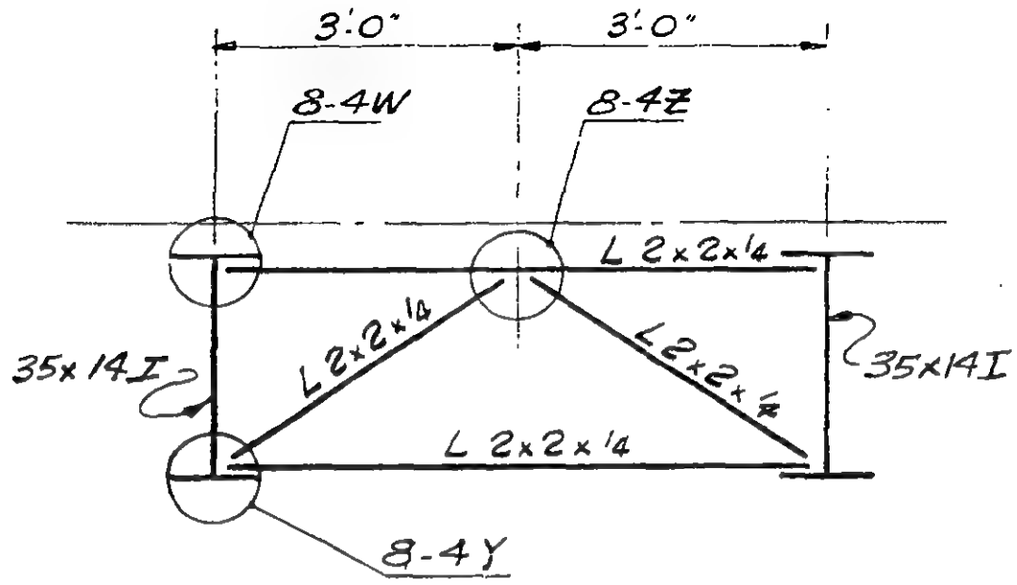

Bridging 8-2M

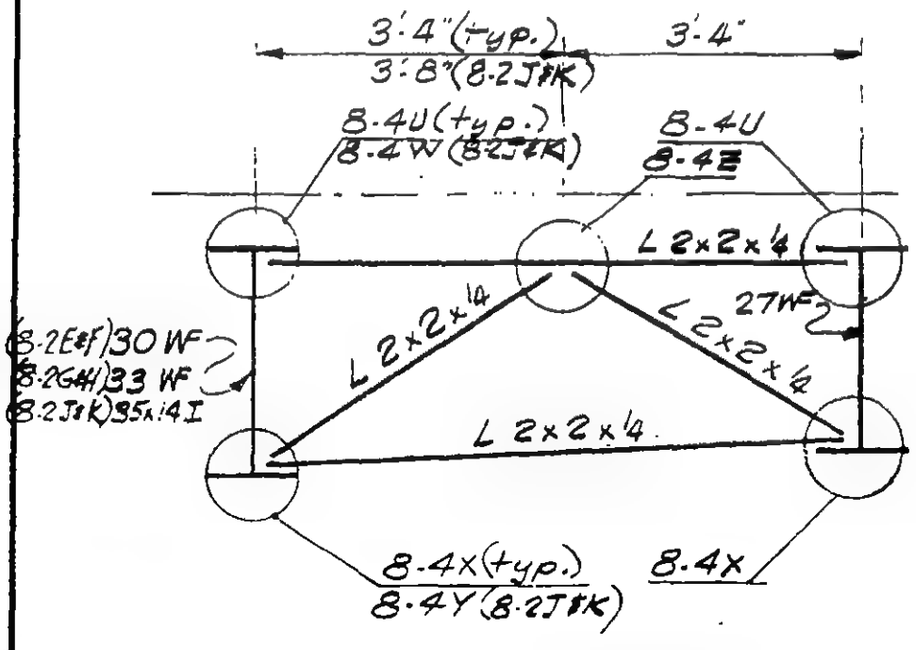

Bridging 8-2E, 8-2G, 8-2J
Bridging 8-2F, 8-2H, 8-2K opp. hand

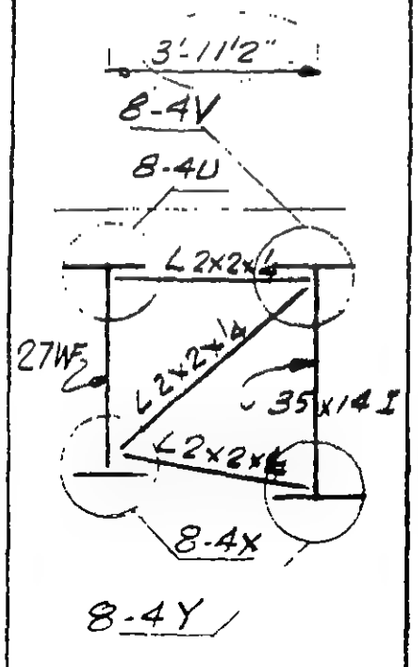

Bridging 8-2Q
Bridging 8-2R
opp. hand

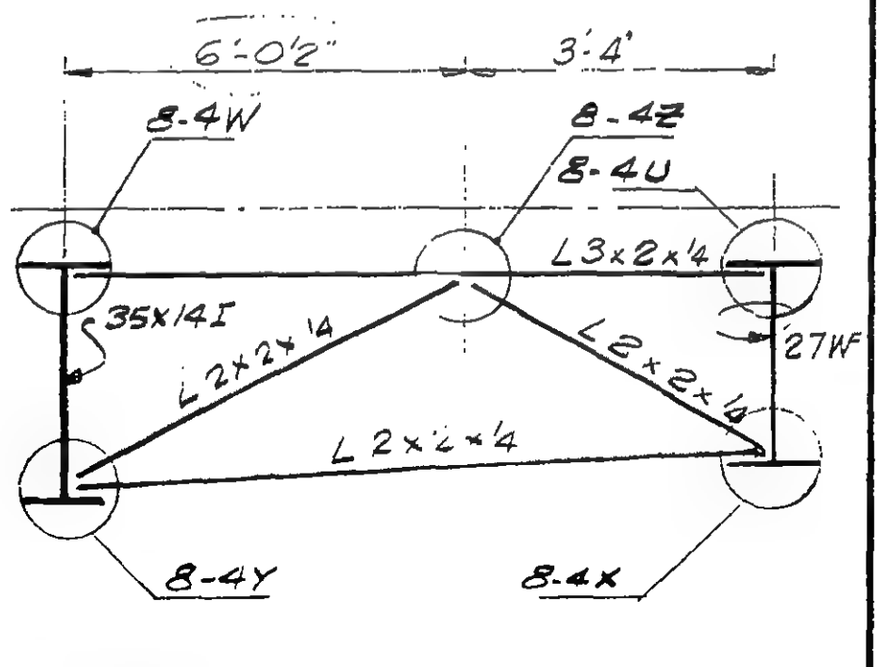

Bridging 8-2N
Bridging 8-2P opp. hand

LICENSED PROFESSIONAL ENGINEER — LESLIE E. ROBERTSON — No 34360 — UNIVERSITY OF THE STATE OF NEW YORK

SIGNED

DRAWN M. Nichols

REVIEWED W. Brew

9-AB8-2

SKILLING, HELLE, CHRISTIANSEN, ROBERTSON — Structural & Civil Engineers

PROJECT THE WORLD TRADE CENTER | TITLE FL.107-PH DECK BEAMS & BRIDGING | DATE 4-1-70

REVISIONS

5/27/70

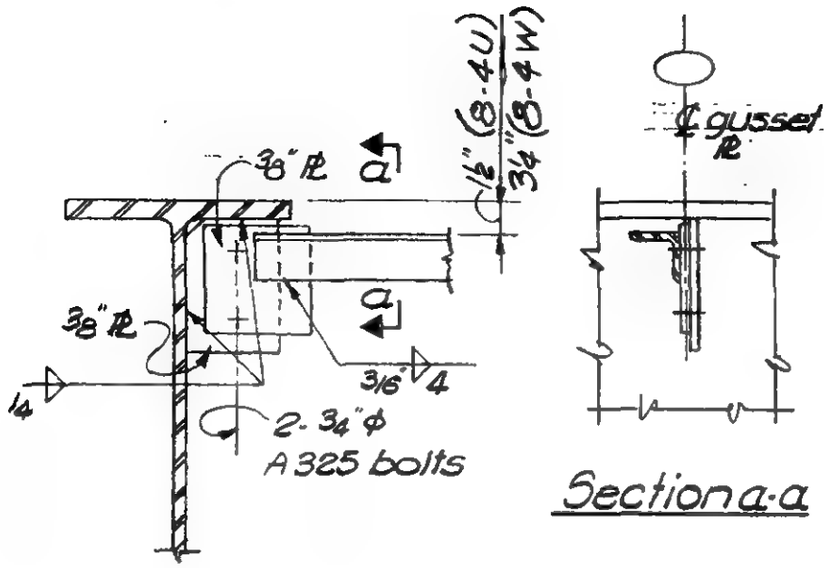

Section a-a

Detail 8-4U & 8-4W

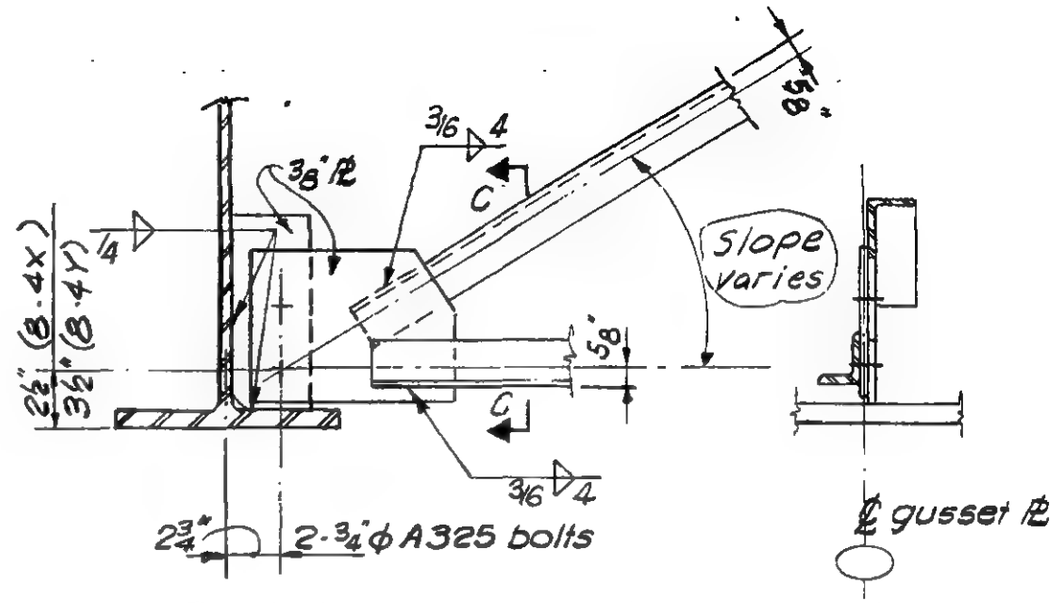

Detail 8-4X & 8-4Y

Section c-c

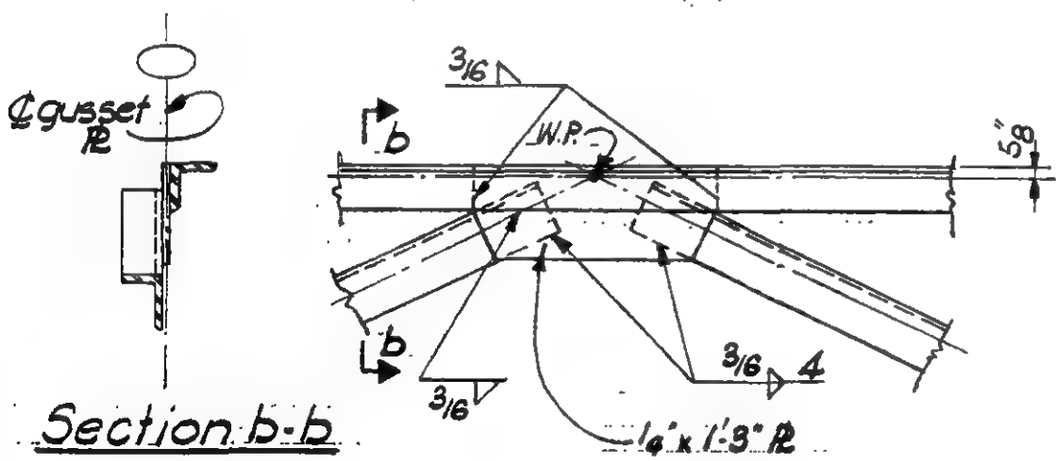

Section b-b

Detail 8-4Z

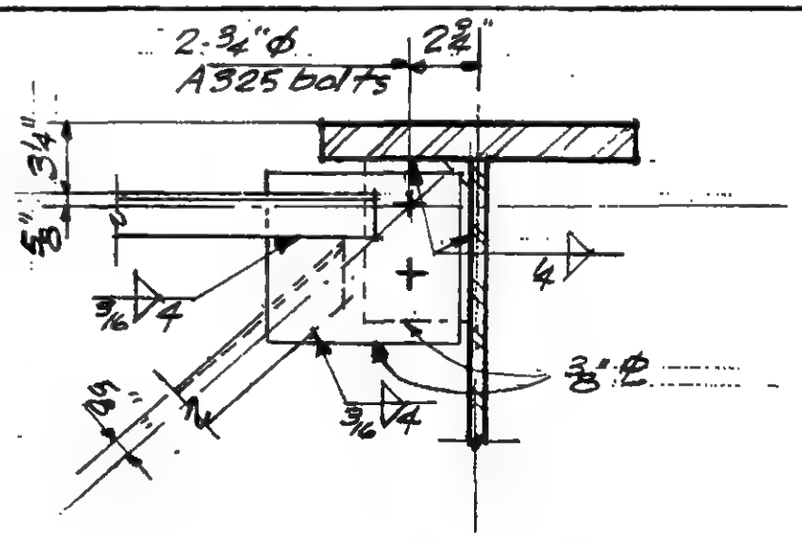

DETAIL 8-4Y

LICENSED PROFESSIONAL ENGINEER — LESLIE E. ROBERTSON — No 34360 — UNIVERSITY OF THE STATE OF NEW YORK

DESIGNED

DRAWN M. Nichols

REVIEWED W Brewer

9-AB8-4

SKILLING HELLE CHRISTIANSEN, ROBERTSON — Structural & Civil Engineers

PROJECT THE WORLD TRADE CENTER | TITLE FL. 107-PH BRIDGING DETAILS | DATE 4-[illegible]

VISIONS

6/15/70

7-15-70

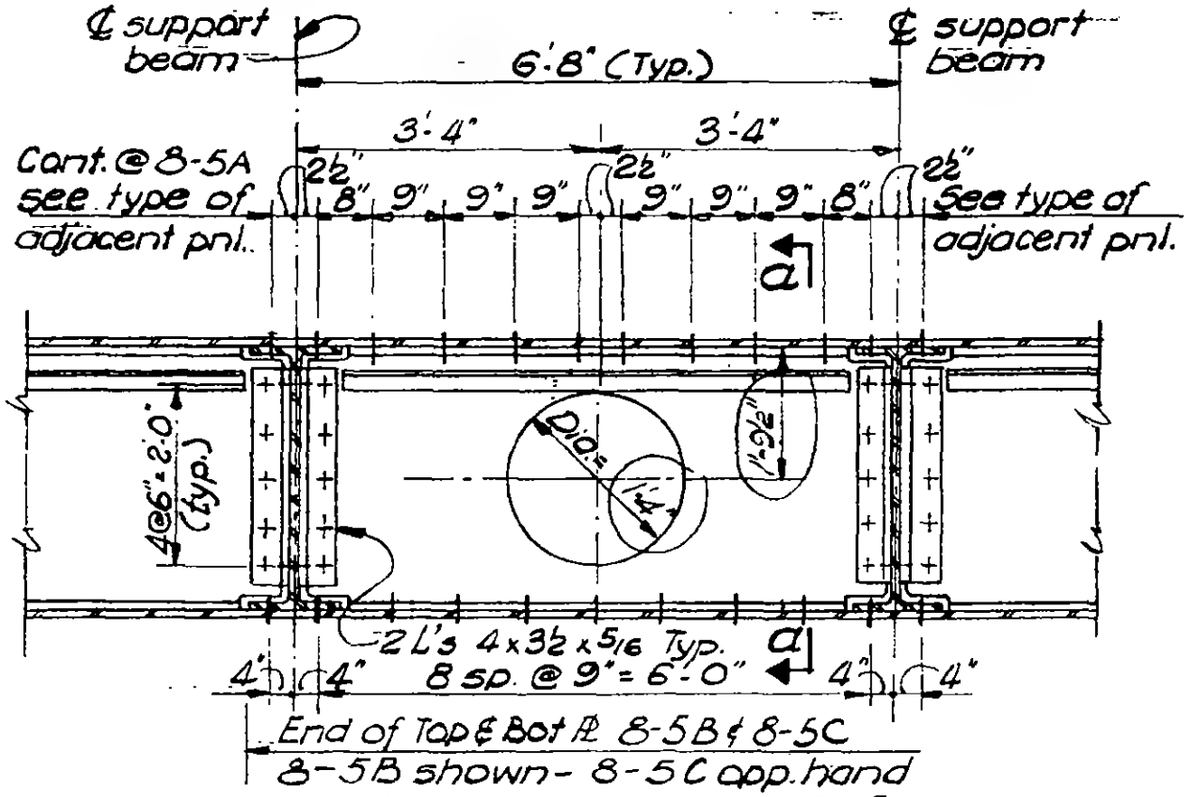

8-5B shown - 8-5C opp. hand

DETAILS 8-5A, 5B, 5C

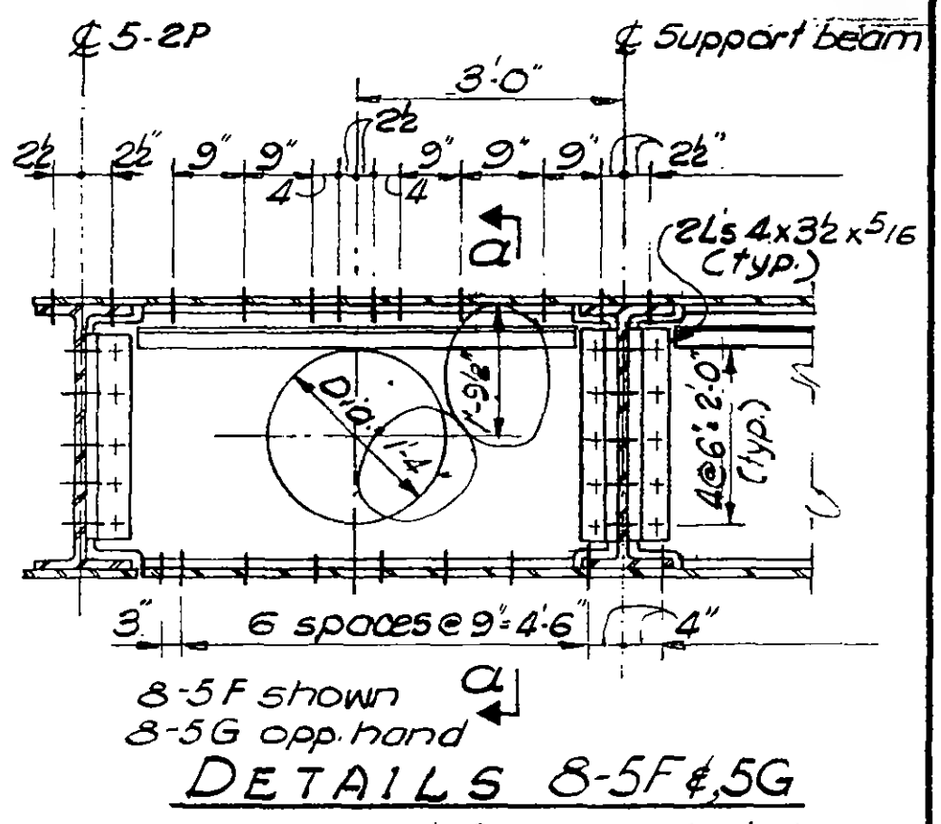

8-5F shown
8-5G opp. hand

DETAILS 8-5F & 5G

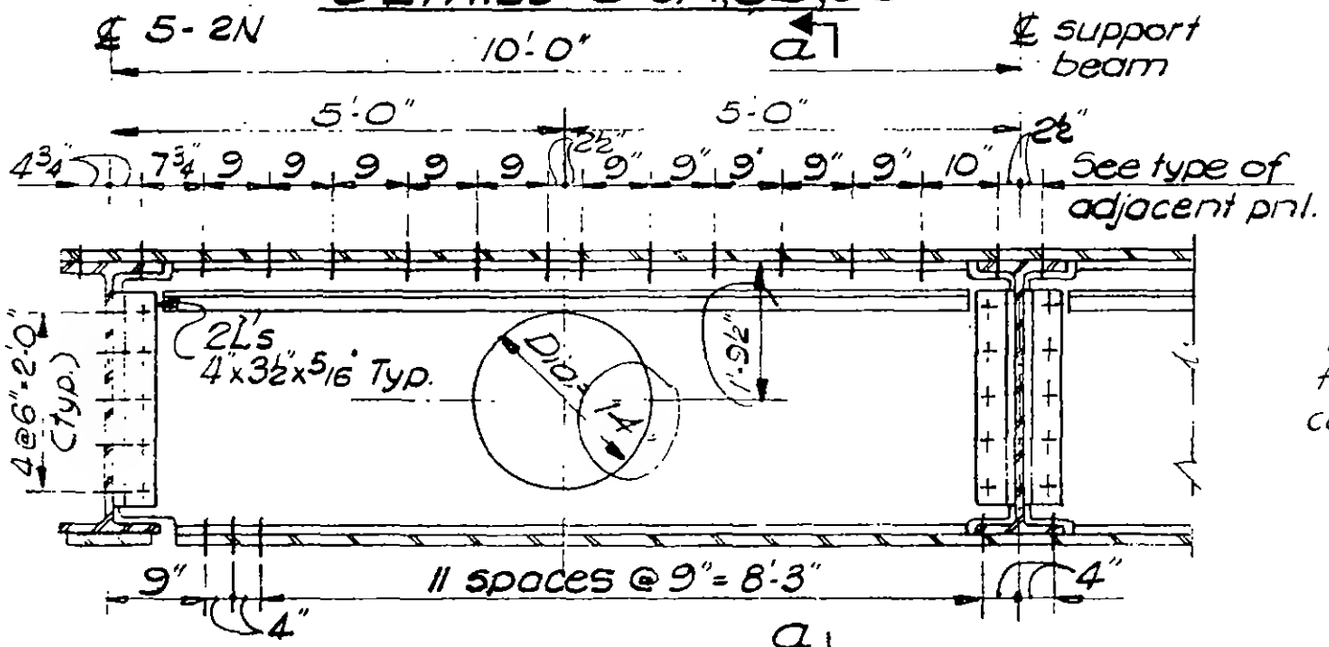

Detail 8-5D shown
Detail 8-5E opp hand

DETAILS 8-5D & 5E

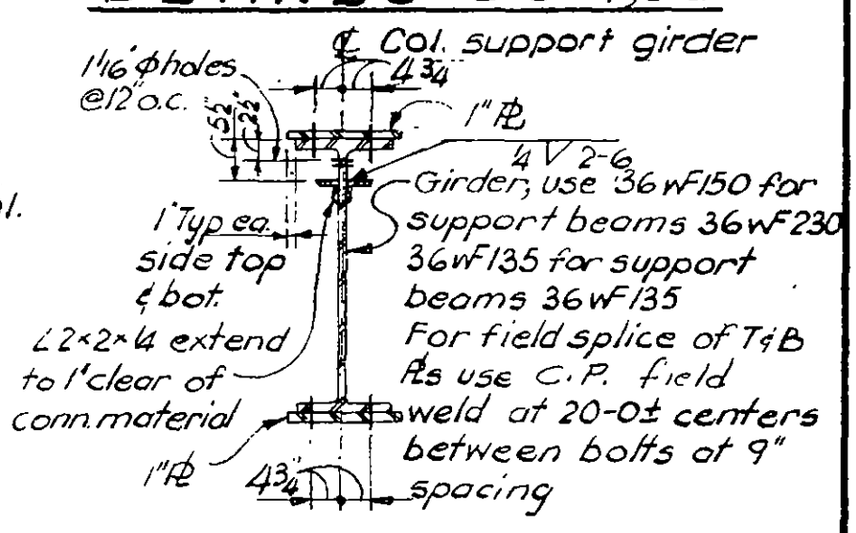

Section a-a Typ.

Note:
All bolts ¾" ϕ unless noted

LICENSED PROFESSIONAL ENGINEER LESLIE E. ROBERTSON No 34360 UNIVERSITY OF THE STATE OF NEW YORK

DESIGNED

DRAWN M. Nichols

REVIEWED

9-AB8-5.1

SKILLING, HELLE, CHRISTIANSEN, ROBERTSON — Structural & Civil Engineers

PROJECT: THE WORLD TRADE CENTER | TITLE: FL. 107-PH BRIDGING DETAILS | DATE: 8-11-70

VISIONS

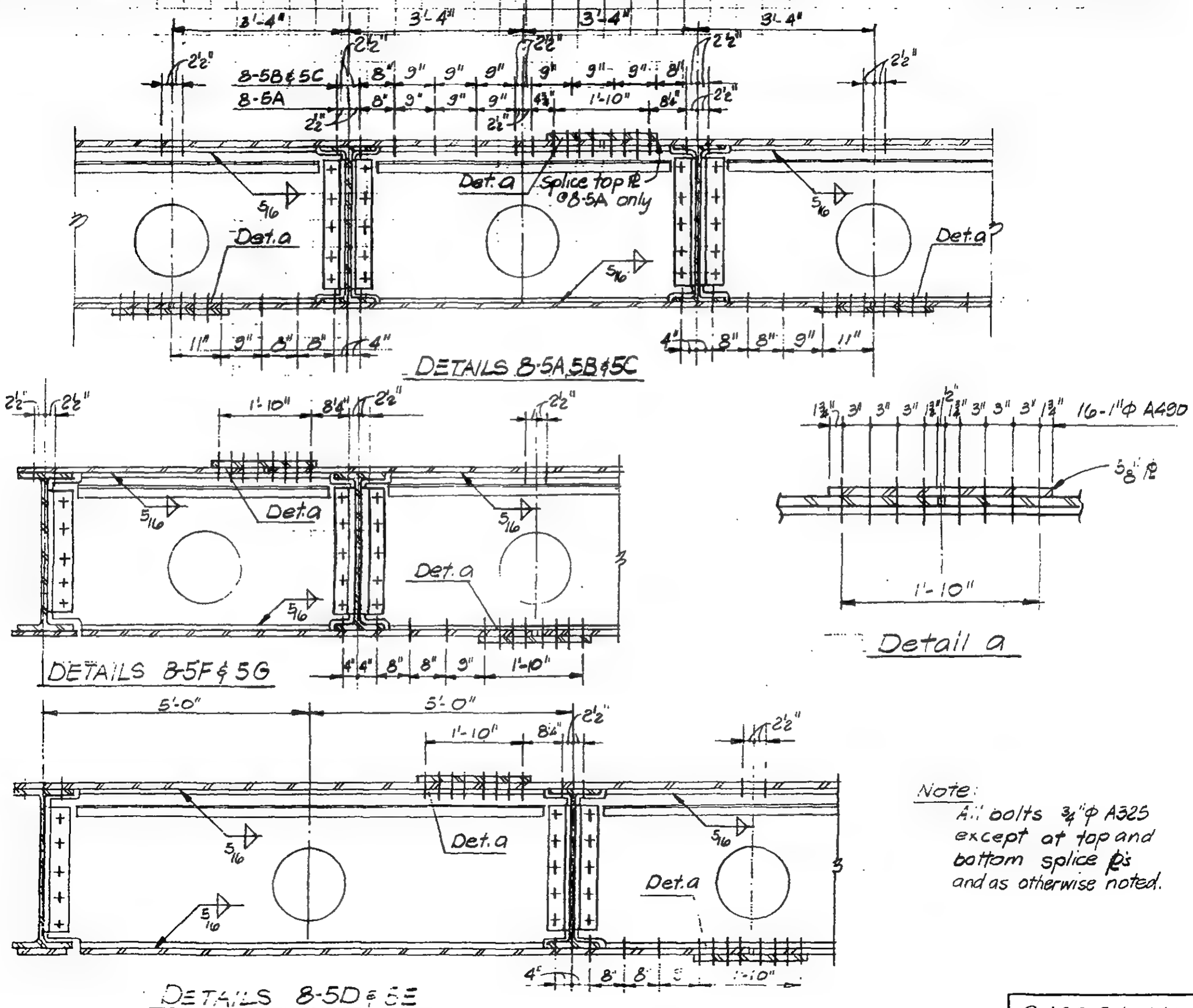

Note:
All bolts ¾"Φ A325 except at top and bottom splice PL's and as otherwise noted.

LICENSED PROFESSIONAL ENGINEER
LESLIE E. ROBERTSON
No 34360
UNIVERSITY OF THE STATE OF NEW YORK

DESIGNED

DRAWN
O. Ozdu

REVIEWED

9-AB8-5.1 Alt.

SKILLING, HELLE, CHRISTIANSEN, ROBERTSON — Structural & Civil Engineers

PROJECT: THE WORLD TRADE CENTER | TITLE: FL. 107-PH. BRIDGING DETAILS | DATE: 4-1-70

DIVISIONS

6/15/70

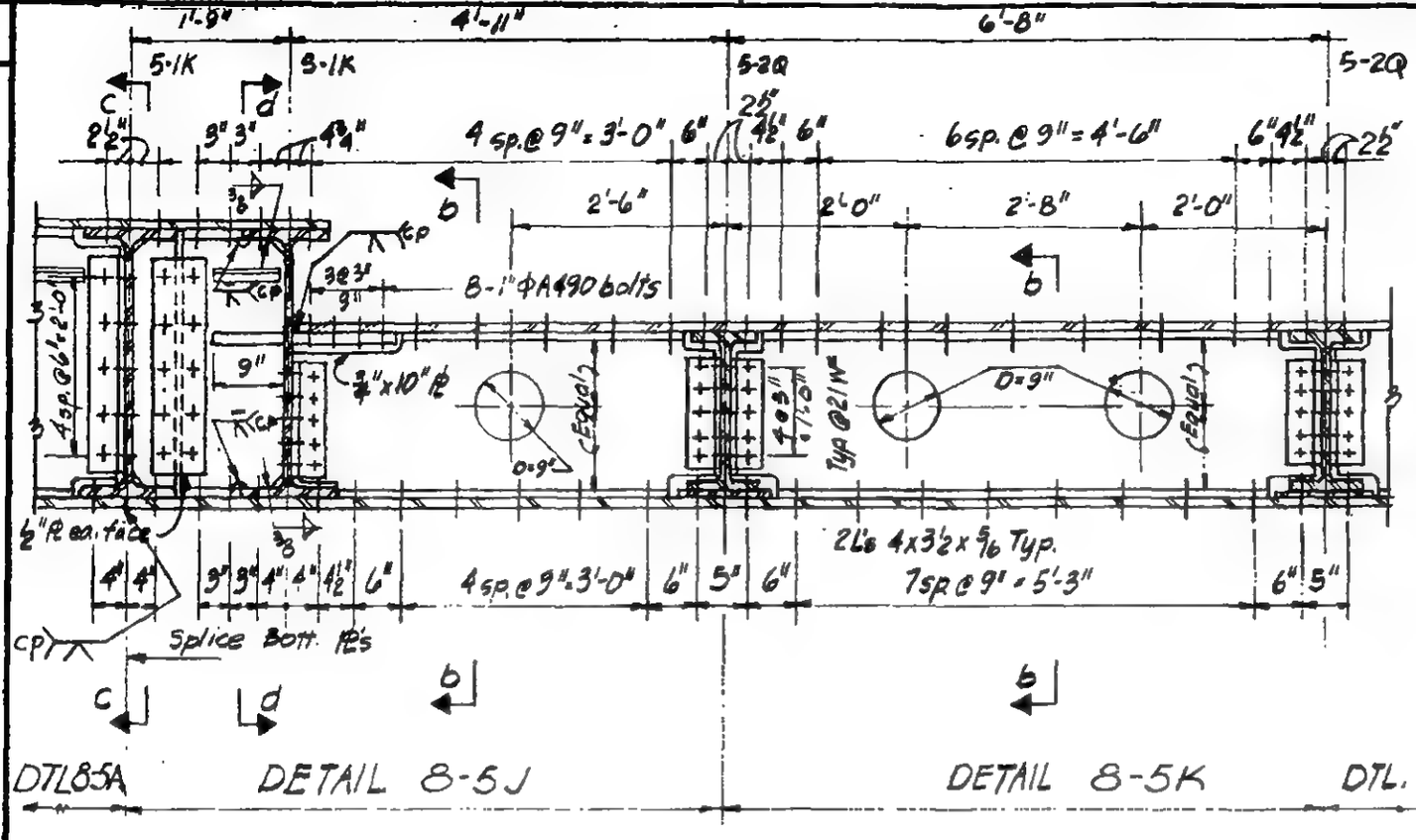

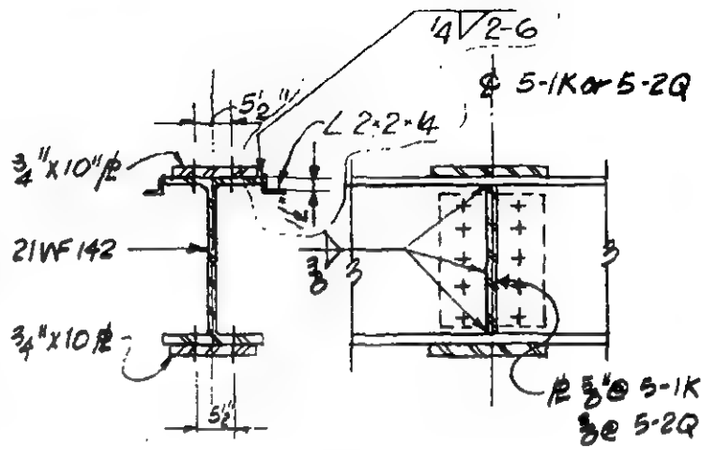

Section b-b — Section cc

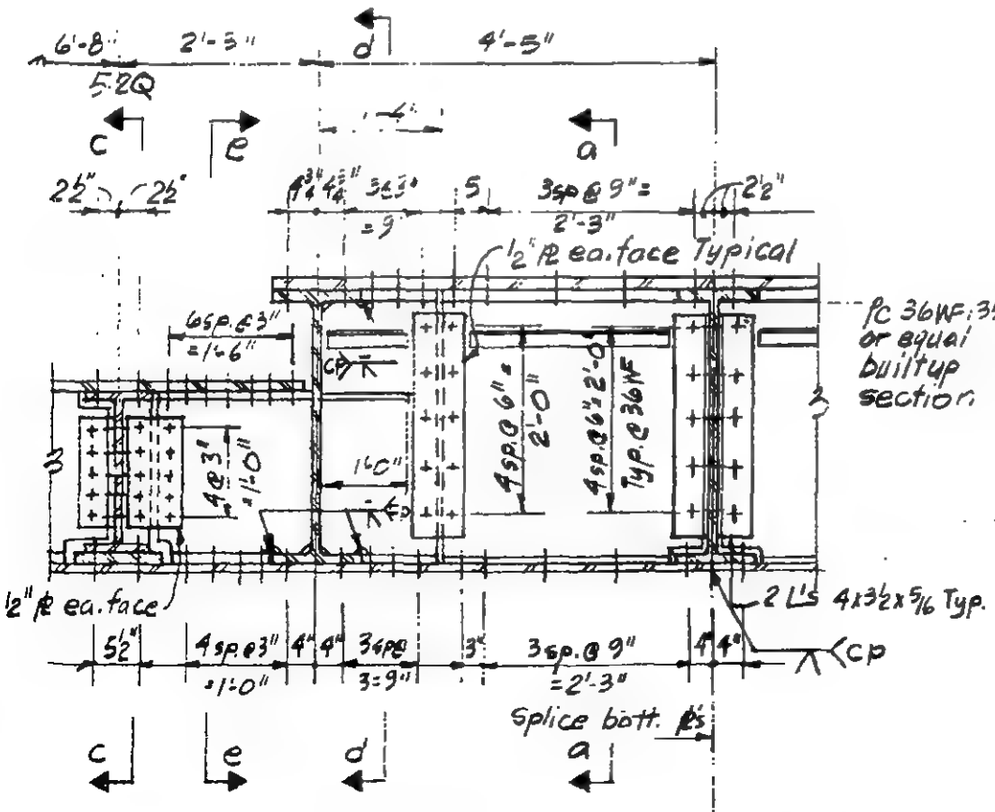

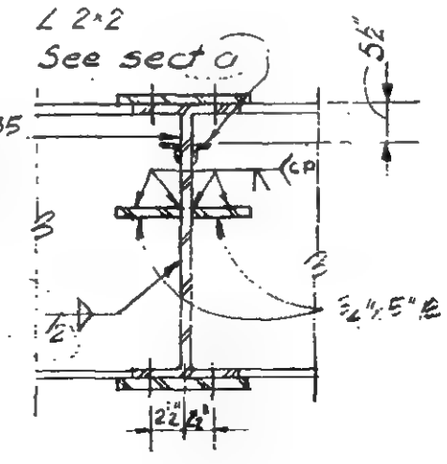

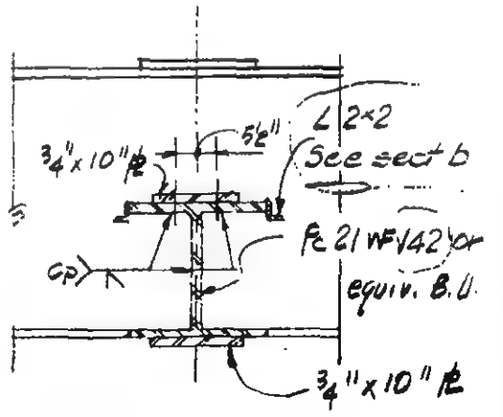

Note:
All bolts ¾" Φ unless otherwise noted

LICENSED PROFESSIONAL ENGINEER — LESLIE E. ROBERTSON — No 34360 — UNIVERSITY OF THE STATE OF NEW YORK

SIGNED

DRAWN: P.M. Ozeki

REVIEWED

9-AB8-5.2

SKILLING, HELLE, CHRISTIANSEN, ROBERTSON — Structural & Civil Engineers

PROJECT: THE WORLD TRADE CENTER | TITLE: FL. 105TH BRIDGING DETAILS | DATE: 3-11-70

DIVISIONS

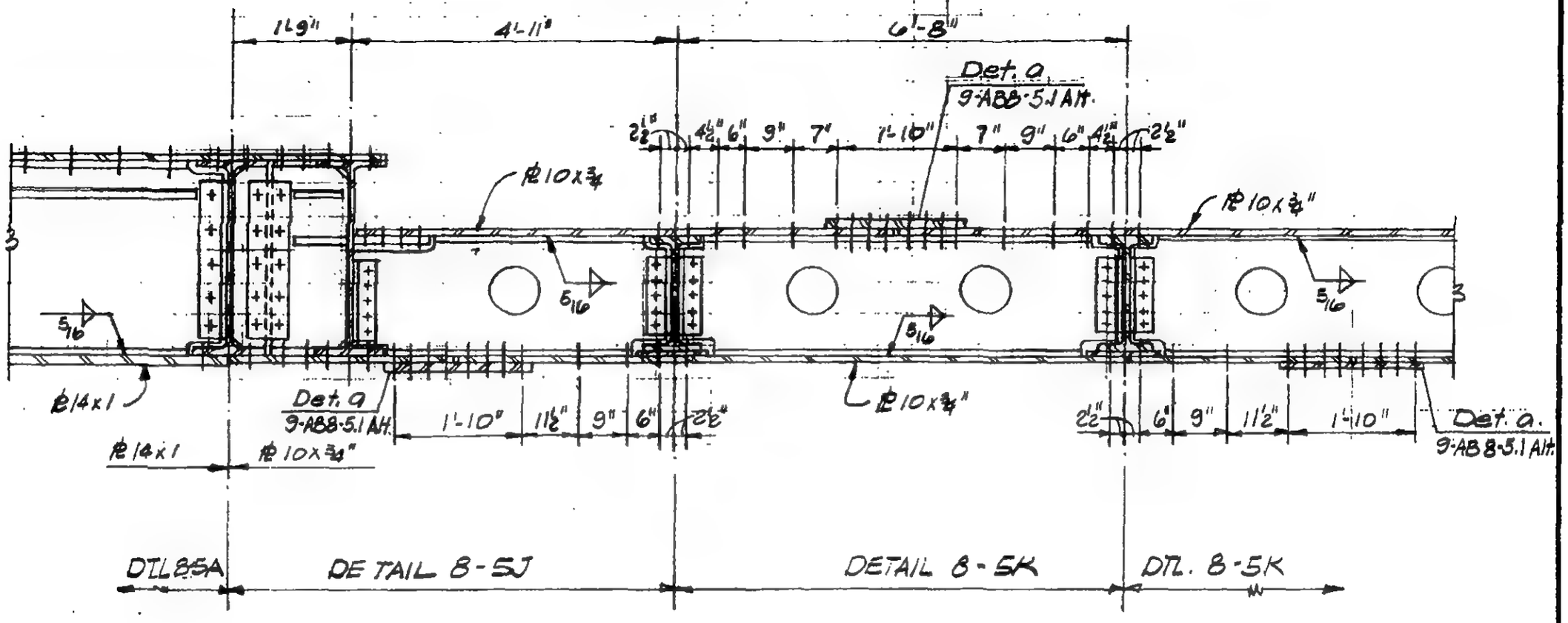

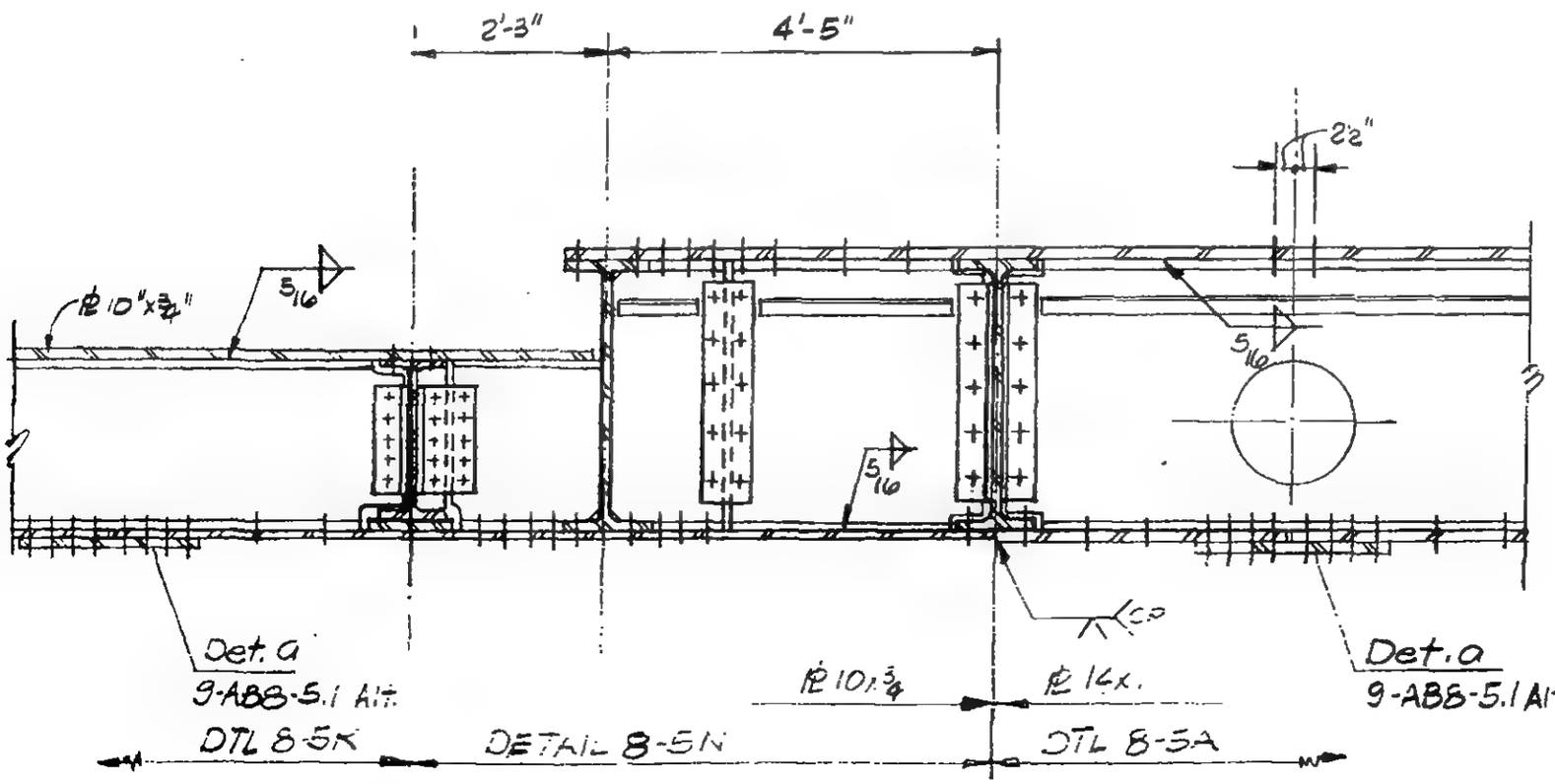

Note:
All bolts ¾" ϕ A325 except at top and bottom splice or as otherwise noted.

LICENSED PROFESSIONAL ENGINEER — LESLIE E. ROBERTSON — NO 34360 — UNIVERSITY OF THE STATE OF NEW YORK

SIGNED

DRAWN

REVIEWED

9-AB8-5.2 A.F.

SKILLING, HELLE, CHRISTIANSEN, ROBERTSON — Structural & Civil Engineers

PROJECT: THE WORLD TRADE CENTER | TITLE: FL.107-PYBRIDGING DETAILS | DATE: 12-14-70

VISIONS

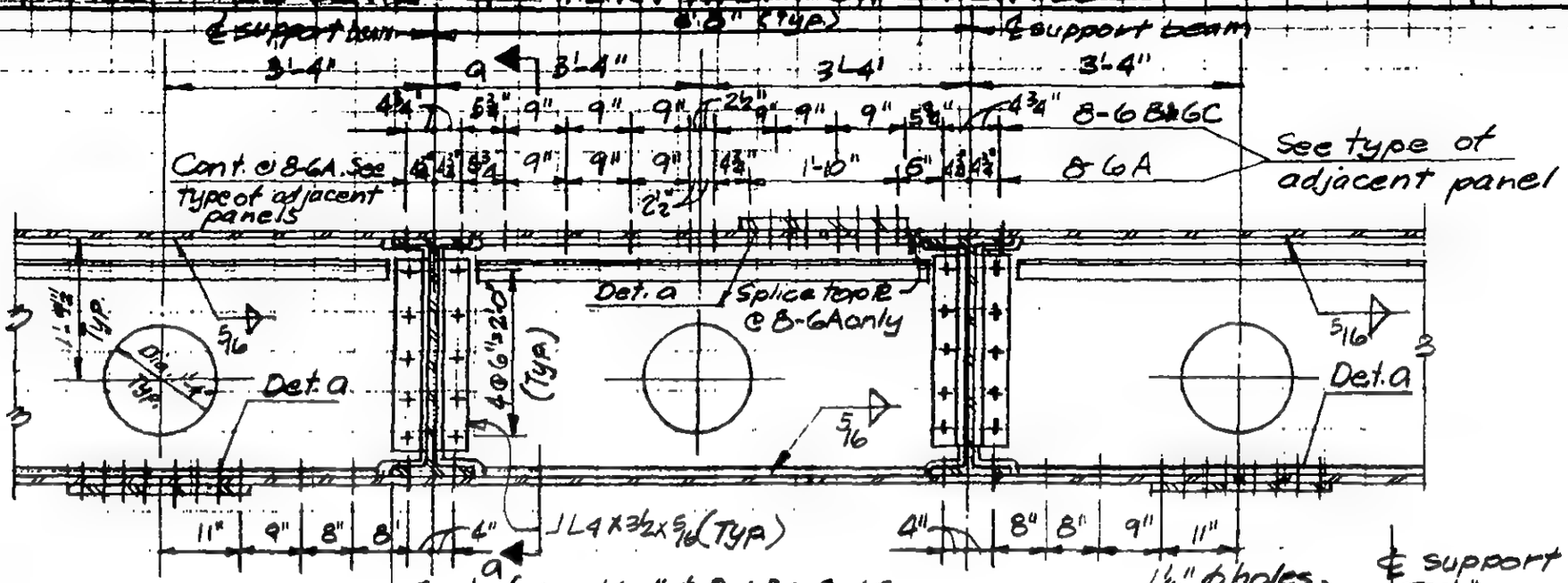

Details 8-6A, 6B, 6C

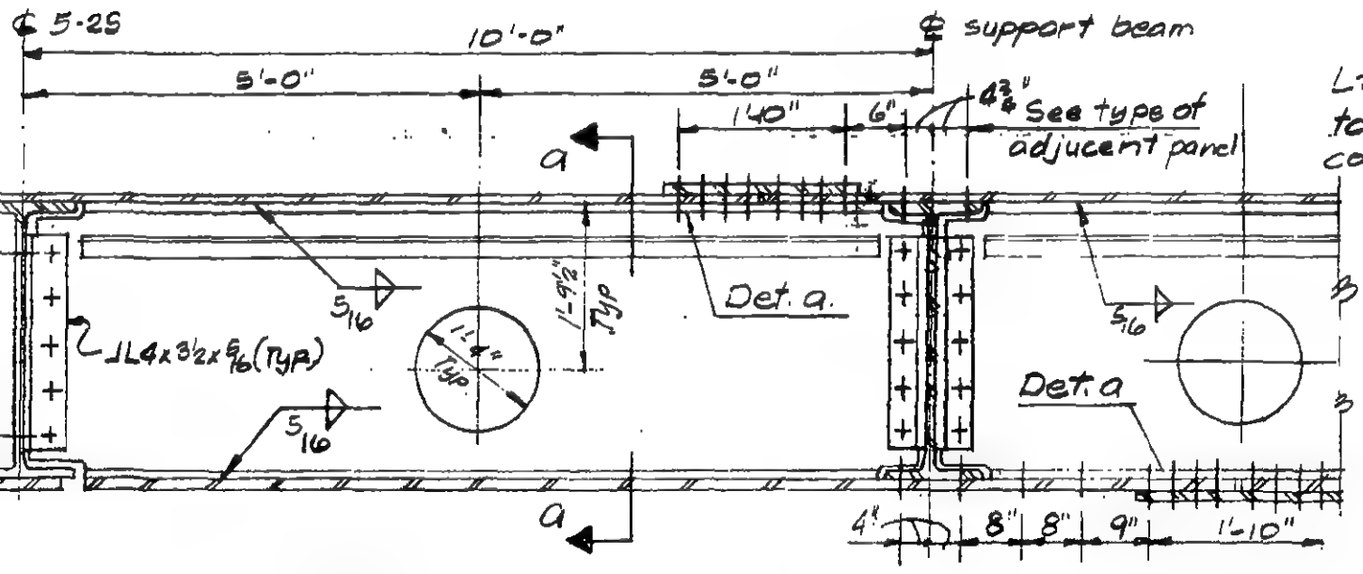

Detail 8-6D shown
Detail 8-6E opp. hand

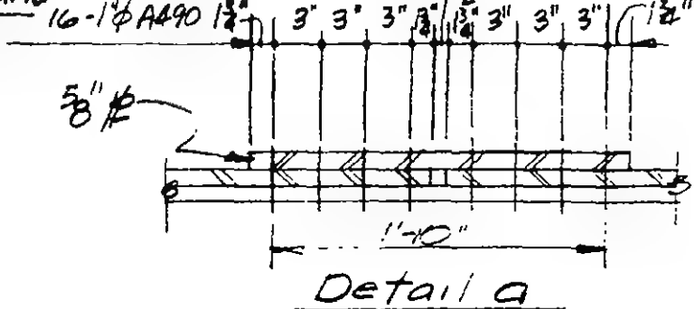

Detail a

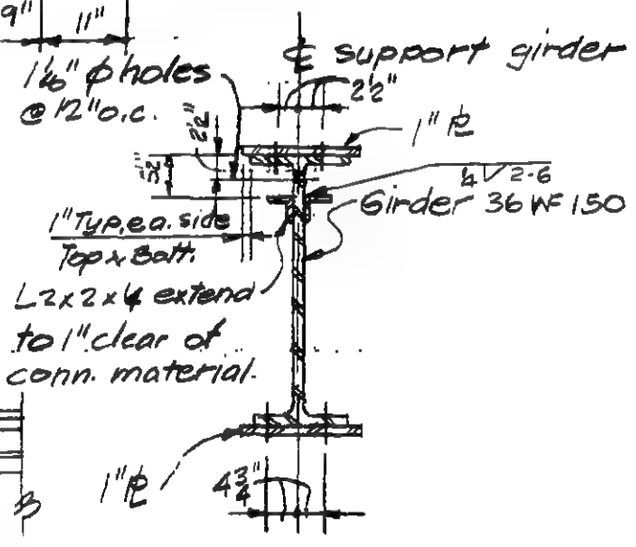

Section a-a

Note:
All bolts ¾"ϕ A325 except at top and bottom splice PL's and as otherwise noted

LICENSED PROFESSIONAL ENGINEER — LESLIE E. ROBERTSON — No 34360 — UNIVERSITY OF THE STATE OF NEW YORK

DESIGNED

DRAWN

REVIEWED

9-88-6

SKILLING, HELLE, CHRISTIANSEN, ROBERTSON — Structural & Civil Engineers

PROJECT: THE WORLD TRADE CENTER | TITLE: FL 107-PH - LOUVER SUPPORTS - ELEVATION WALL 100 | DATE: 4-1-70

REVISIONS

6/15/70 R
2/5/71

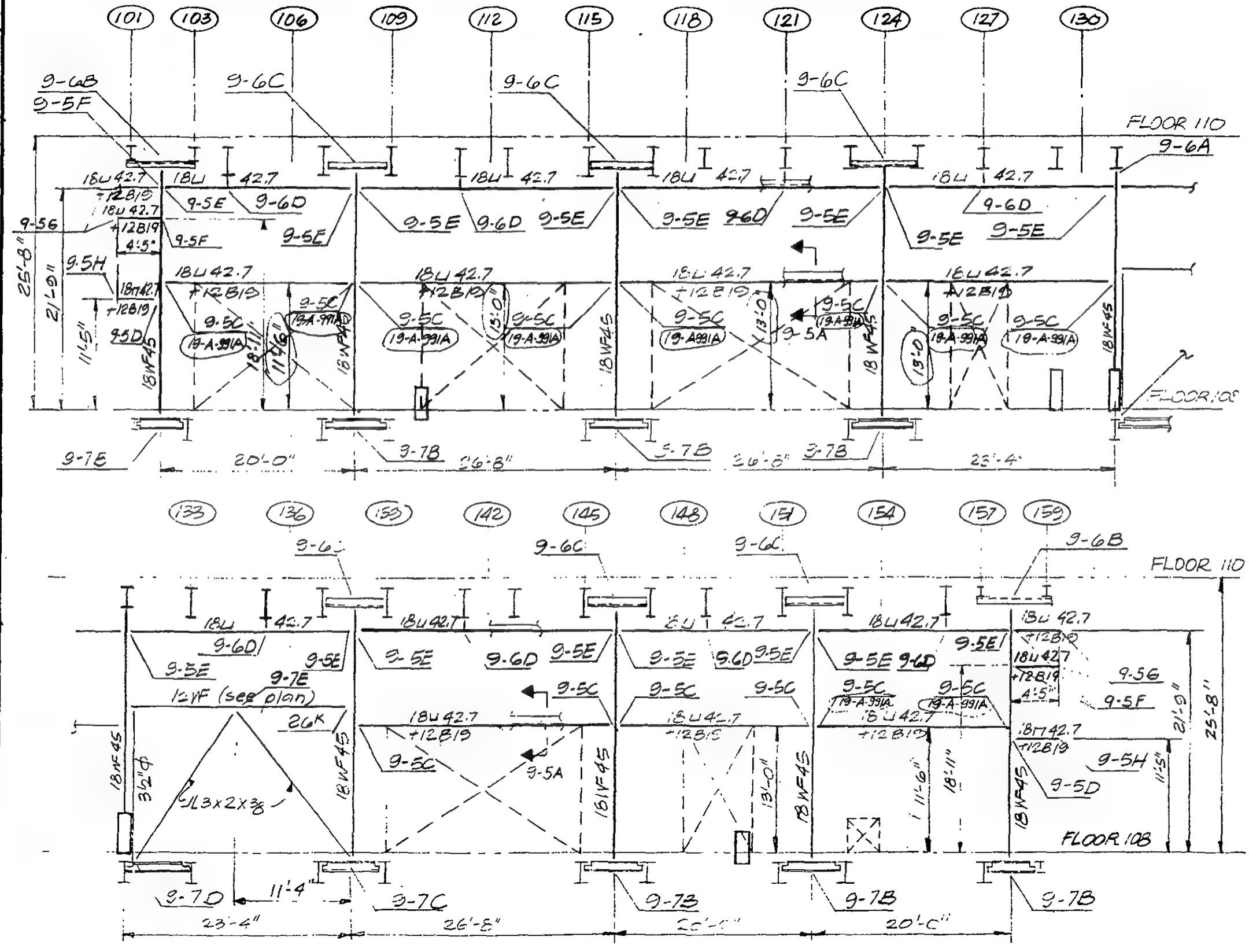

Note. 19-A-911 details apply to Tower A only

9-AB9-1

LICENSED PROFESSIONAL ENGINEER
LESLIE E. ROBERTSON
No 34360
UNIVERSITY OF THE STATE OF NEW YORK

DESIGNED

DRAWN
P. Ozeh

REVIEWED

SKILLING, HELLE, CHRISTIANSEN, ROBERTSON — Structural & Civil Engineers

PROJECT: THE WORLD TRADE CENTER | TITLE: FL. 107 PH LOUVER SUPPORTS - ELEVATION WALL 200 | DATE: 4-1-70

VISIONS

6/15/70 R
2/5/71

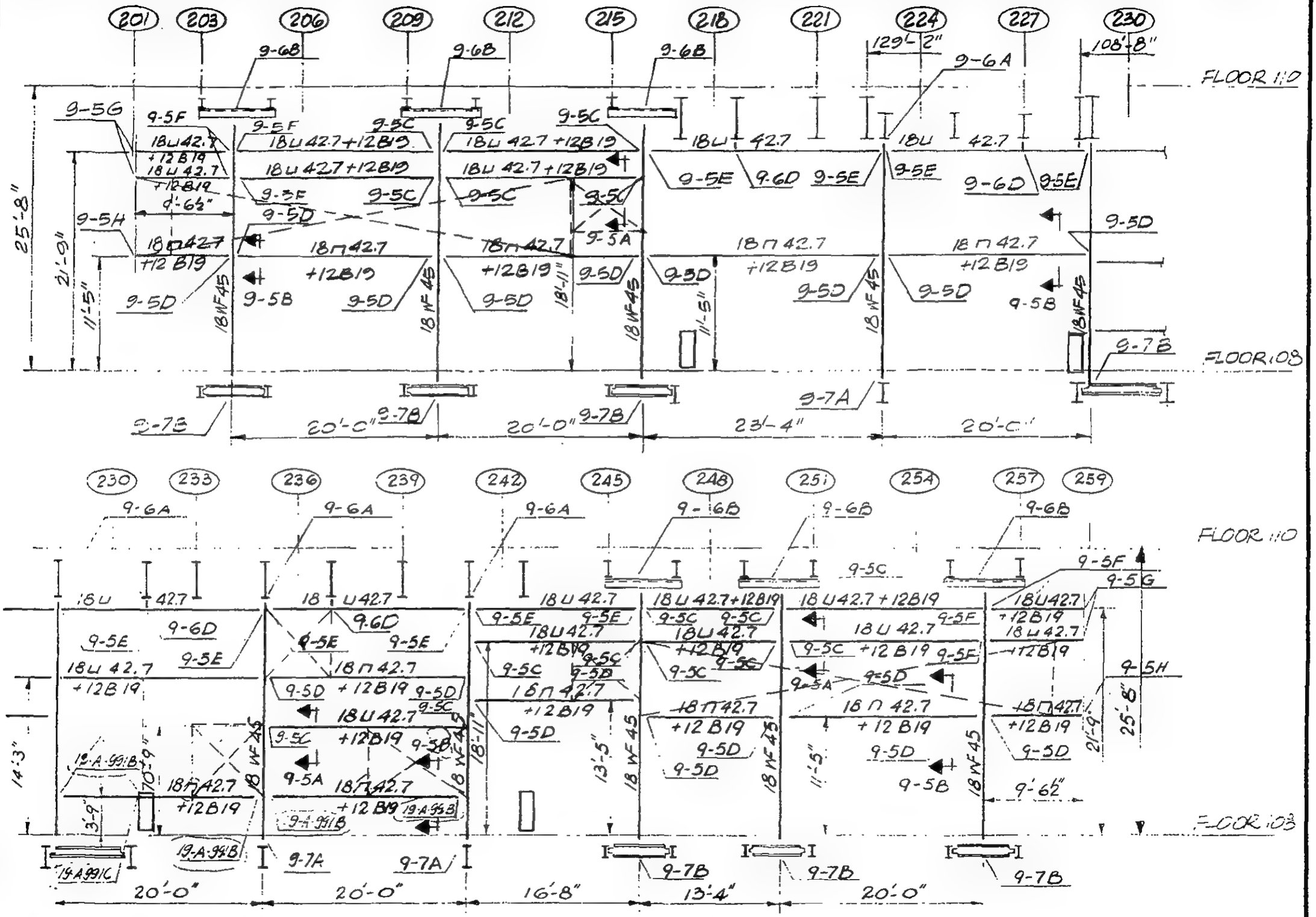

For Tower B see 9-B 9-C.2 & 2.3

DESIGNED

DRAWN
D. Huggins

REVIEWED

LICENSED PROFESSIONAL ENGINEER
LESLIE E. ROBERTSON
No 34360
UNIVERSITY OF THE STATE OF NEW YORK

9-A 9-2.1

SKILLING, HELLE, CHRISTIANSEN, ROBERTSON — Structural & Civil Engineers

PROJECT: INTERNATIONAL TRADE CENTER | TITLE: EL. 107 AH LOUVER SUPPORTS - ELEVATION WALL 200 | DATE: 2/6/71

EVISIONS

3-1-71

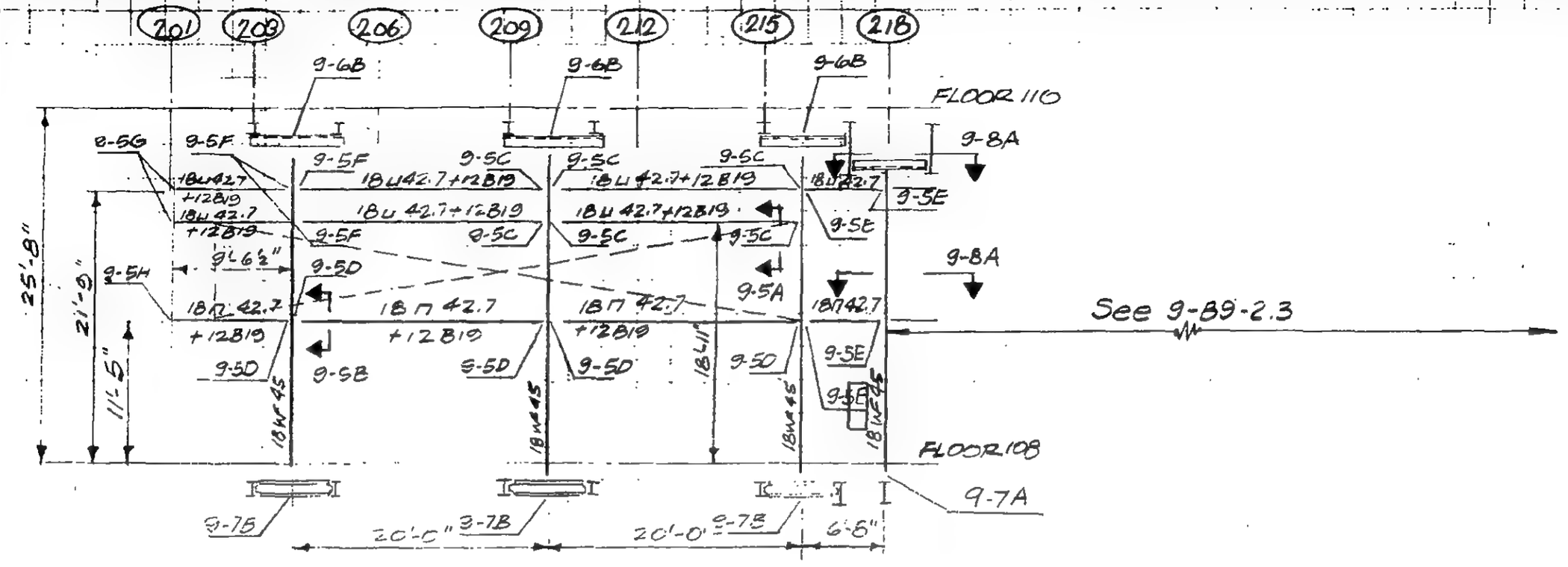

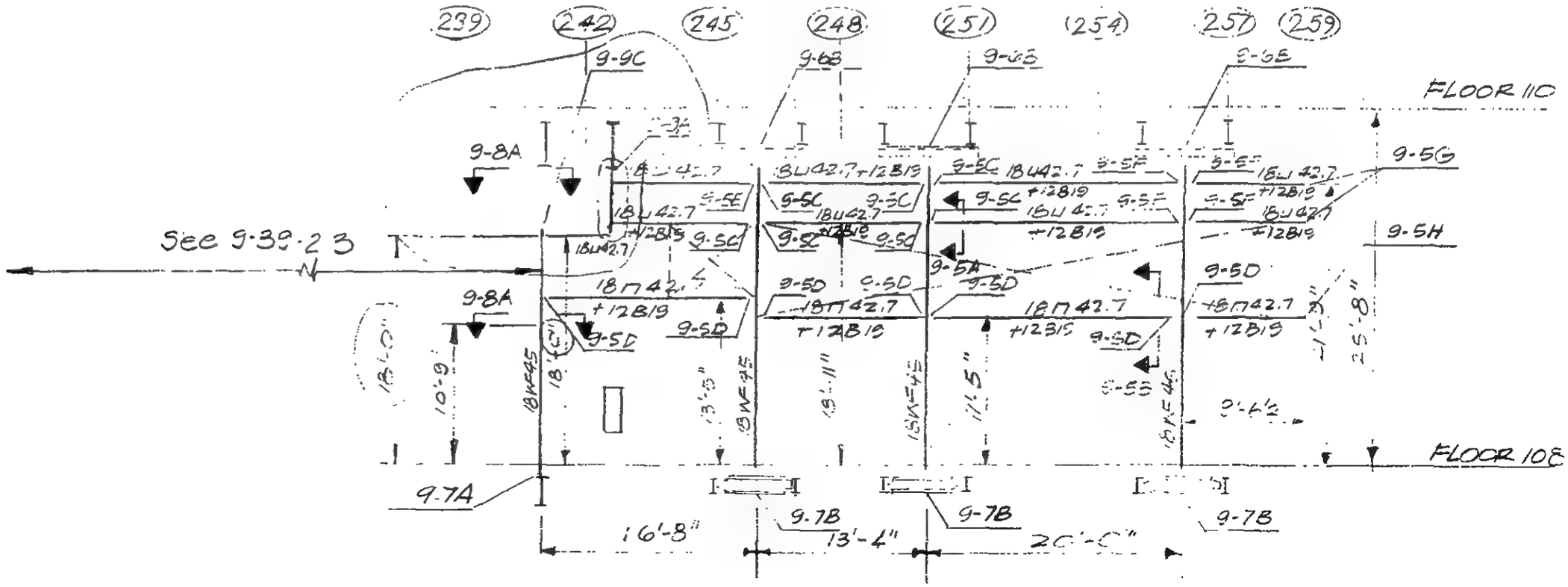

LICENSED PROFESSIONAL ENGINEER — LESLIE E. ROBERTSON — No 34360 — UNIVERSITY OF THE STATE OF NEW YORK

DESIGNED

DRAWN: D. Jones

REVIEWED

9-B9-2.2

SKILLING, HELLE, CHRISTIANSEN, ROBERTSON — Structural & Civil Engineers

PROJECT: THE WORLD TRADE CENTER

TITLE: FL 107 PH · LOUVER SUPPORTS - ELEVATION WALL 200

DATE: 2/5/71

REVISIONS

3-1-71

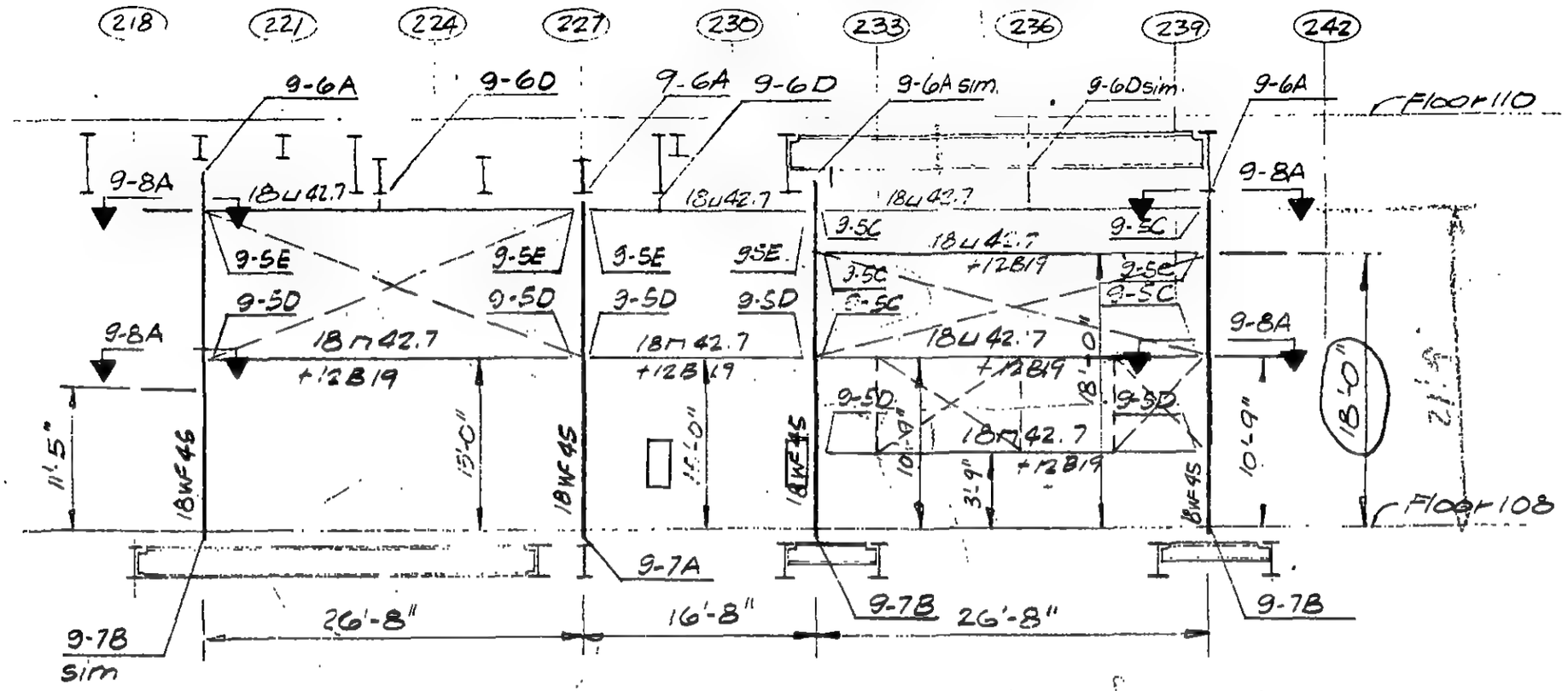

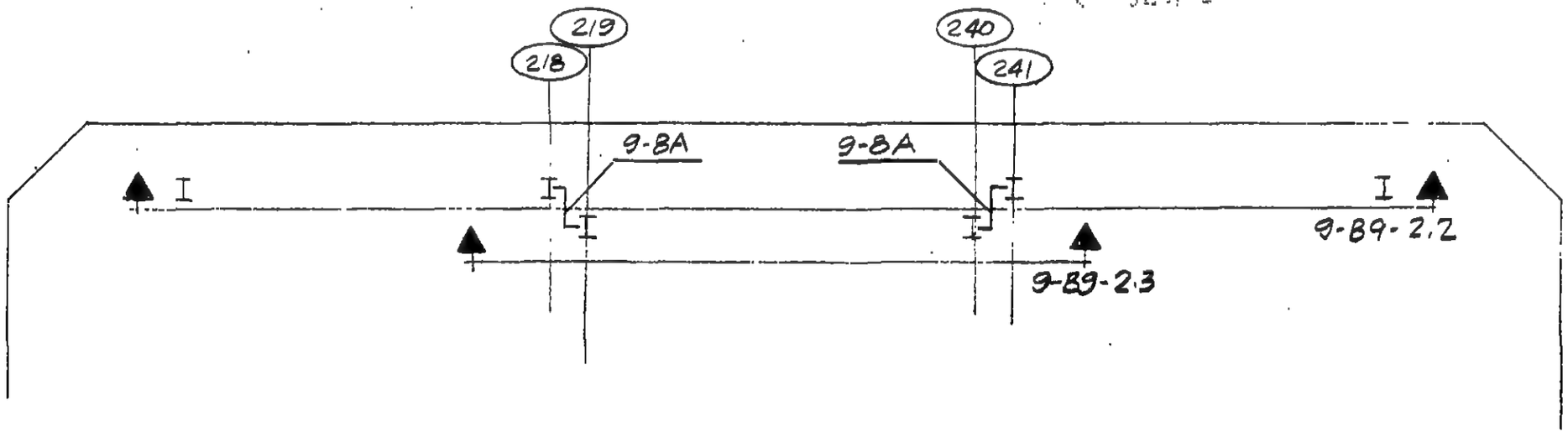

9-B9-2.3

PROFESSIONAL ENGINEER
LE E. ROBERTSON
NO 34360
OF THE STATE OF NEW YORK

ES

DRAWN
O'Zeki

REVIEWED

SKILLING, HELLE, CHRISTIANSEN, ROBERTSON — Structural & Civil Engineers

PROJECT: THE WORLD TRADE CENTER | TITLE: FL 107 PH - LOUVER SUPPORTS - ELEVATION WALL 200 | DATE: 2/5/71

VISIONS

3-1-71

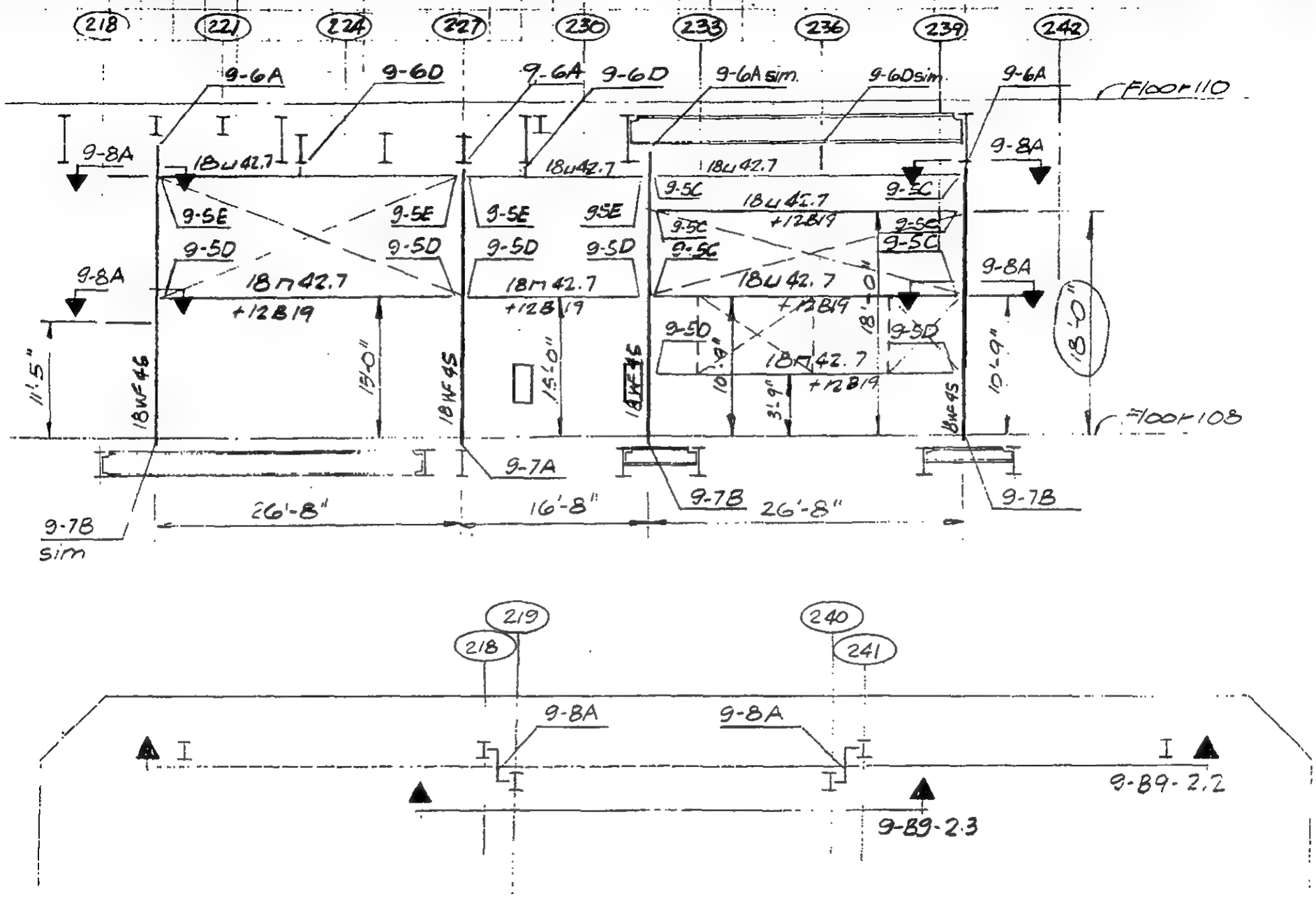

LICENSED PROFESSIONAL ENGINEER
LESLIE E. ROBERTSON
No 34360
UNIVERSITY OF THE STATE OF NEW YORK

DESIGNED

DRAWN R. Ozeki

REVIEWED

9-B9-2.3

SKILLING, HELLE, CHRISTIANSEN, ROBERTSON — Structural & Civil Engineers

PROJECT THE WORLD TRADE CENTER | TITLE FL. 107 PH-LOUVER SUPPORTS- ELEVATION WALL 300 | DATE 4-1-70

REVISIONS

6/15/70 R
2/5/71

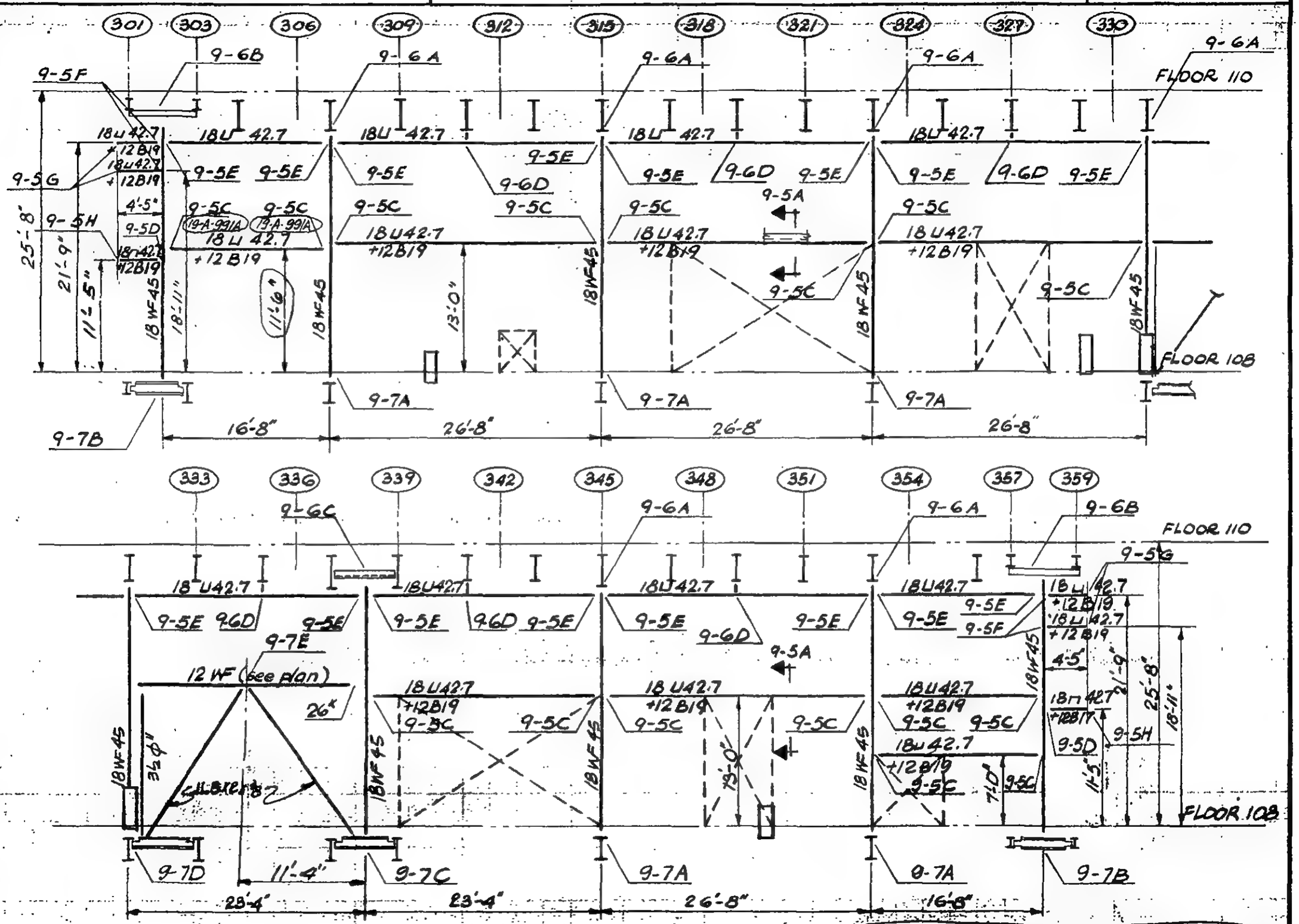

LICENSED PROFESSIONAL ENGINEER
LESLIE E. ROBERTSON
No. 34960
UNIVERSITY OF THE STATE OF NEW YORK

DESIGNED

DRAWN R. Huggins

REVIEWED

9-AB9-3

SKILLING, HELLE, CHRISTIANSEN, ROBERTSON — Structural & Civil Engineers

PROJECT THE WORLD TRADE CENTER | TITLE FL 107 PH-LOUVER SUPPORTS-ELEVATION WALL 400 | DATE 4-1-70

REVISIONS

6/15/70 R
2/5/71

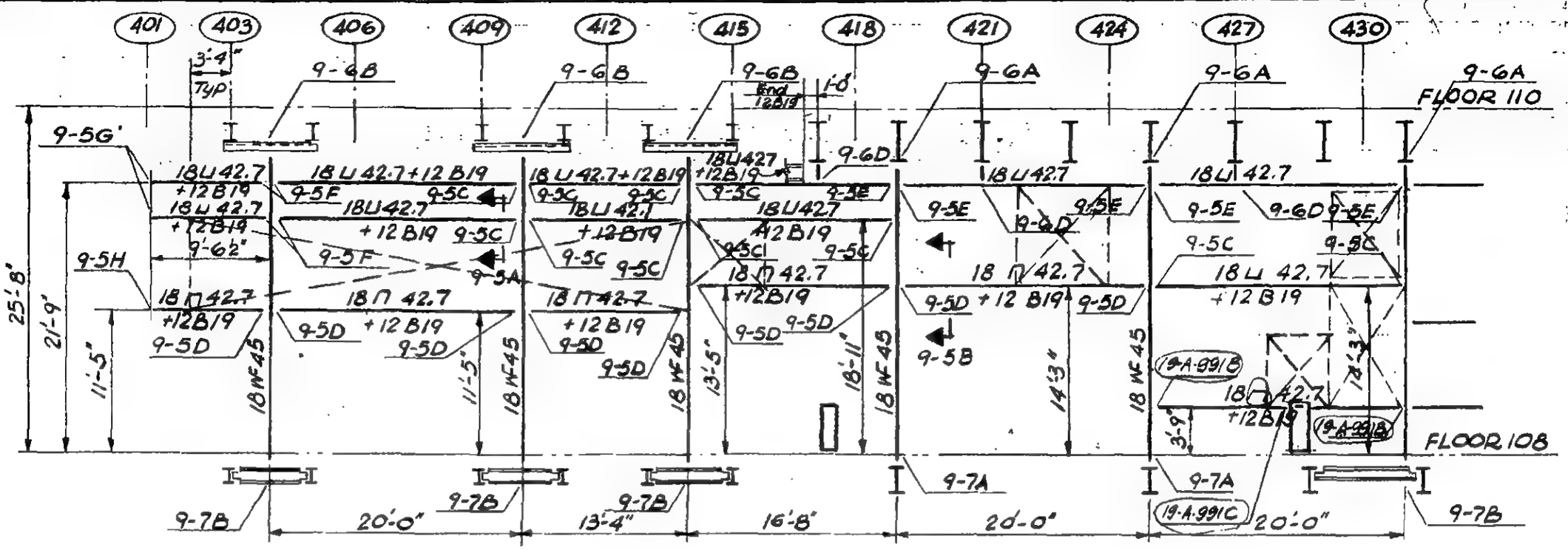

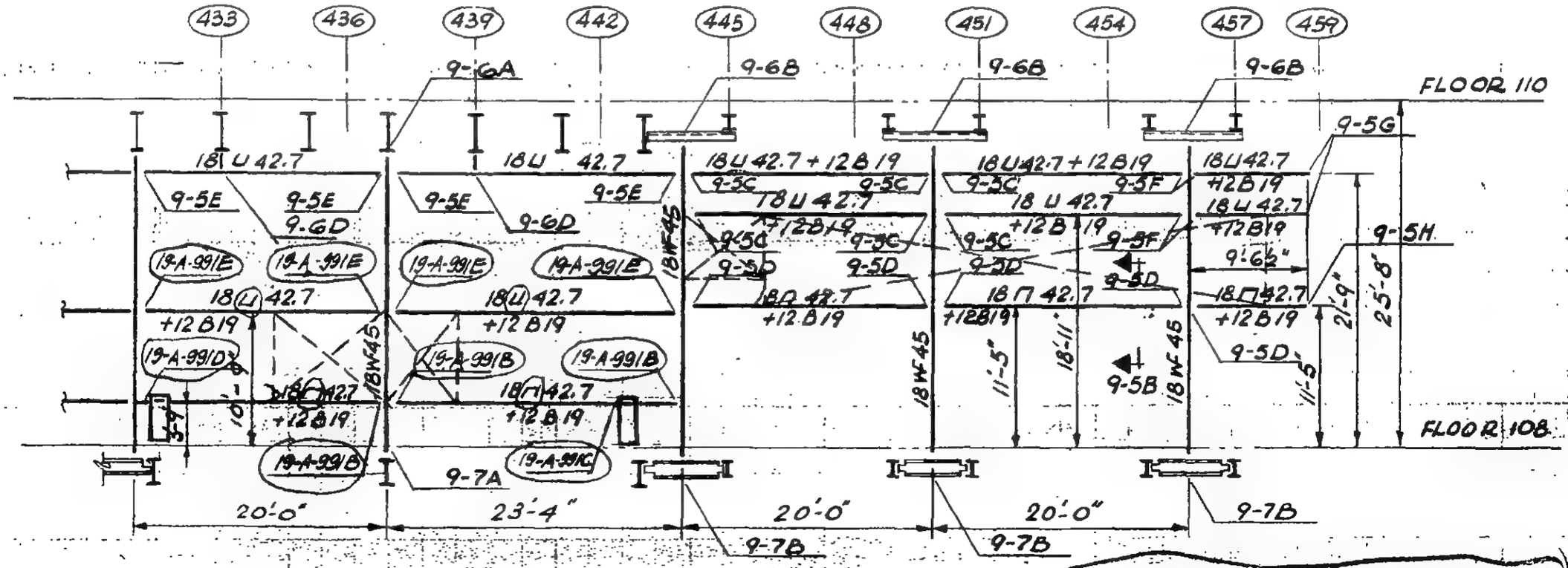

For Tower B, see 9-B9-4.2 & 4.3

LICENSED PROFESSIONAL ENGINEER — LESLIE E. ROBERTSON — UNIVERSITY OF THE STATE OF NEW YORK — NO. 34960

DESIGNED

DRAWN D. Huggins

REVIEWED

9-A 9-4.1

SKILLING, HELLE, CHRISTIANSEN, ROBERTSON — Structural & Civil Engineers

PROJECT: THE WORLD TRADE CENTER

TITLE: FL 107 PH - LOUVER SUPPORTS - ELEVATION WALL 400

DATE: 2/6/71

REVISIONS

3-1-71

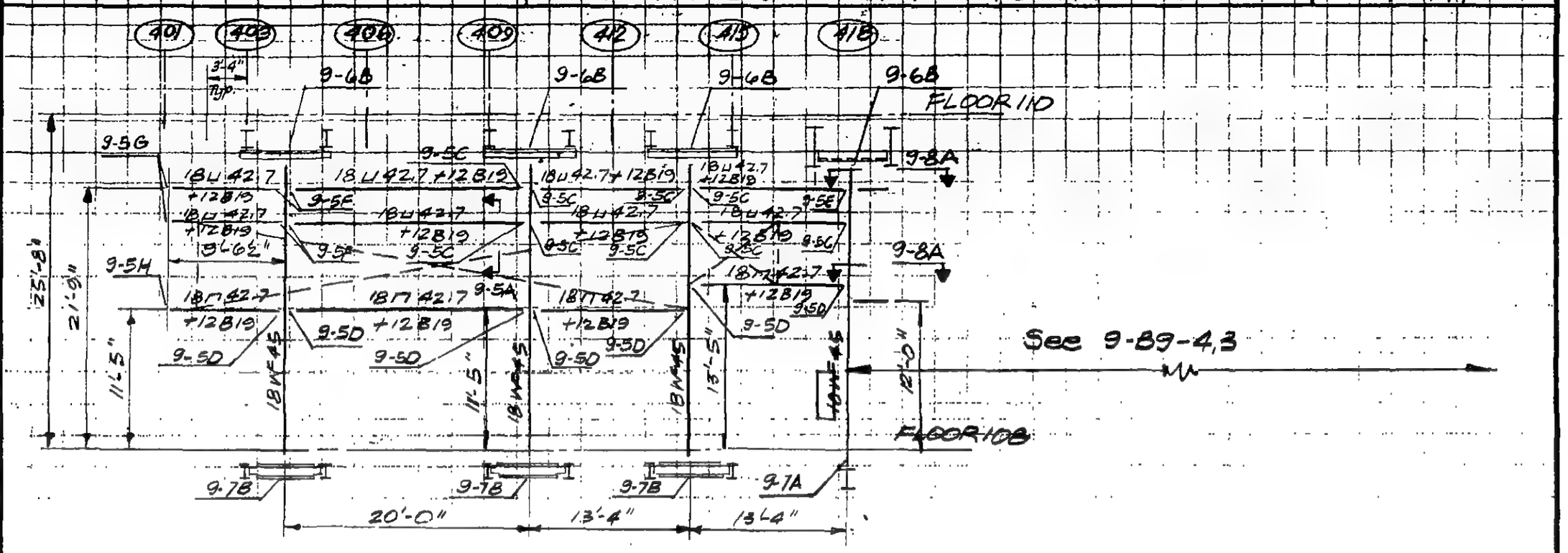

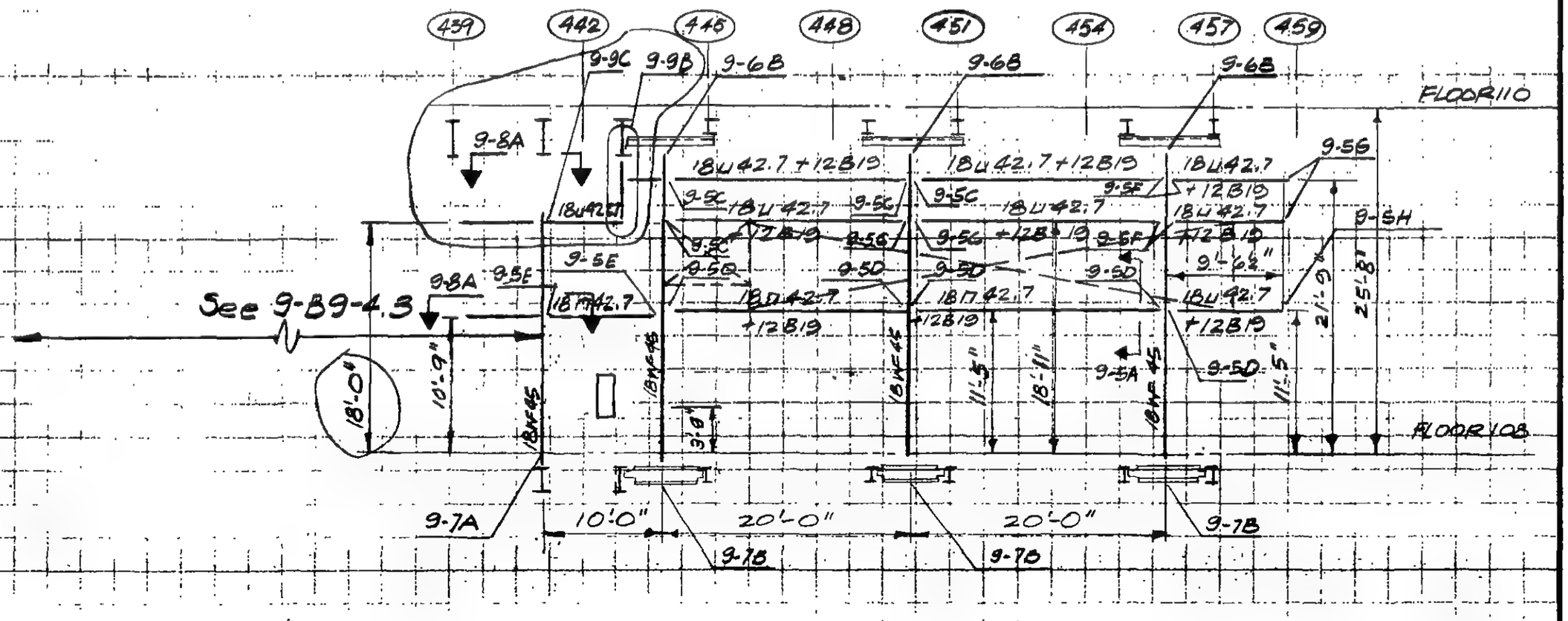

LICENSED PROFESSIONAL ENGINEER — LESLIE E. ROBERTSON — NO. 34360 — UNIVERSITY OF THE STATE OF NEW YORK

DESIGNED

DRAWN: A. Jones

REVIEWED

9-89-4.2

SKILLING, HELLE, CHRISTIANSEN, ROBERTSON — Structural & Civil Engineers

PROJECT: THE WORLD TRADE CENTER | TITLE: EL. 107 PH - LOWER SUPPORTS - ELEVATION WALL 400 | DATE: 2/15/71

REVISIONS
3-1-71

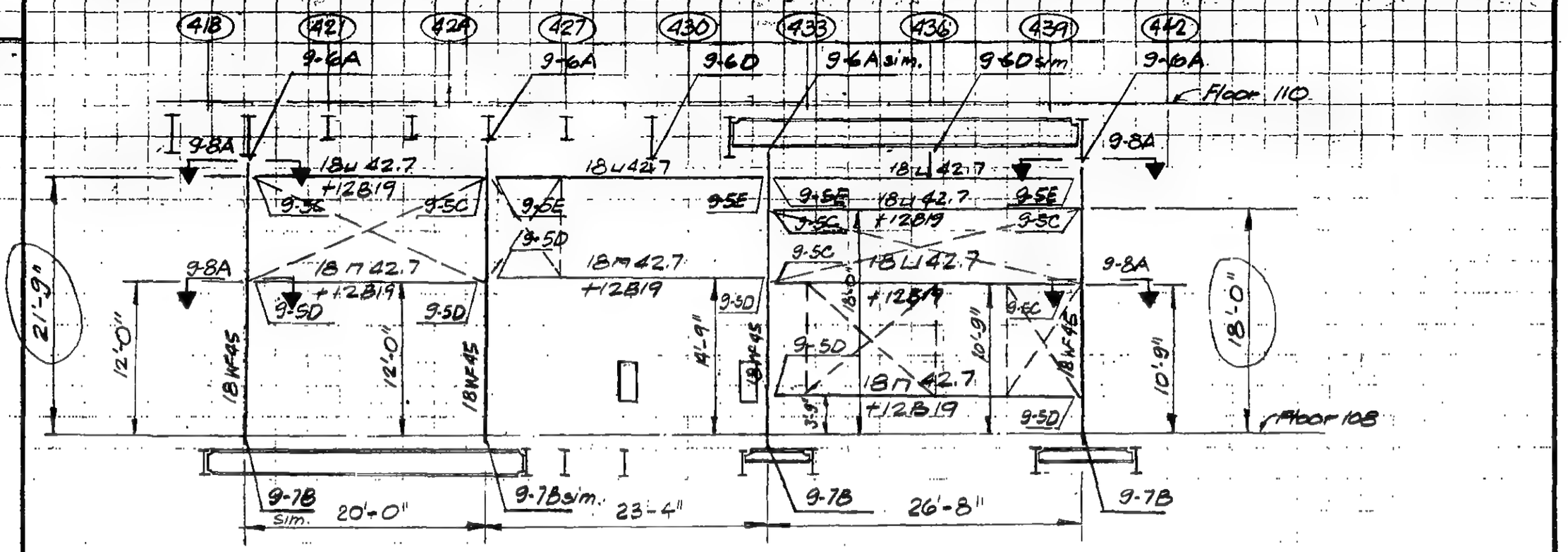

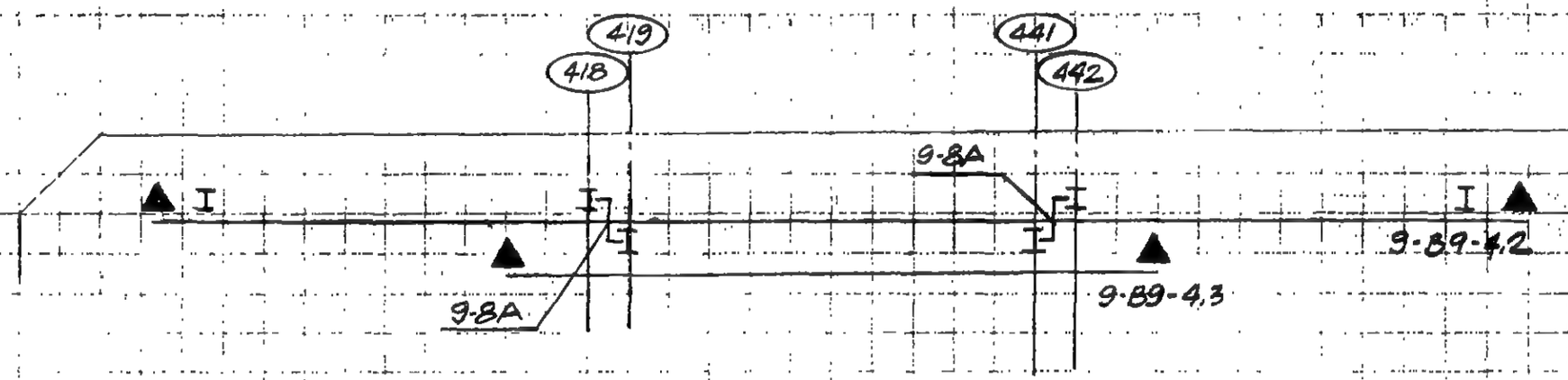

LICENSED PROFESSIONAL ENGINEER
LESLIE E. ROBERTSON
No 34360
UNIVERSITY OF THE STATE OF NEW YORK

DESIGNED

DRAWN
R. Ozaki

REVIEWED

9-89-4.3

SKILLING, HELLE, CHRISTIANSEN, ROBERTSON — Structural & Civil Engineers

PROJECT THE WORLD TRADE CENTER | TITLE FL.107-PH LOUVER WALL SUPPORTS-DETAILS | DATE 4-1-70

REVISIONS

6/15/70 R
2/5/71

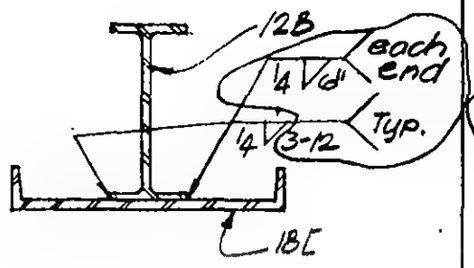

Detail 9-5A

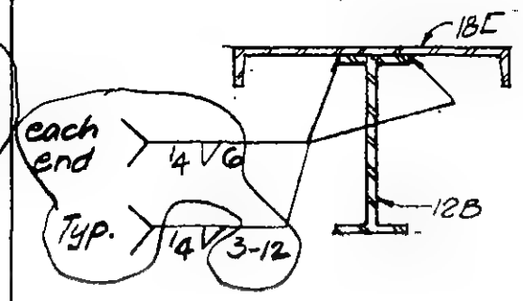

Detail 9-5B

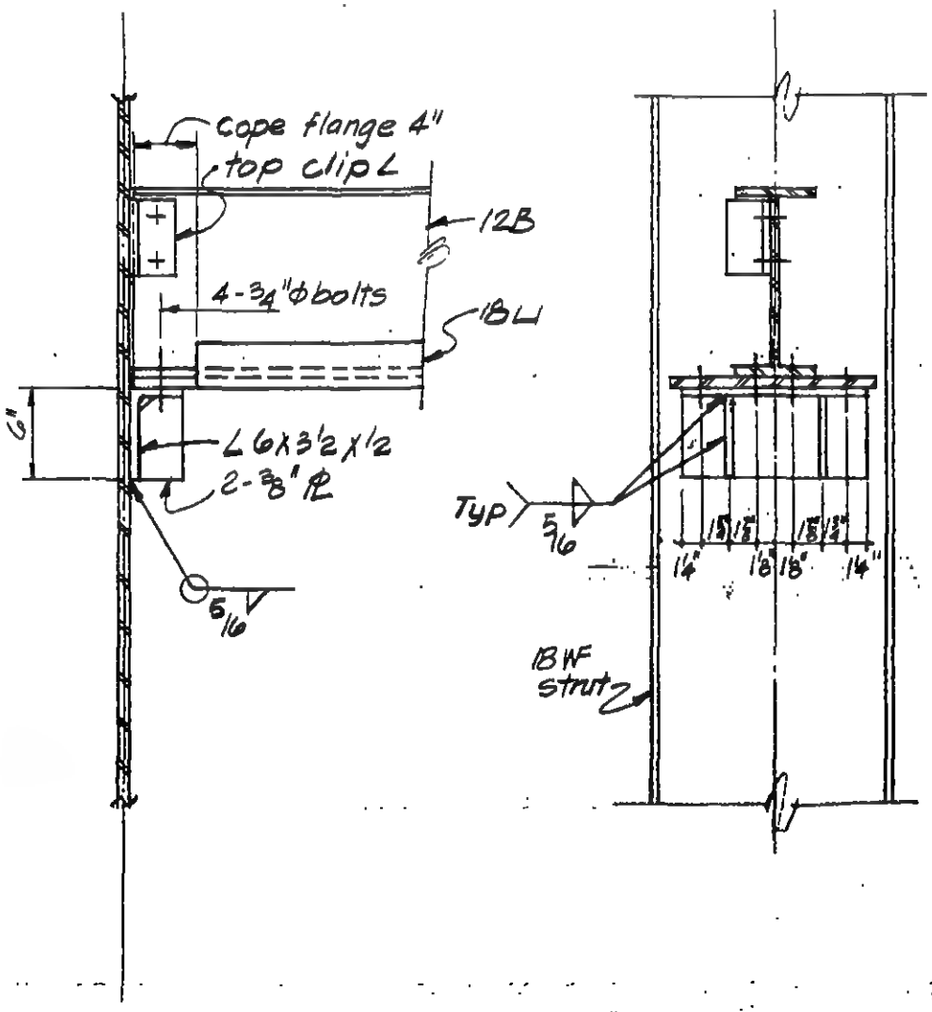

Detail 9-5C

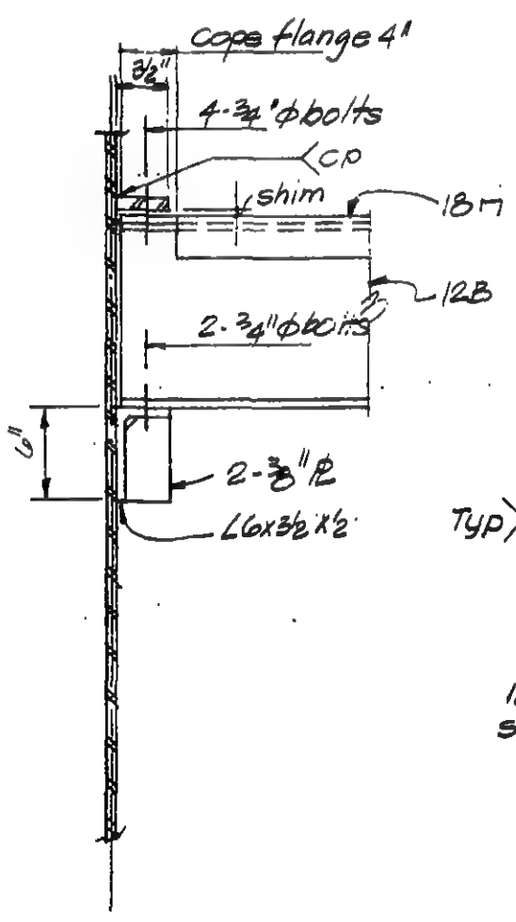

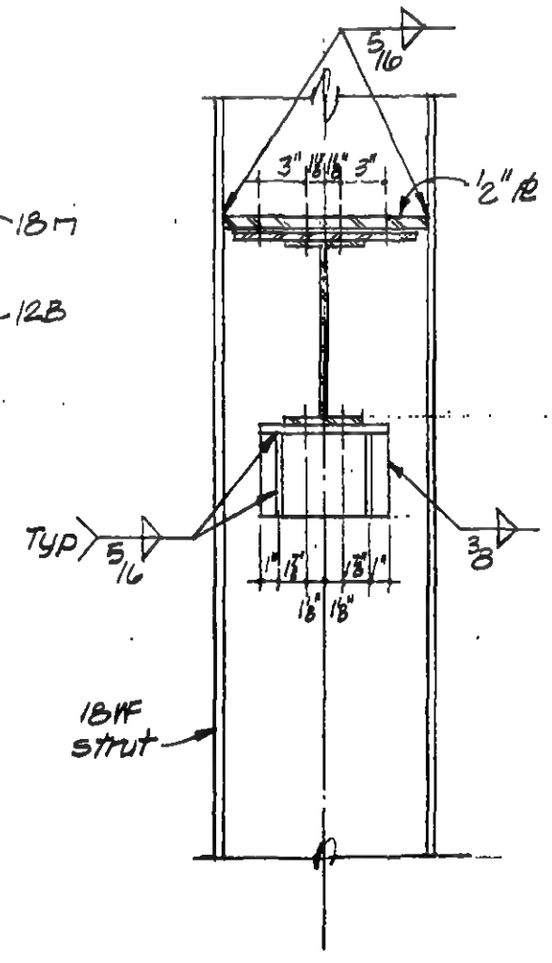

Detail 9-5D

LICENSED PROFESSIONAL ENGINEER
LESLIE E. ROBERTSON
No. 34360
UNIVERSITY OF THE STATE OF NEW YORK

DESIGNED

DRAWN
R. Ozeki

REVIEWED

9-AB9-5.1

SKILLING, HELLE, CHRISTIANSEN, ROBERTSON — Structural & Civil Engineers

PROJECT THE WORLD TRADE CENTER | TITLE FL.107-PH LOUVER WALL SUPPORTS- DETAILS | DATE 4-1-70

REVISIONS

6/15/70 R
2/5/71

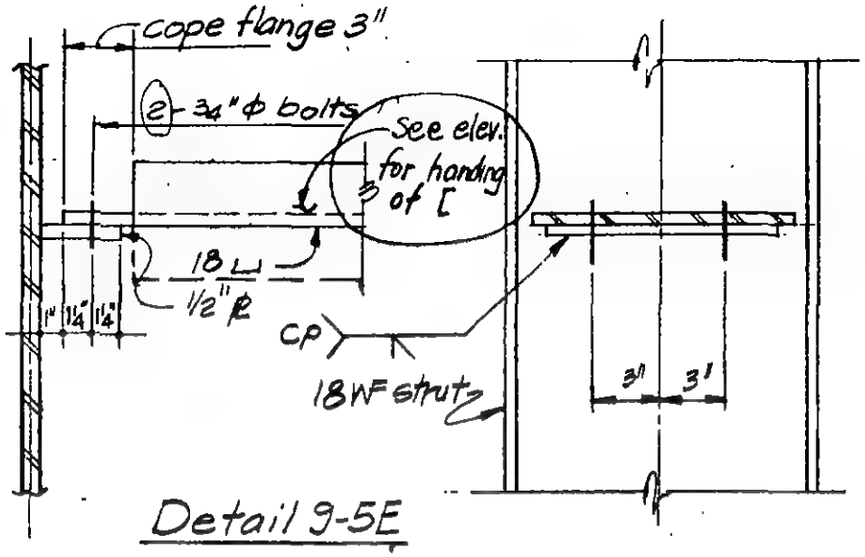

Detail 9-5E

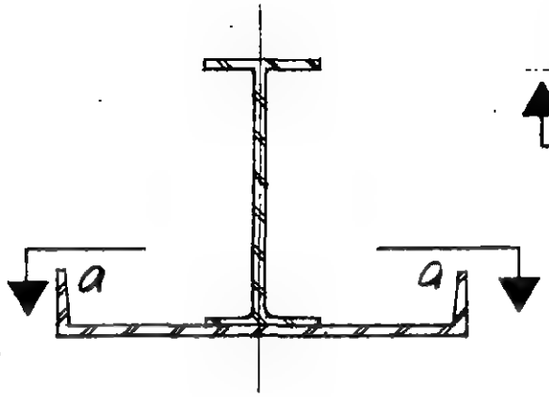

Detail 9-5G

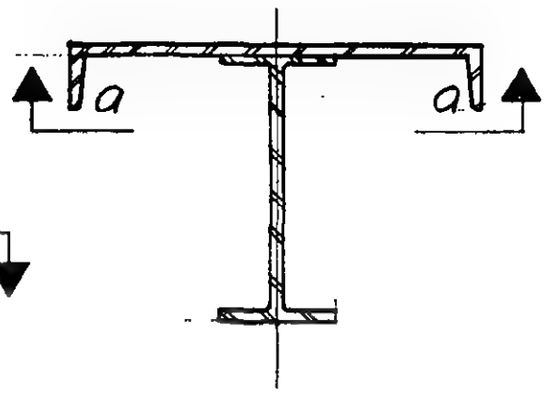

Detail 9-5H

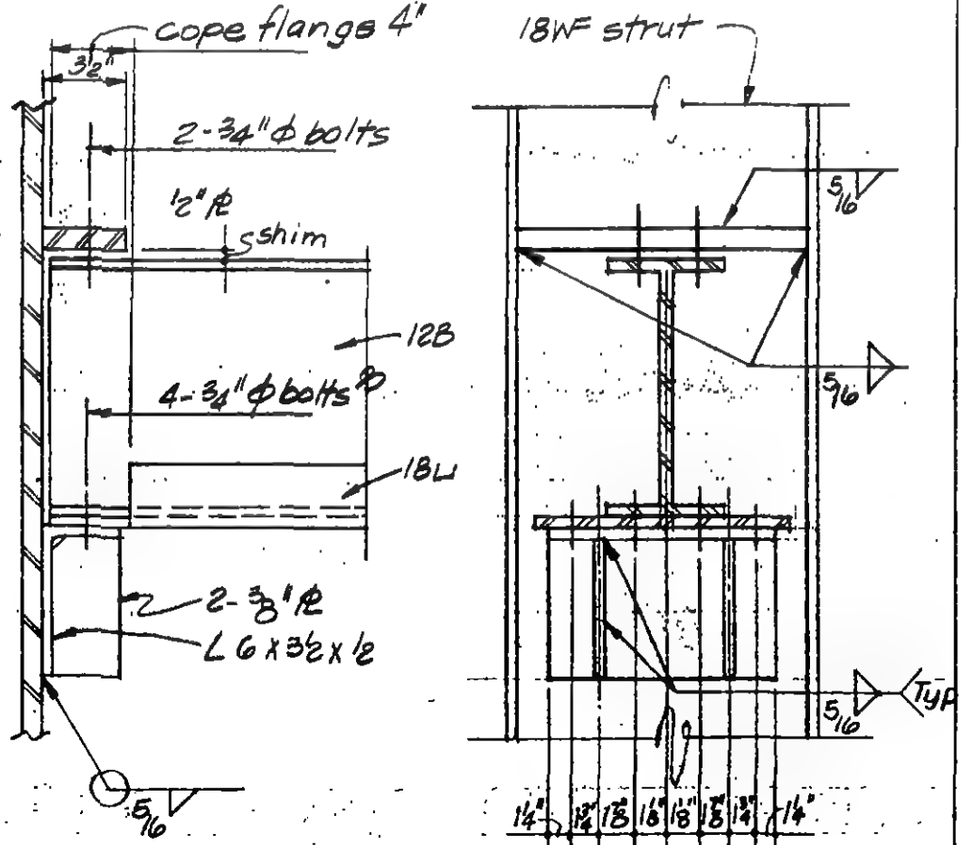

Detail 9-5F

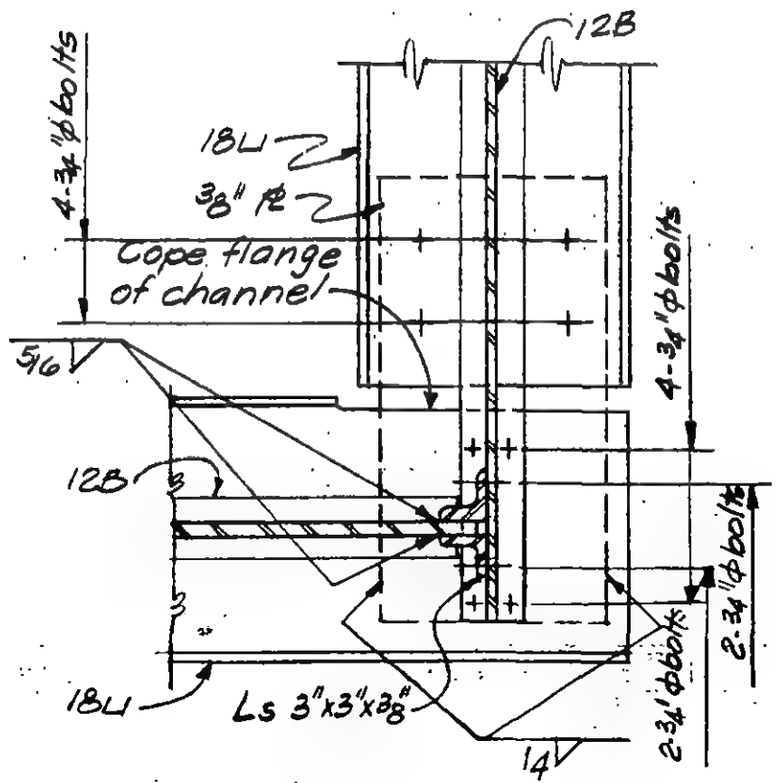

Section a-a

LICENSED PROFESSIONAL ENGINEER
LESLIE E. ROBERTSON
NO 34360
UNIVERSITY OF THE STATE OF NEW YORK

DESIGNED

DRAWN P. Ozeki

REVIEWED

9-AB9-5.2

SKILLING, HELLE, CHRISTIANSEN, ROBERTSON — Structural & Civil Engineers

PROJECT THE WORLD TRADE CENTER | TITLE FL. 107-PH LOUVER WALL SUPPORTS - DETAILS | DATE 4-1-70

REVISIONS

6/15/70 R

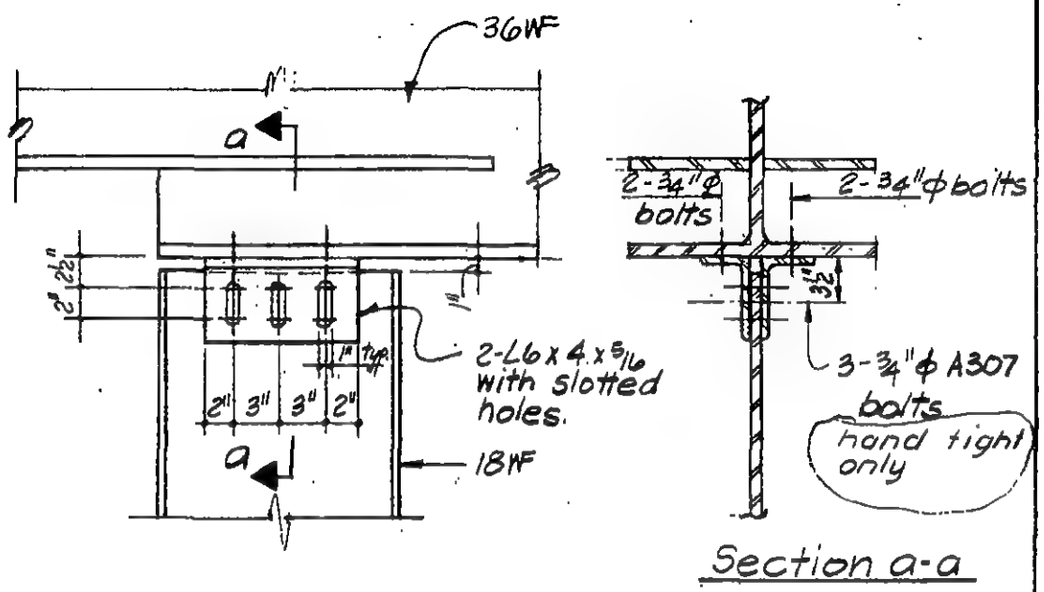

Detail 9-6A

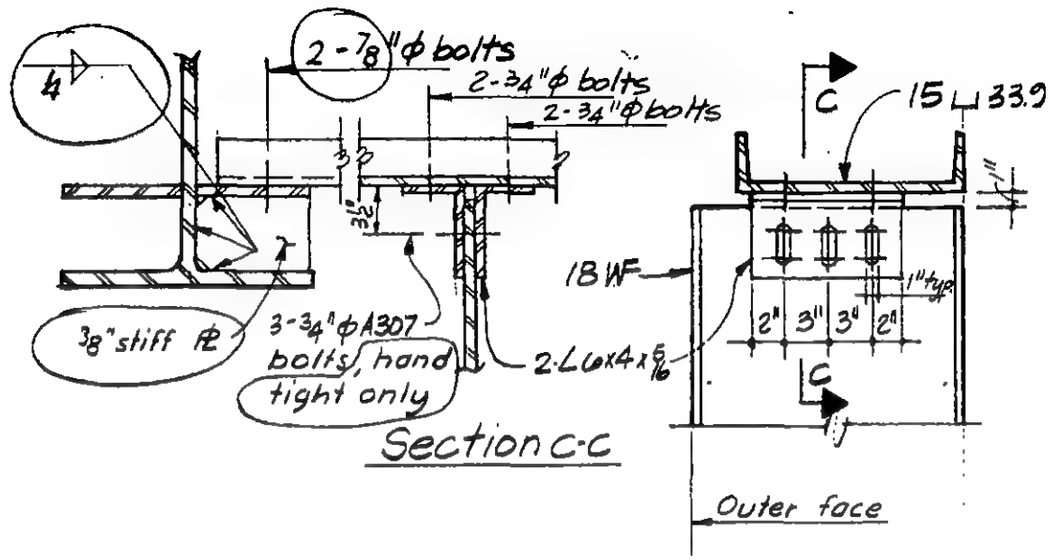

Detail 9-6C

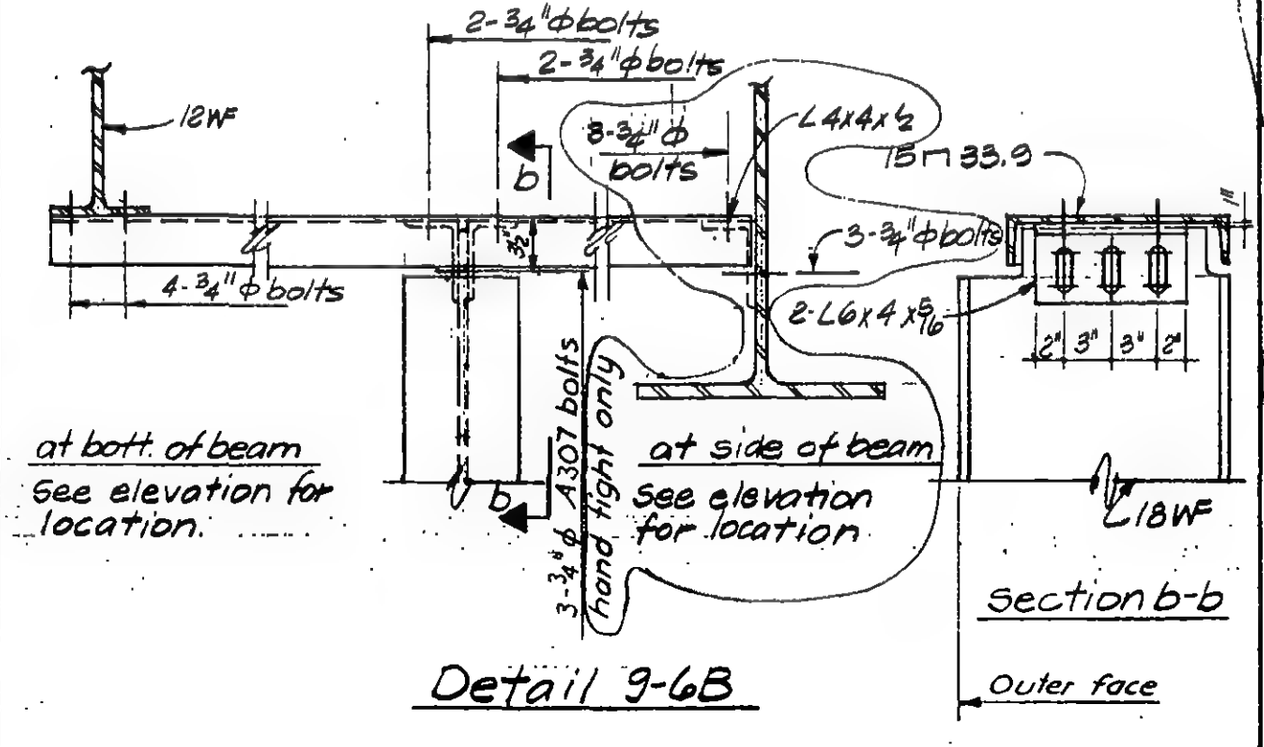

Detail 9-6B

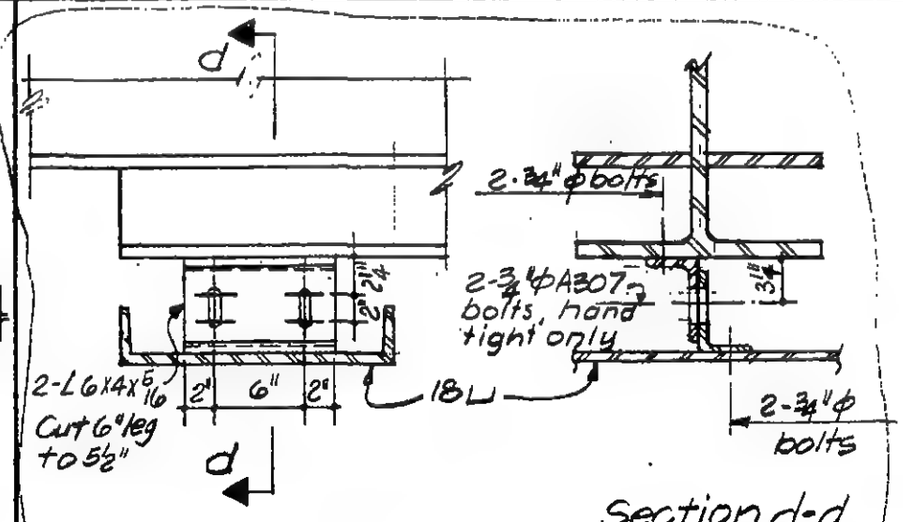

Detail 9-6D

LICENSED PROFESSIONAL ENGINEER — LESLIE E. ROBERTSON — No 34360 — UNIVERSITY OF THE STATE OF NEW YORK

DESIGNED

DRAWN P. Ozaki

REVIEWED

9-AB9-6

SKILLING, HELLE, CHRISTIANSEN, ROBERTSON — Structural & Civil Engineers

PROJECT THE WORLD TRADE CENTER | TITLE FL. 107-PH LOUVER WALL SUPPORTS - DETAILS | DATE 4-1-70

REVISIONS

6/15/70 R
7/8/70

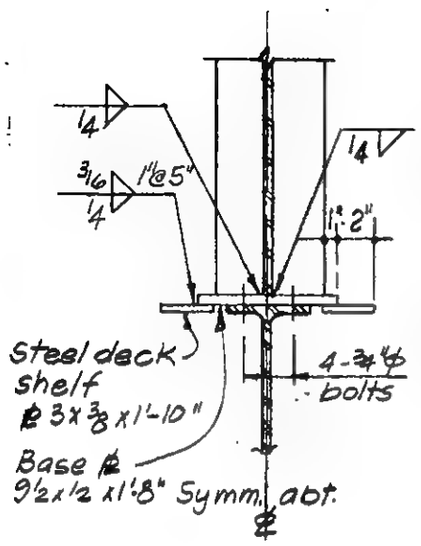

Detail 9-7A

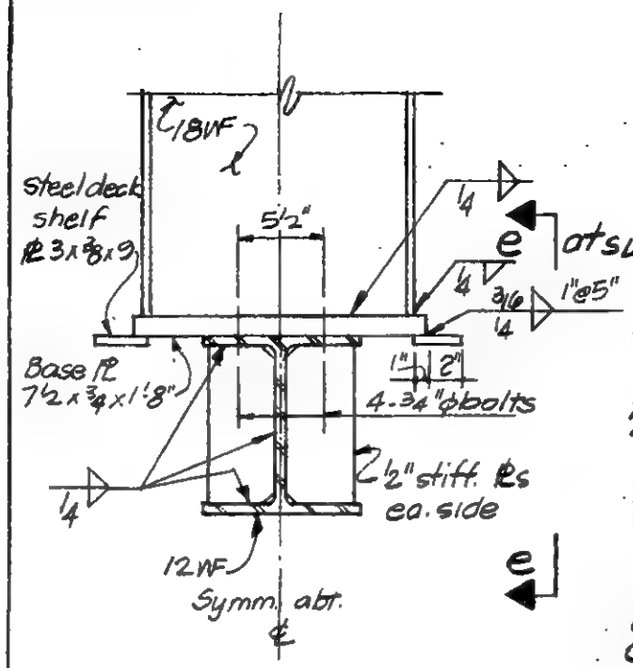

Detail 9-7B

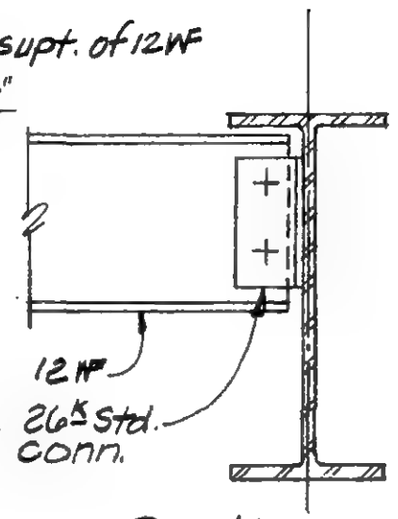

Section e-e

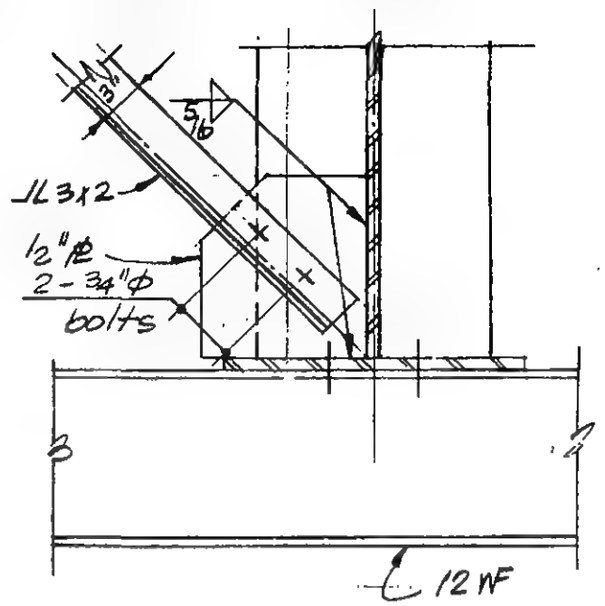

Detail 9-7C
For information not shown see 9-7B

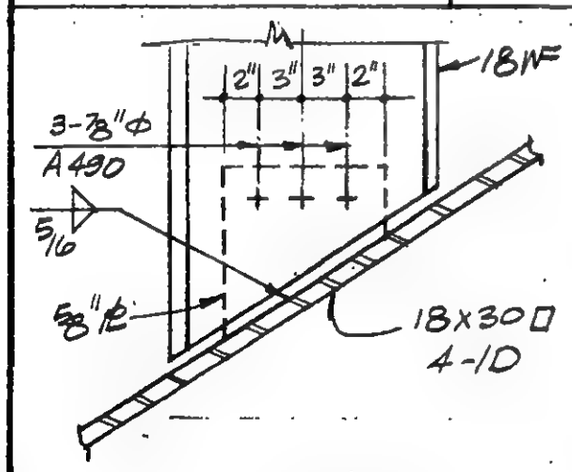

Section g-g

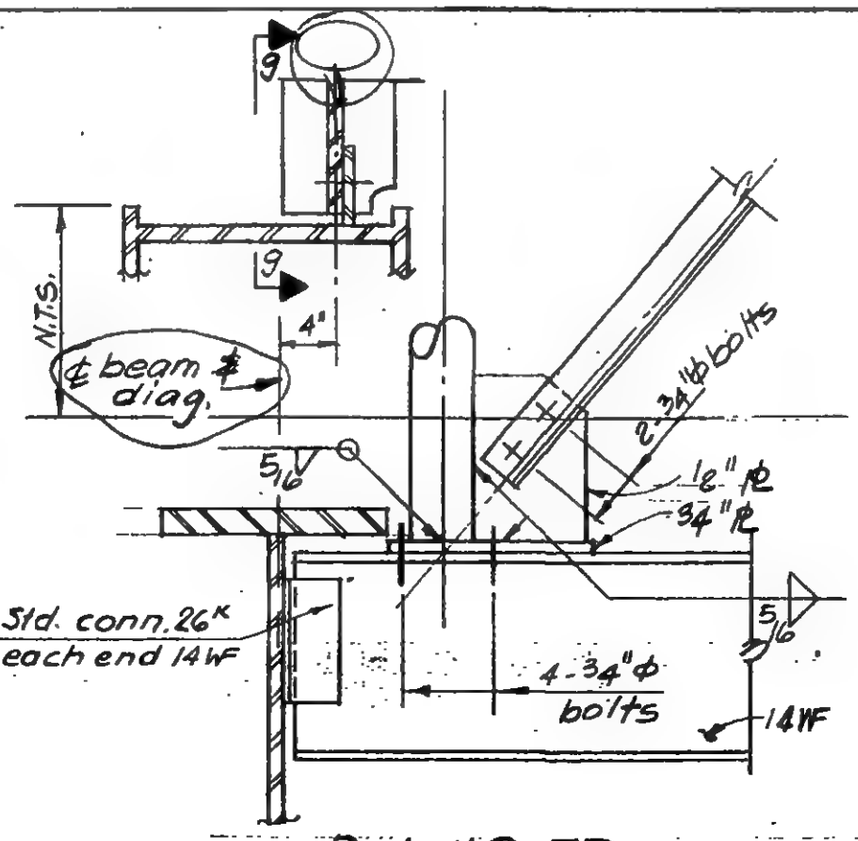

Detail 9-7D

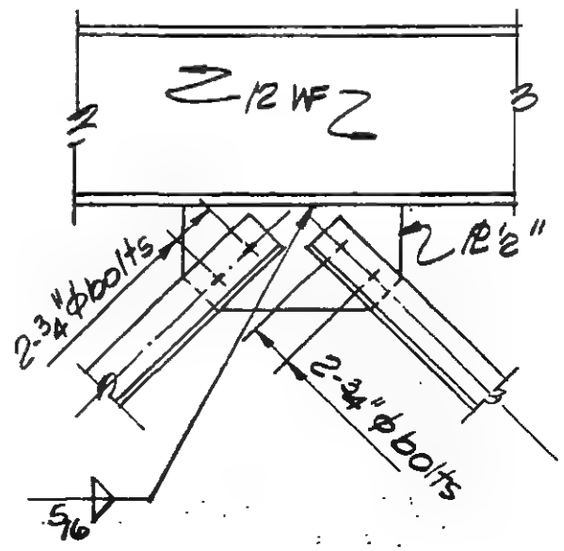

Detail 9-7E

LICENSED PROFESSIONAL ENGINEER
LESLIE E. ROBERTSON
No. 34360
UNIVERSITY OF THE STATE OF NEW YORK

DESIGNED

DRAWN P. Ozeki

REVIEWED

9-AB9-7

SKILLING, HELLE, CHRISTIANSEN, ROBERTSON — Structural & Civil Engineers

PROJECT: THE WORLD TRADE CENTER | TITLE: FL. 107-PH LOUVER WALL SUPPORTS - DETAILS | DATE: 2/5/71

REVISIONS

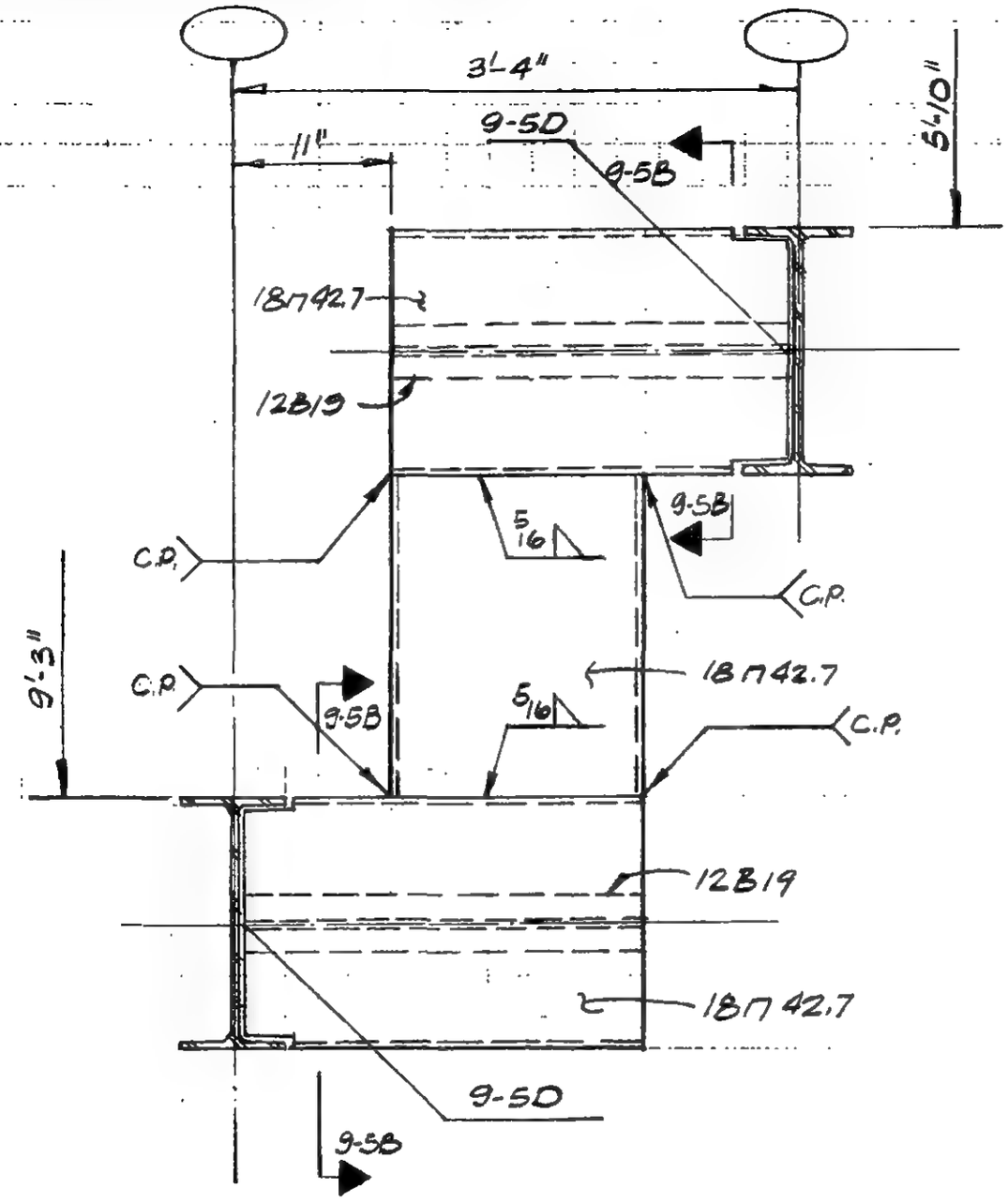

LICENSED PROFESSIONAL ENGINEER
LESLIE E. ROBERTSON
No 34360
UNIVERSITY OF THE STATE OF NEW YORK

DESIGNED

DRAWN P. Orelli

REVIEWED

9-89-8

SKILLING, HELLE, CHRISTIANSEN, ROBERTSON — Structural & Civil Engineers

PROJECT: THE WORLD TRADE CENTER | TITLE: FL. 107 PH LOUVER WALL SUPPORTS - DETAILS | DATE: 3-1-71

REVISIONS

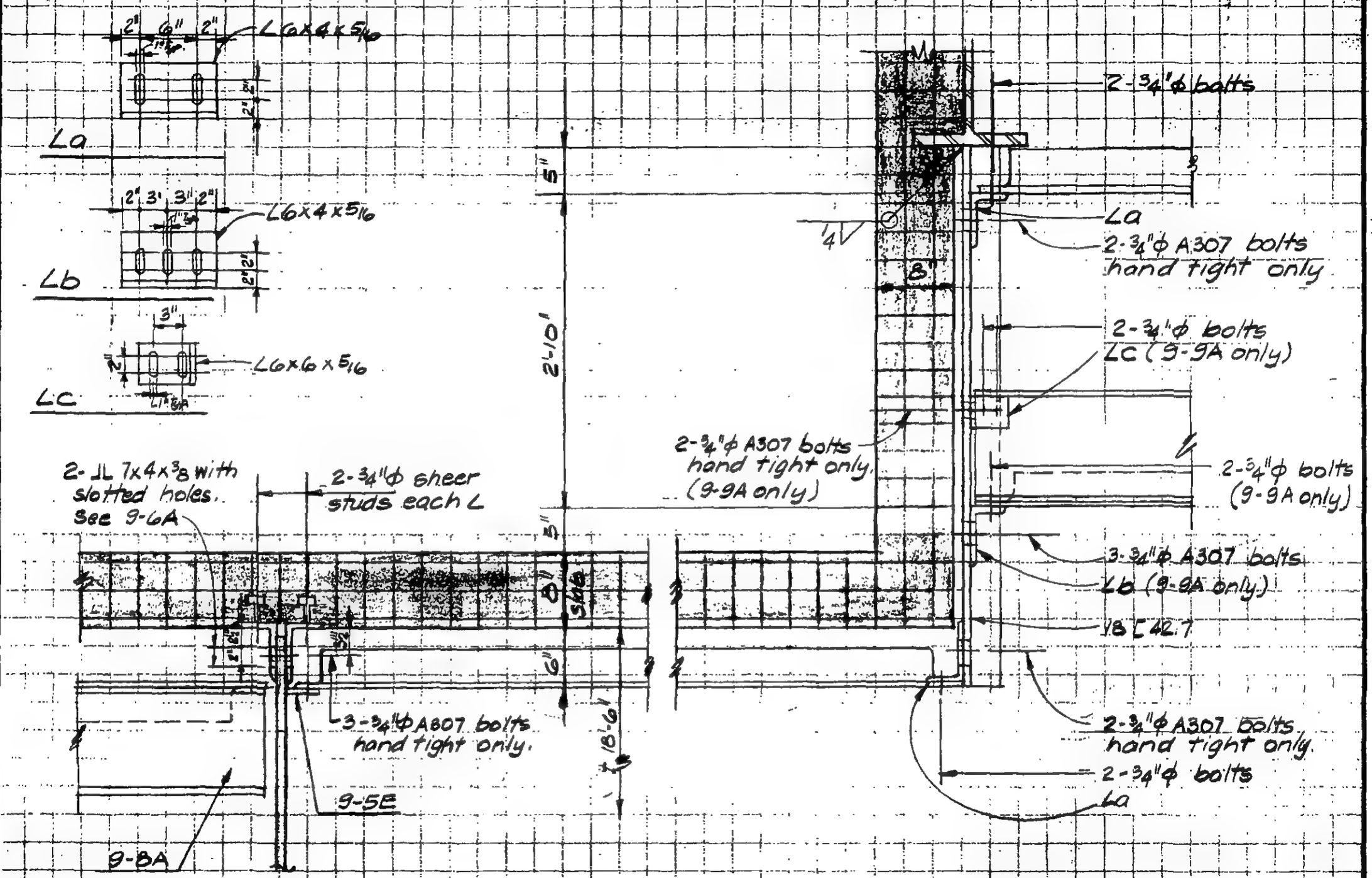

Detail 9-9C

Detail 9-9A

Detail 9-9B as noted

LICENSED PROFESSIONAL ENGINEER — LESLIE E. ROBERTSON — No. 34360 — UNIVERSITY OF THE STATE OF NEW YORK

DESIGNED: WAB

DRAWN: P. Ocelei

REVIEWED:

9-89-9

SKILLING, HELLE, CHRISTIANSEN, ROBERTSON — Structural & Civil Engineers

PROJECT: THE WORLD TRADE CENTER | TITLE: FL-107- PH STRAP ANCHOR GENERAL NOTES | DATE: 9-15-70

REVISIONS

1. Straps and back up material to be ASTM A36.
2. All welding to be with E70xx low hydrogen electrodes.
3. Back up material for complete penetration welding not to exceed 1"x¼".
4. Stud lengths, see Table A.

Table A

Stud Size	Stud length	Shop Dwg. Stud Designation
½	2"	R 420
⅝	2½"	R 524
¾	3"	R 630
⅞	3½"	R 734

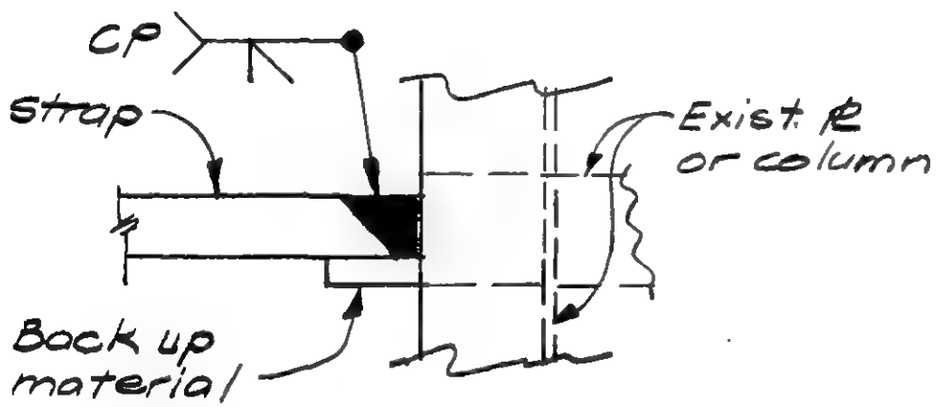

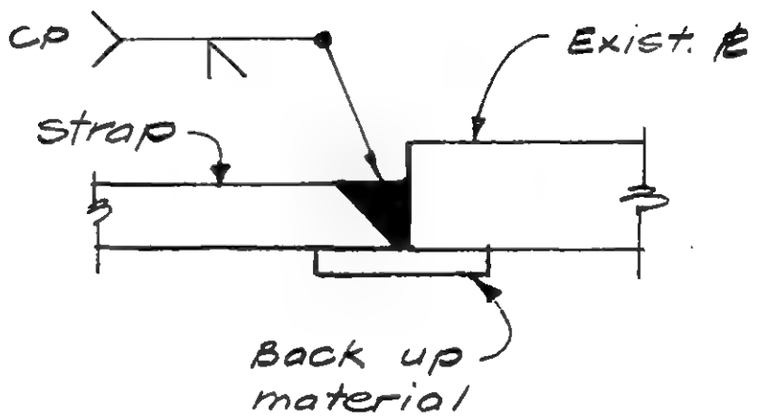

Typical Back up Material Detail

LICENSED PROFESSIONAL ENGINEER — LESLIE E. ROBERTSON — No 34360 — UNIVERSITY OF THE STATE OF NEW YORK

DESIGNED

DRAWN A Orelli

REVIEWED

9-AB10-1

SKILLING, HELLE, CHRISTIANSEN, ROBERTSON — Structural & Civil Engineers

PROJECT THE WORLD TRADE CENTER | TITLE FL 107 - PH STRAP ANCHOR DETAILS - FL 107 | DATE 9-15-70

REVISIONS

12/14/70

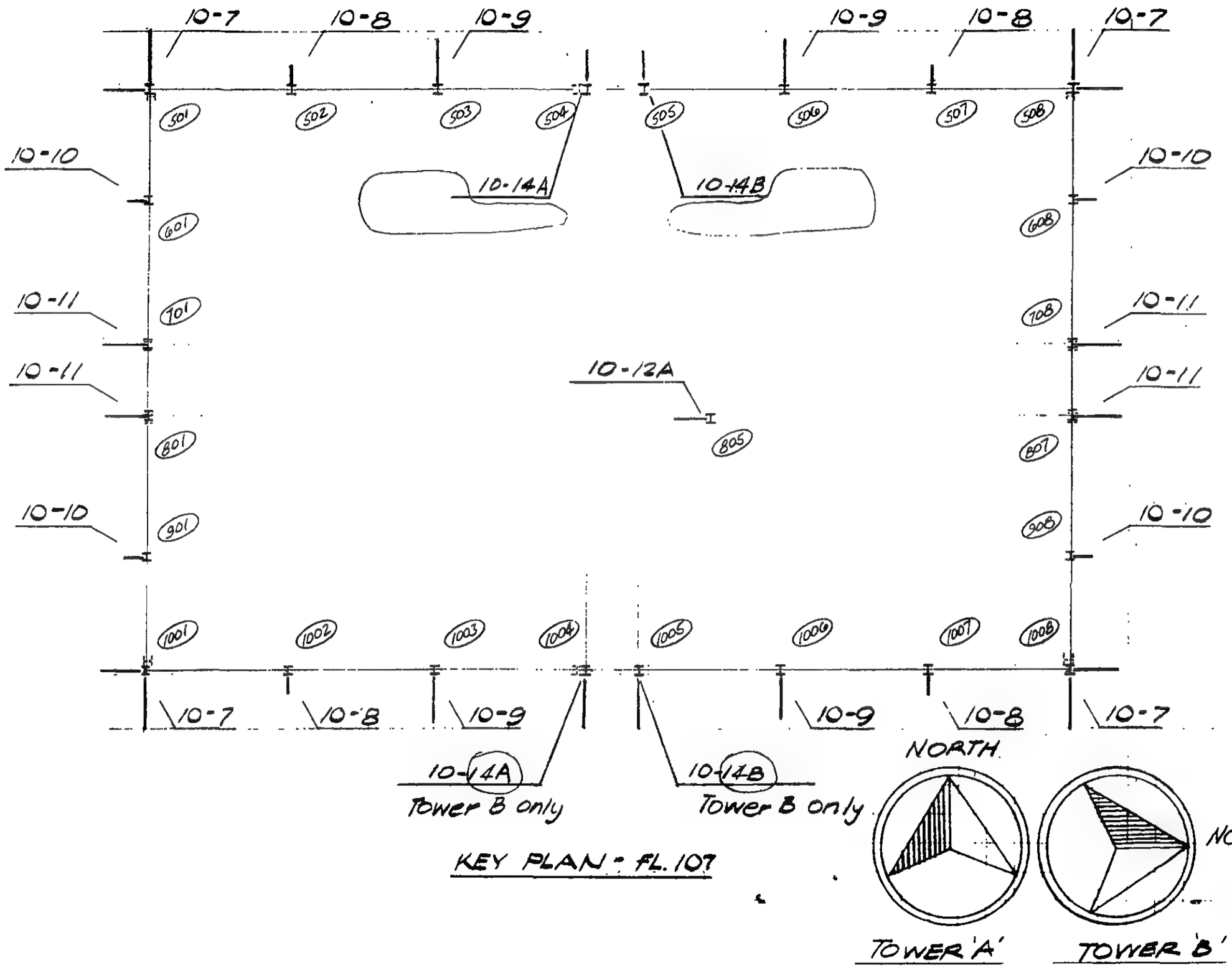

KEY PLAN - FL. 107

LICENSED PROFESSIONAL ENGINEER — LESLIE E. ROBERTSON — No. 34360 — UNIVERSITY OF THE STATE OF NEW YORK

DESIGNED

DRAWN

REVIEWED

9-AB10-2

SKILLING, HELLE, CHRISTIANSEN, ROBERTSON — Structural & Civil Engineers

PROJECT: THE WORLD TRADE CENTER | TITLE: FL 107 - PH STRAP ANCHOR DETAILS - FL. 108 | DATE: 9-15-70

REVISIONS

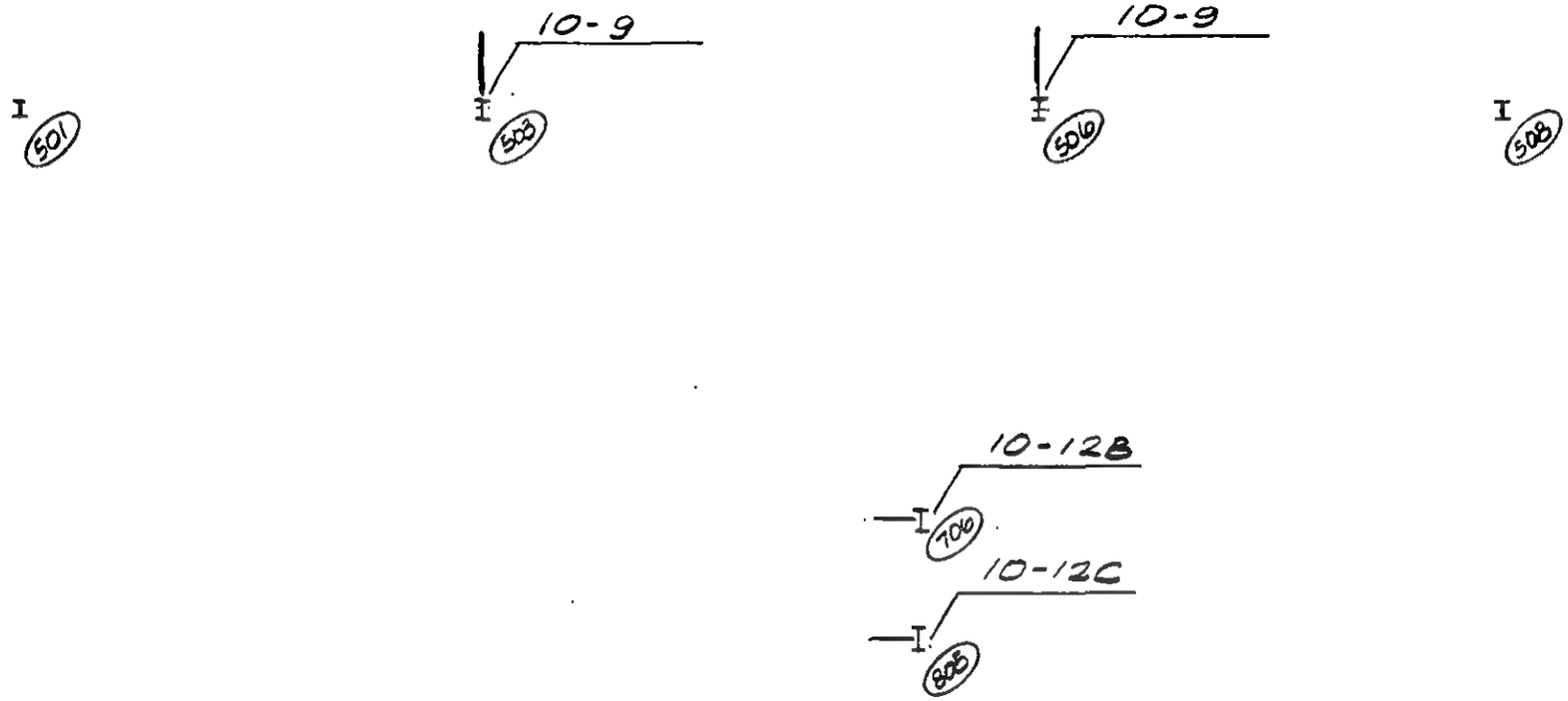

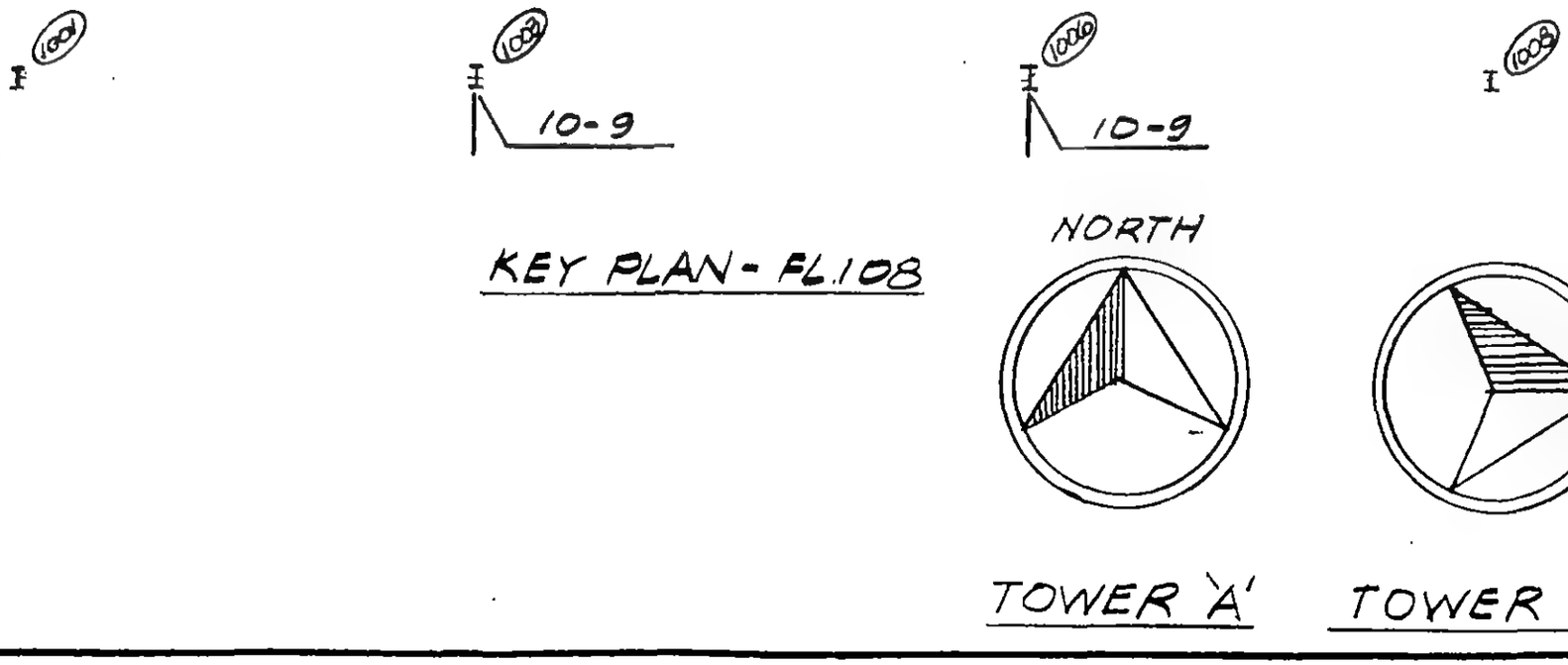

KEY PLAN - FL.108

TOWER 'A'

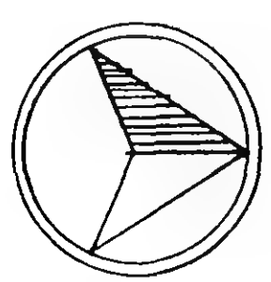

TOWER 'B'

LICENSED PROFESSIONAL ENGINEER — LESLIE E. ROBERTSON — No. 34360 — UNIVERSITY OF THE STATE OF NEW YORK

DESIGNED

DRAWN P. Orelli

REVIEWED

9-AB10-3

SKILLING, HELLE, CHRISTIANSEN, ROBERTSON — Structural & Civil Engineers

PROJECT THE WORLD TRADE CENTER | TITLE FL 107 -PH STRAP ANCHOR DETAILS- FL.109 | DATE 9-15-70

REVISIONS

501

508

706

10-13A

10-13B

906

1001

1008

KEY PLAN- FL. 109

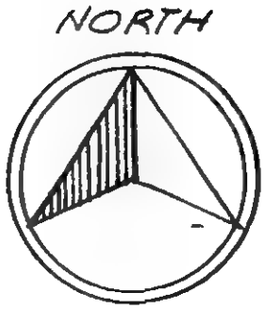

TOWER 'A'

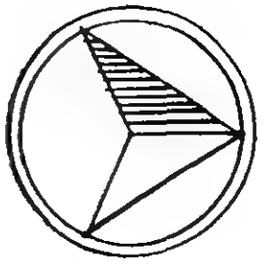

TOWER 'B'

LICENSED PROFESSIONAL ENGINEER
LESLIE E. ROBERTSON
No. 34360
UNIVERSITY OF THE STATE OF NEW YORK

DESIGNED

DRAWN P Orelli

REVIEWED

9-AB10-4

SKILLING, HELLE, CHRISTIANSEN, ROBERTSON — Structural & Civil Engineers

PROJECT	TITLE	DATE
THE WORLD TRADE CENTER	FL 107-PH STRAP ANCHOR DETAILS - FL 110	12/14/70

REVISIONS

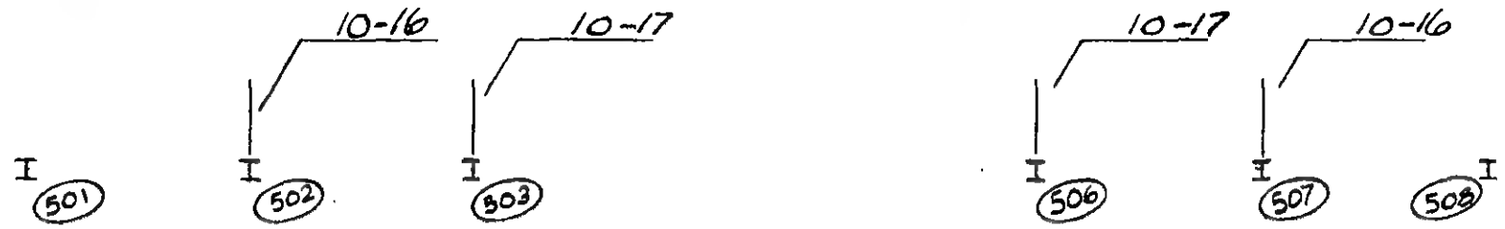

KEY PLAN-FL 110

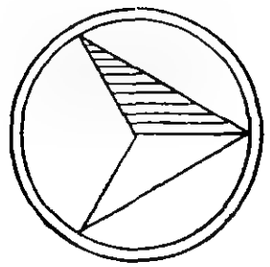

NORTH

TOWER 'B'

LICENSED PROFESSIONAL ENGINEER
LESLIE E. ROBERTSON
No. 34960
UNIVERSITY OF THE STATE OF NEW YORK

DESIGNED

DRAWN
T. Robertson

REVIEWED

9-B10-5

SKILLING, HELLE, CHRISTIANSEN, ROBERTSON — Structural & Civil Engineers

PROJECT	TITLE	DATE
THE WORLD TRADE CENTER	FL. 107 - PH STRAP ANCHOR DETAILS - PH ROOF	12/14/70

REVISIONS

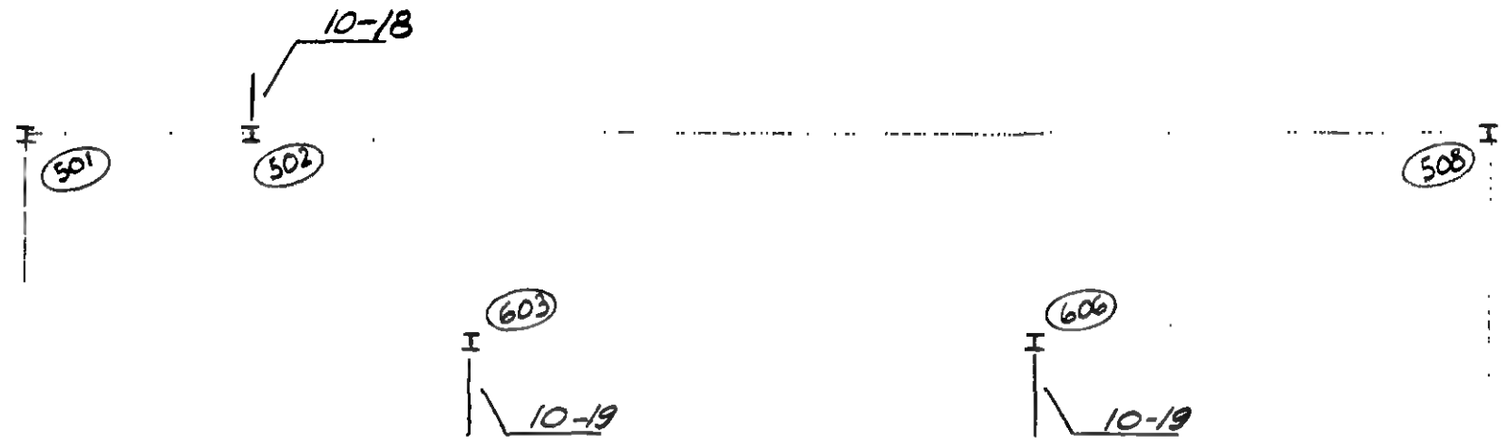

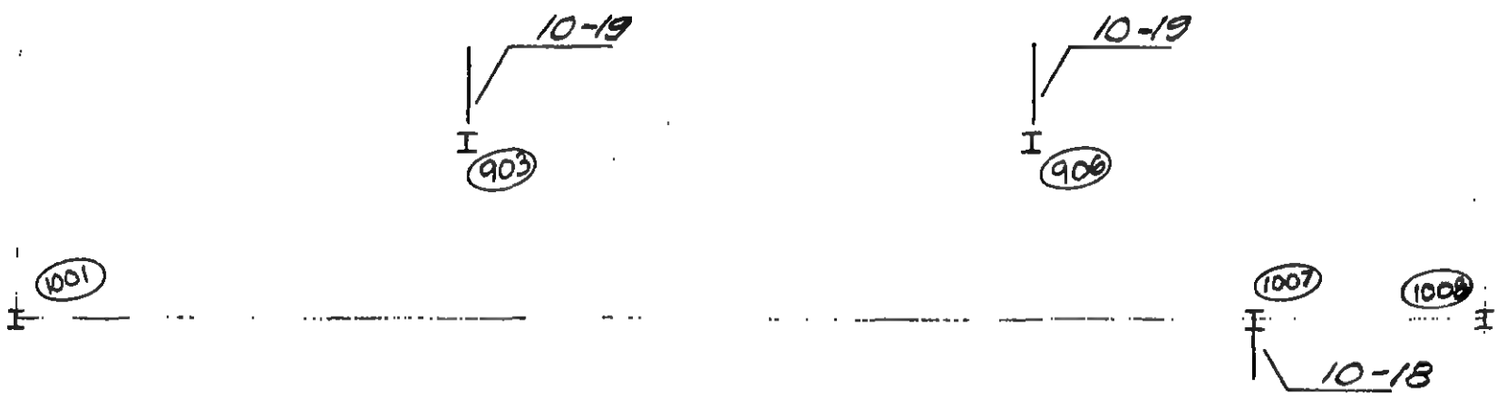

KEY PLAN - P.H. ROOF

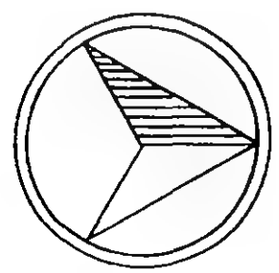

NORTH

TOWER 'B'

LICENSED PROFESSIONAL ENGINEER
LESLIE E. ROBERTSON
No. 34360
UNIVERSITY OF THE STATE OF NEW YORK

DESIGNED

DRAWN
I. Robertson

REVIEWED

9-B10-6

SKILLING, HELLE, CHRISTIANSEN, ROBERTSON — Structural & Civil Engineers

PROJECT THE WORLD TRADE CENTER | TITLE FL 107-PH STRAP ANCHOR DETAILS | DATE 9-15-70

REVISIONS

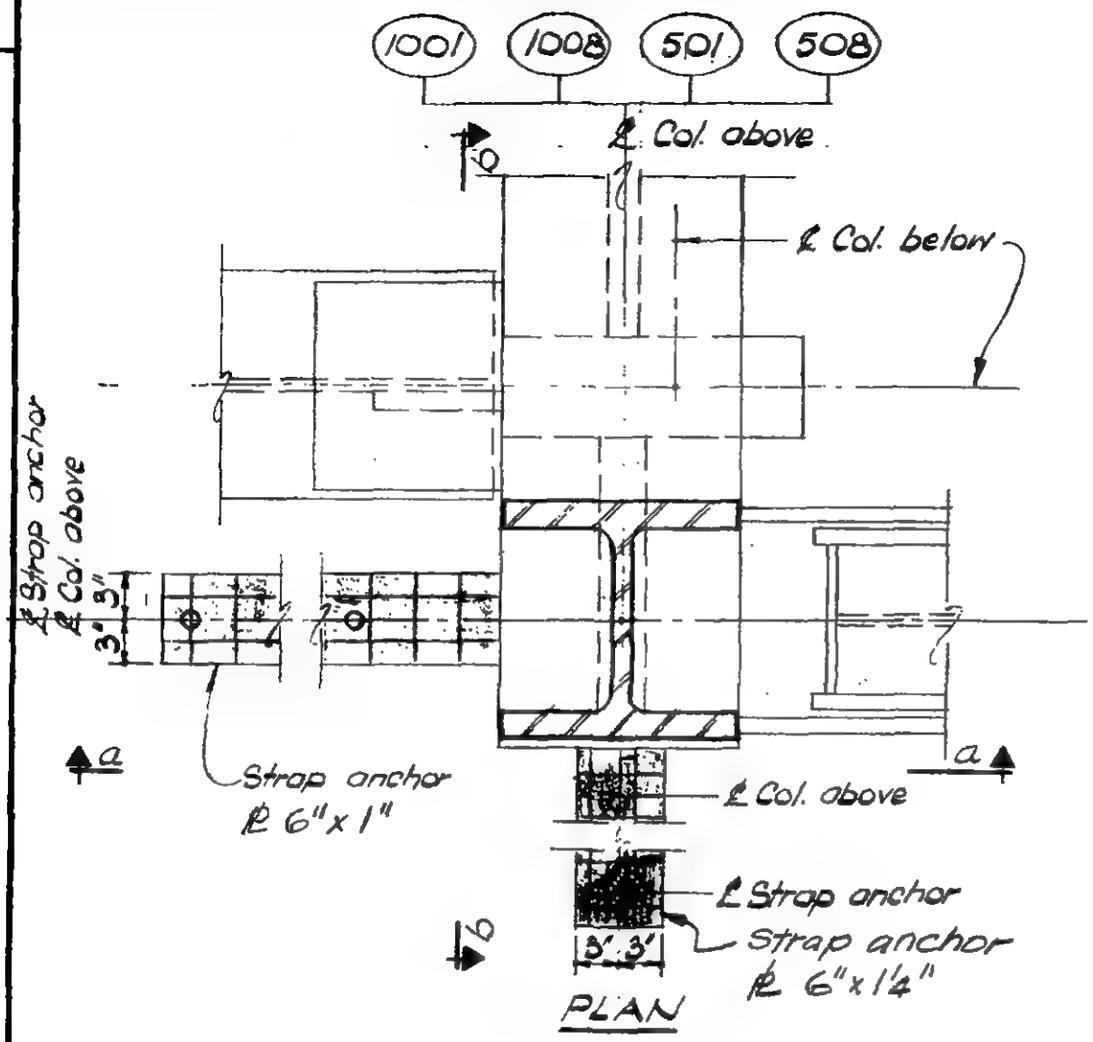

PLAN

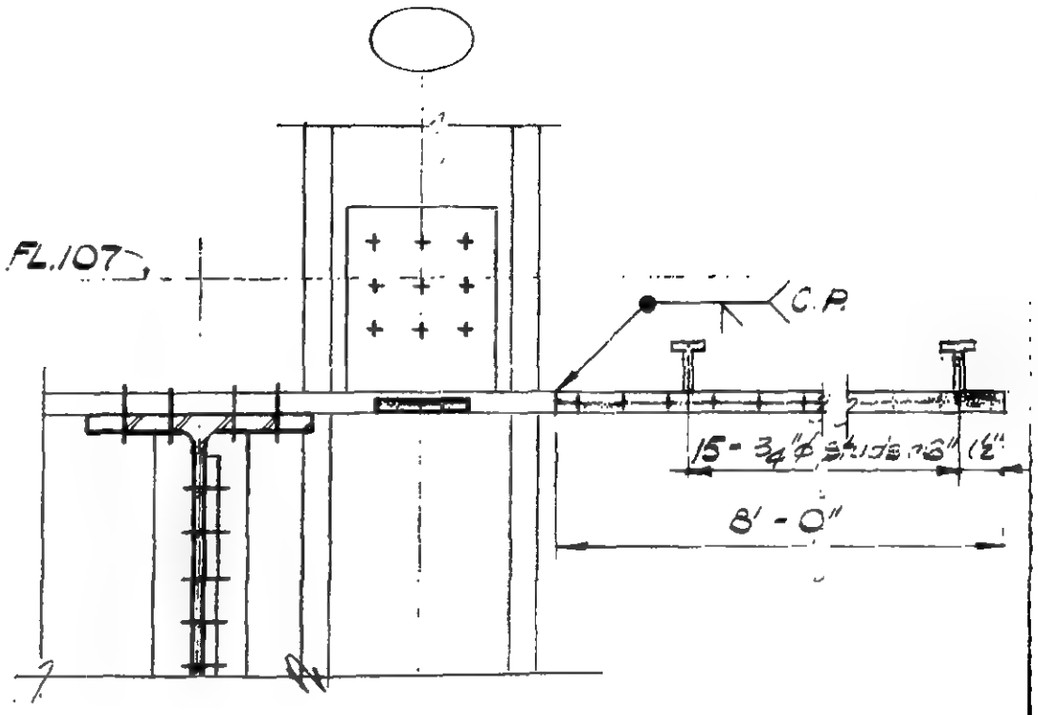

Section b-b

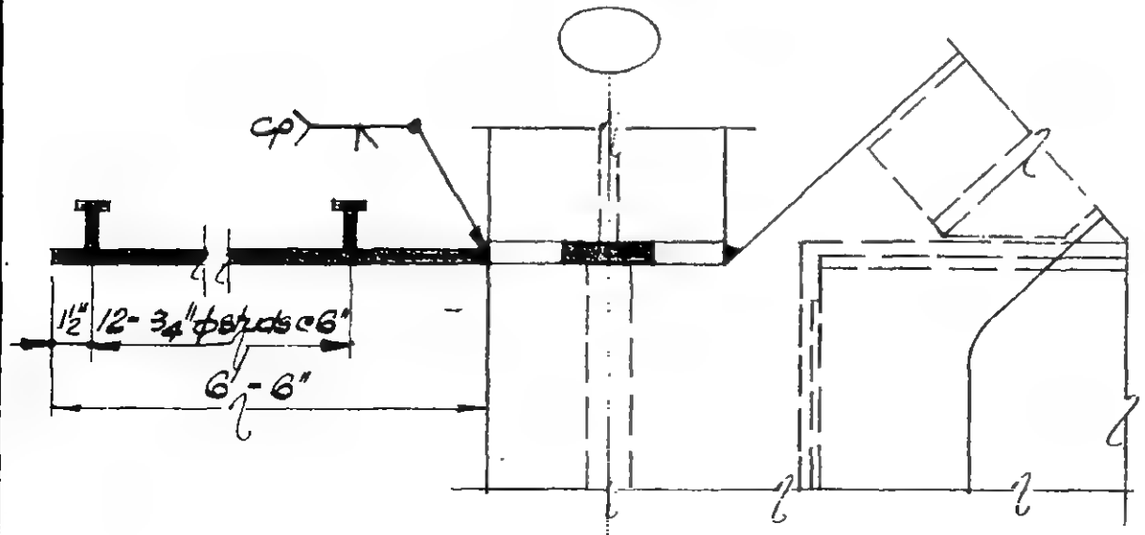

Section a-a

DETAIL 10-7

LICENSED PROFESSIONAL ENGINEER — LESLIE E. ROBERTSON — No 34960 — UNIVERSITY OF THE STATE OF NEW YORK

DESIGNED

DRAWN W. Clarke

REVIEWED

9-AB10-7

SKILLING, HELLE, CHRISTIANSEN, ROBERTSON — Structural & Civil Engineers

PROJECT THE WORLD TRADE CENTER | TITLE FL 107 - PH STRAP ANCHOR DETAILS | DATE 9-15-70

REVISIONS

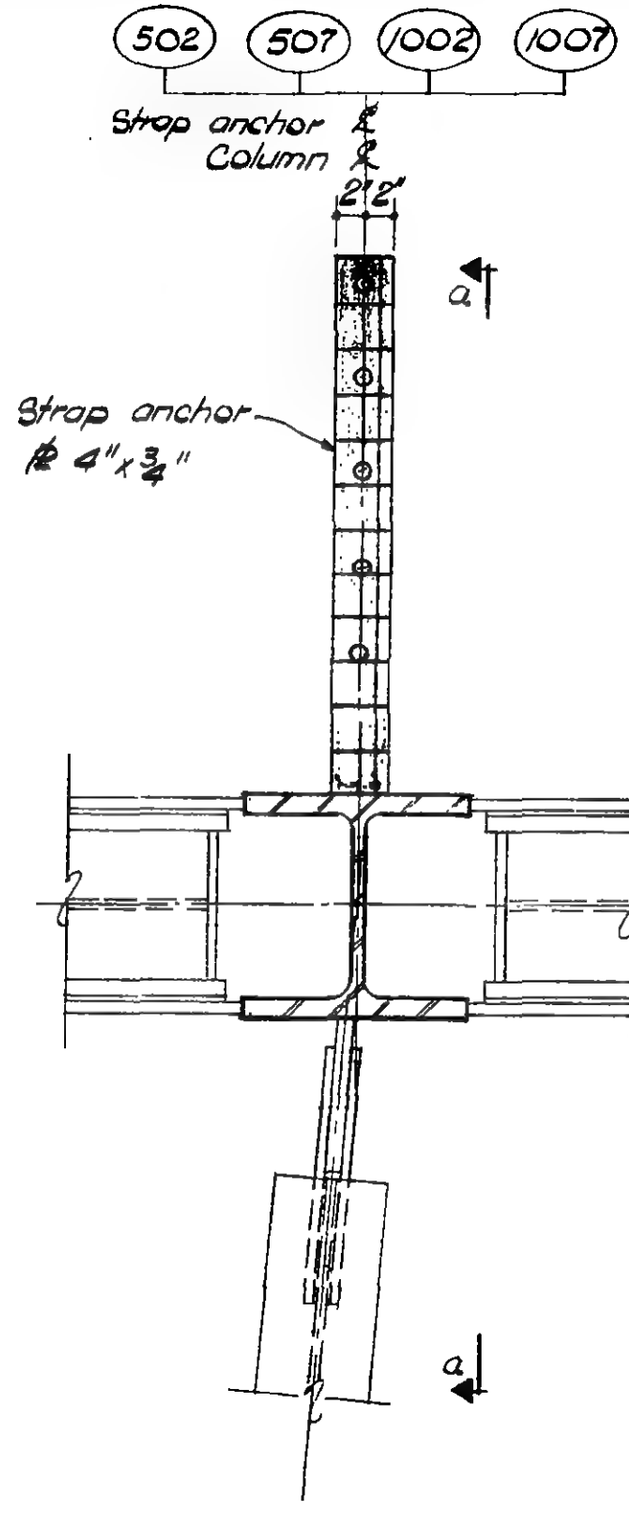

PLAN

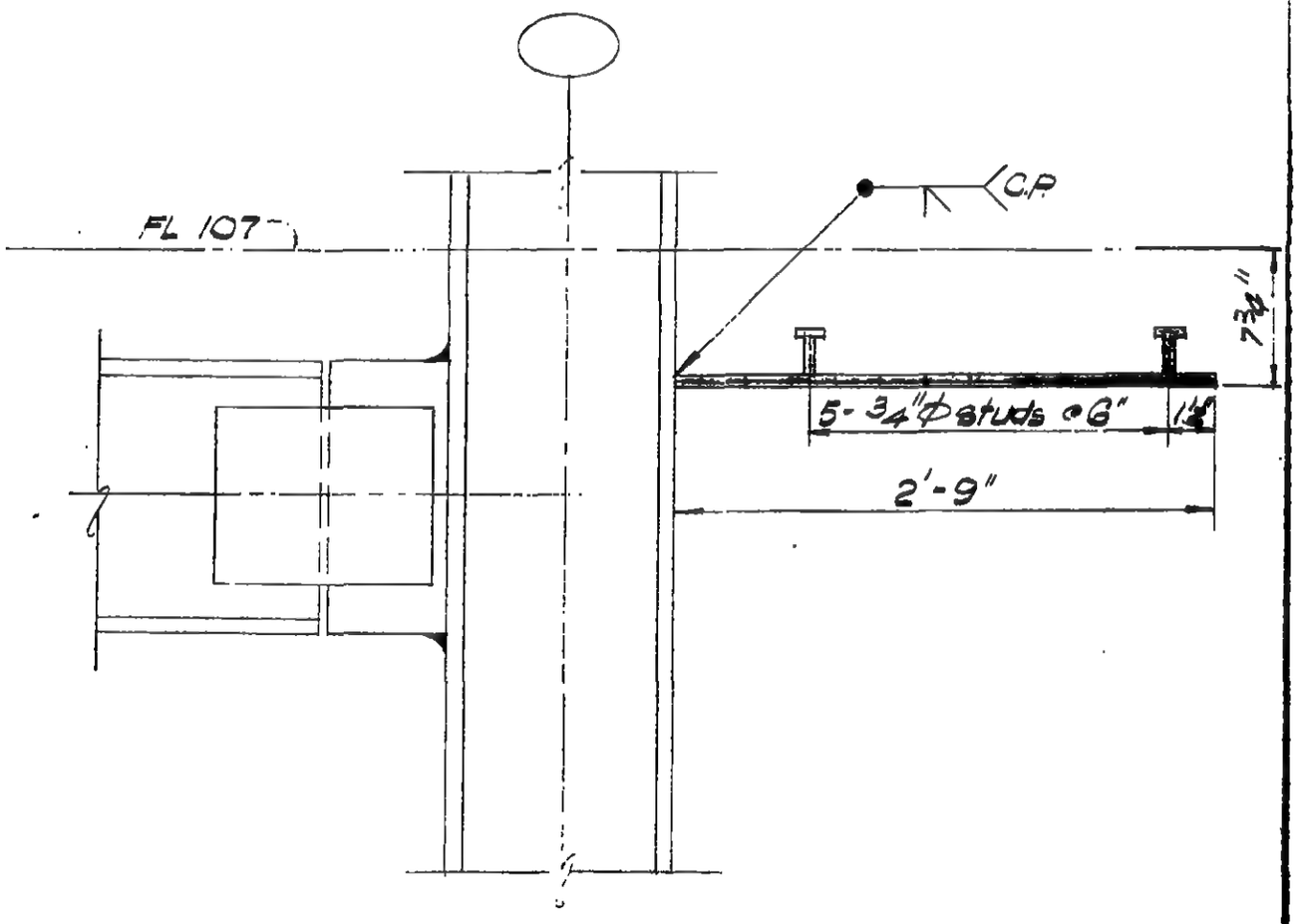

Section a-a

DETAIL 10-8

LICENSED PROFESSIONAL ENGINEER
LESLIE E. ROBERTSON
No. 34360
UNIVERSITY OF THE STATE OF NEW YORK

DESIGNED

DRAWN W. Clarke

REVIEWED

9-AB10-8

SKILLING, HELLE, CHRISTIANSEN, ROBERTSON — Structural & Civil Engineers

PROJECT THE WORLD TRADE CENTER | TITLE FL 107 - PH STRAP ANCHOR DETAILS | DATE 9-15-70

REVISIONS

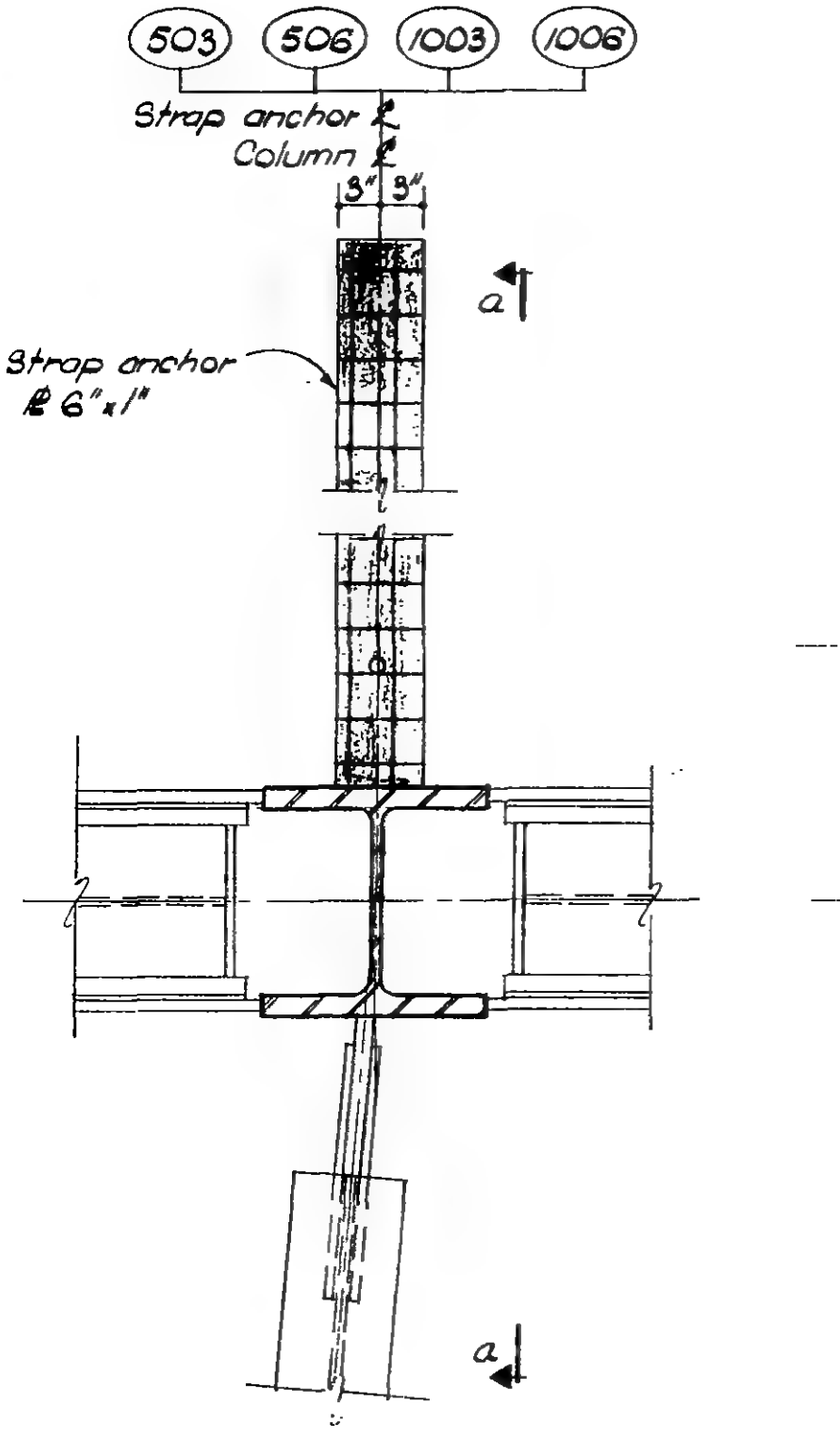

PLAN

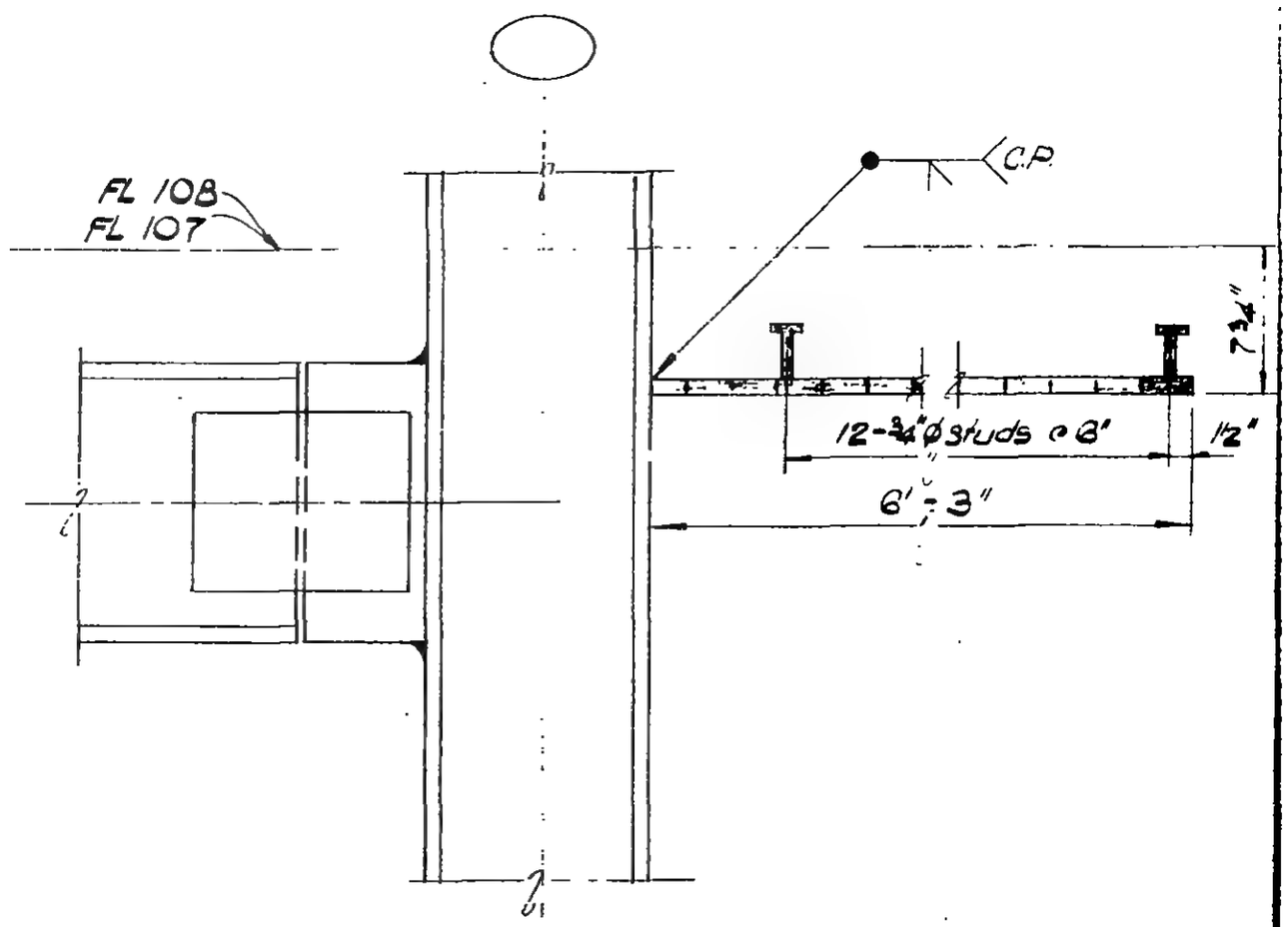

Section a-a

DETAIL 10-9

LICENSED PROFESSIONAL ENGINEER
LESLIE E. ROBERTSON
No 34360
UNIVERSITY OF THE STATE OF NEW YORK

DESIGNED

DRAWN W. Clarke

REVIEWED

9-AB10-9

SKILLING, HELLE, CHRISTIANSEN, ROBERTSON — Structural & Civil Engineers

PROJECT: THE WORLD TRADE CENTER | TITLE: FL 107 - RH STRAP ANCHOR DETAILS | DATE: 9-15-70

REVISIONS

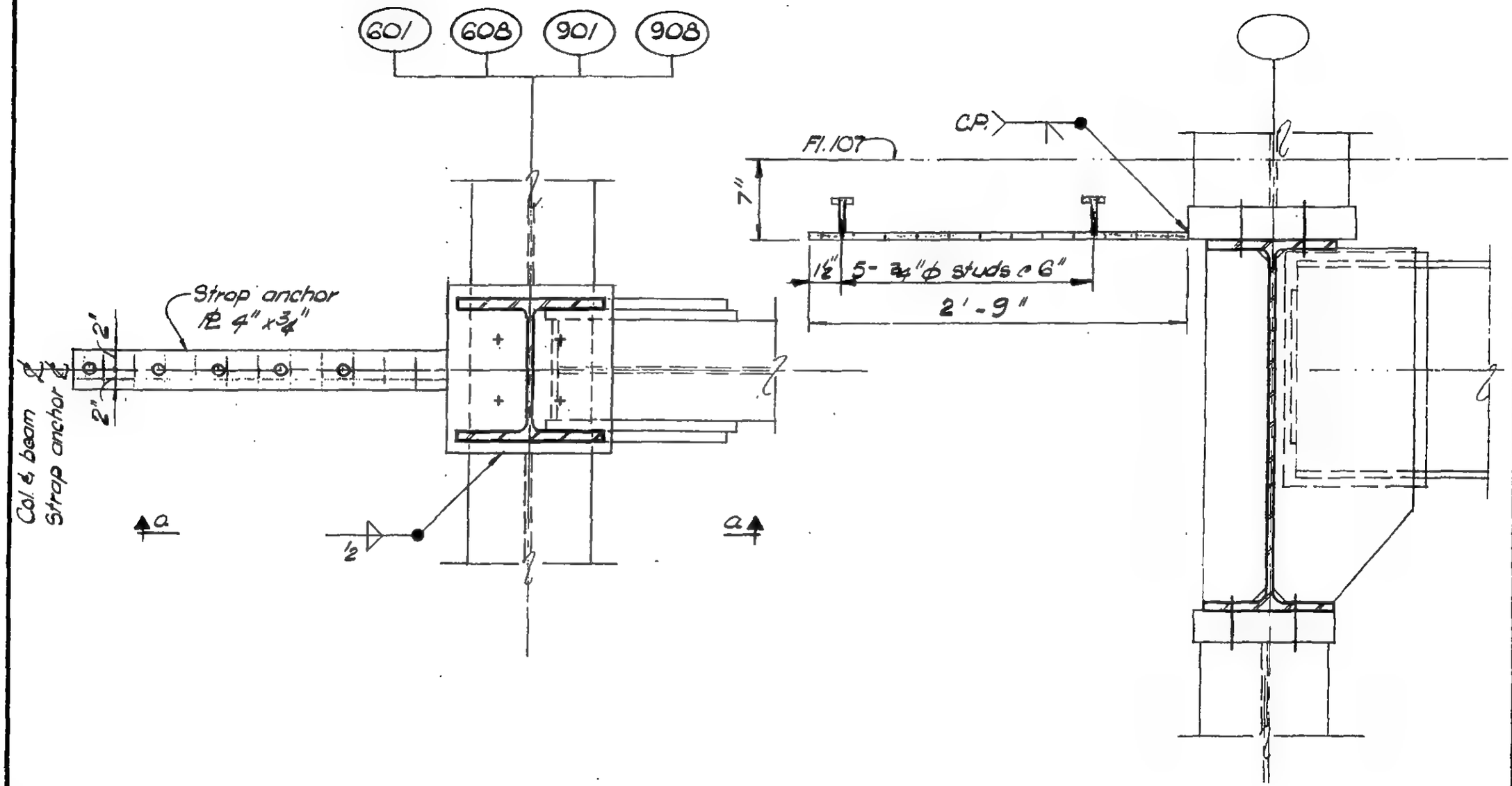

PLAN

Section a-a

DETAIL 10-10

LICENSED PROFESSIONAL ENGINEER — LESLIE E. ROBERTSON — No. 34360 — UNIVERSITY OF THE STATE OF NEW YORK

DESIGNED

DRAWN
W. Clarke

REVIEWED

9-AB10-10

SKILLING, HELLE, CHRISTIANSEN, ROBERTSON — Structural & Civil Engineers

PROJECT: THE WORLD TRADE CENTER | TITLE: FL 107 - PH STRAP ANCHOR DETAILS | DATE: 9-16-70

REVISIONS

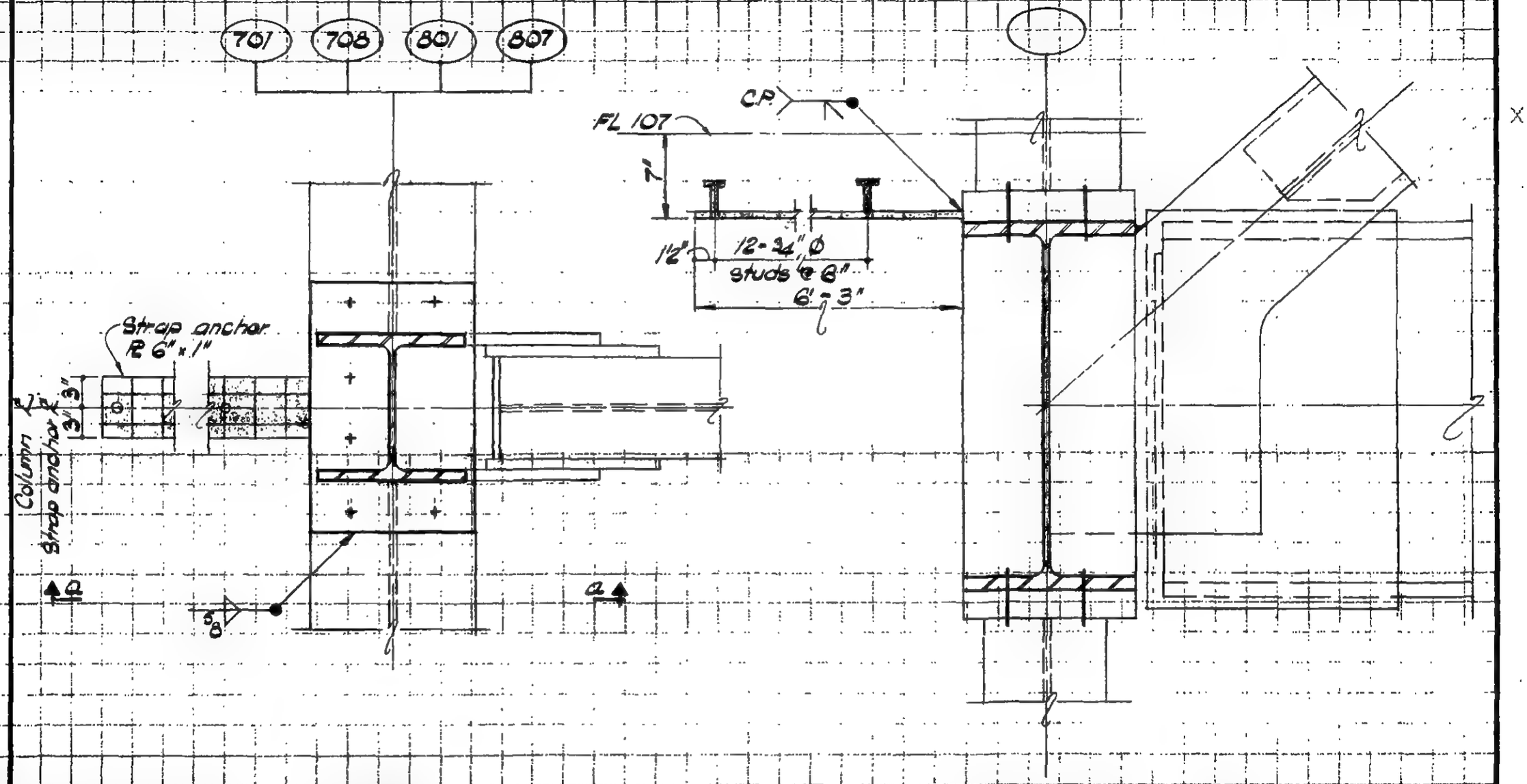

PLAN

Section a-a

DETAIL 10-11

LICENSED PROFESSIONAL ENGINEER
LESLIE E. ROBERTSON
No. 34360
UNIVERSITY OF THE STATE OF NEW YORK

DESIGNED

DRAWN
W. Clarke

REVIEWED

9-AB10-11

SKILLING, HELLE, CHRISTIANSEN, ROBERTSON — Structural & Civil Engineers

PROJECT: THE WORLD TRADE CENTER | TITLE: FL 107 - PH STRAP ANCHOR DETAILS | DATE: 9-15-70

REVISIONS

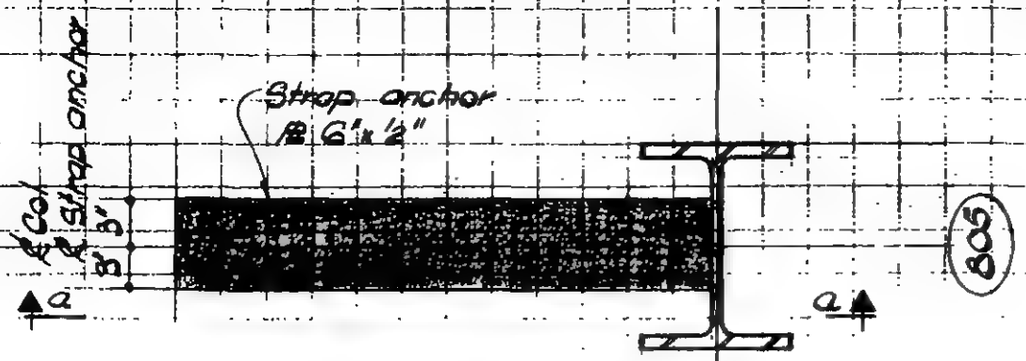

PLAN 10-12A

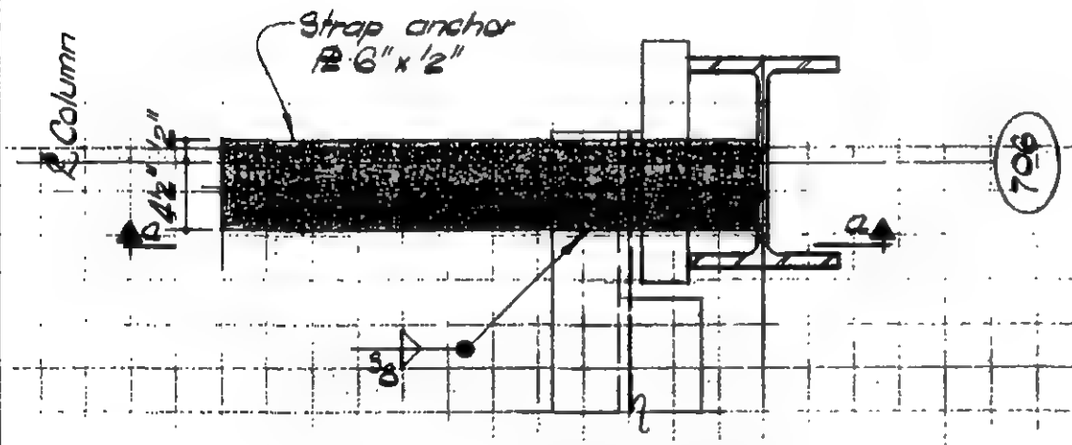

PLAN 10-12B

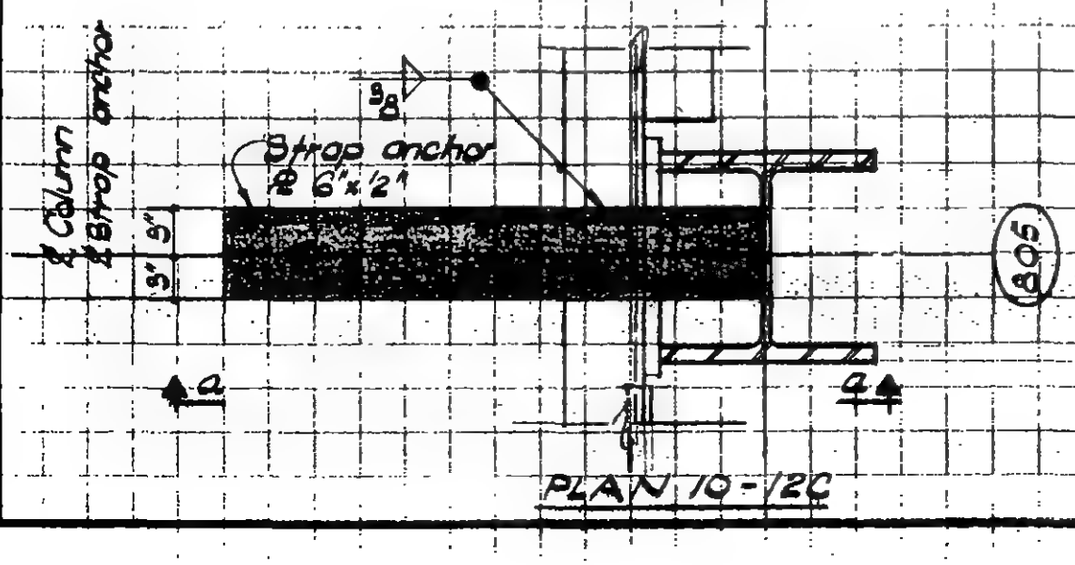

PLAN 10-12C

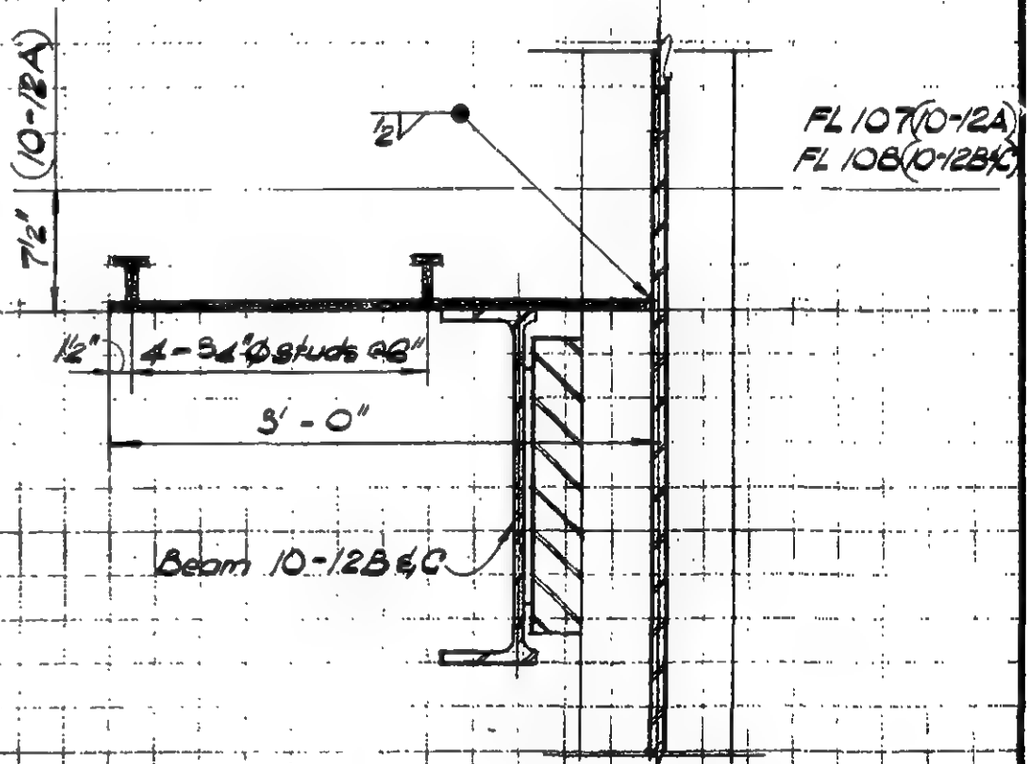

Section a-a

LICENSED PROFESSIONAL ENGINEER
LESLIE E. ROBERTSON
NO. 34360
UNIVERSITY OF THE STATE OF NEW YORK

DESIGNED

DRAWN
M. Clarke

REVIEWED

9-AB10-12

SKILLING, HELLE, CHRISTIANSEN, ROBERTSON — Structural & Civil Engineers

PROJECT: THE WORLD TRADE CENTER | TITLE: FL-107 - PH STRAP ANCHOR DETAILS | DATE: 9-15-70

REVISIONS

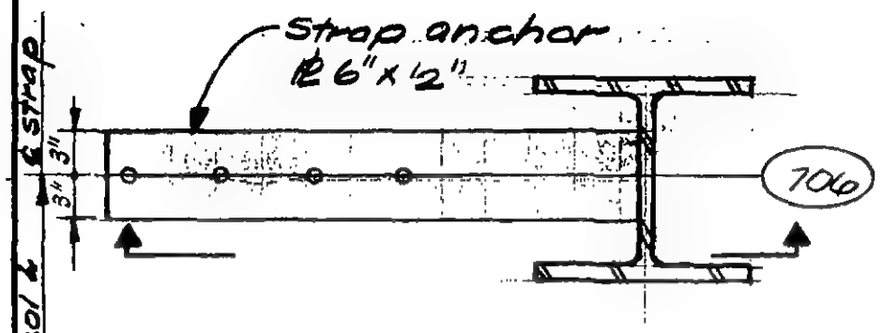

Plan

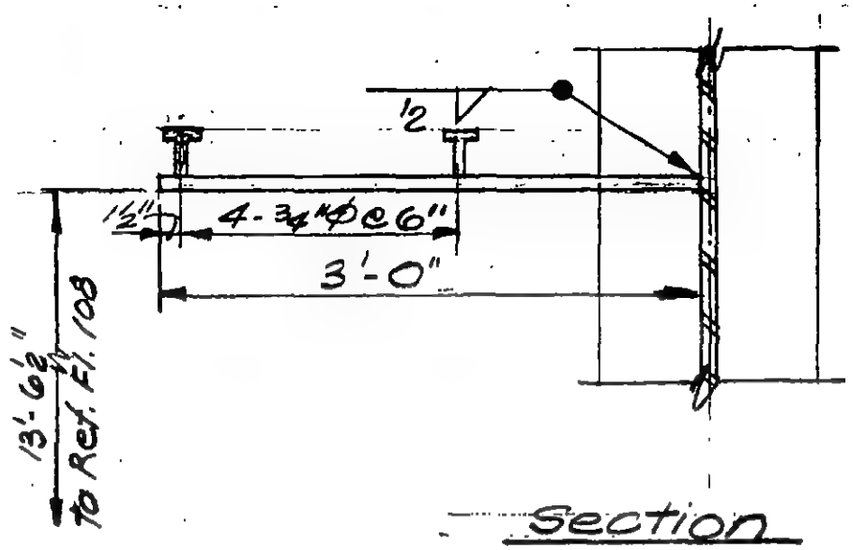

Section

DETAIL 10-13A

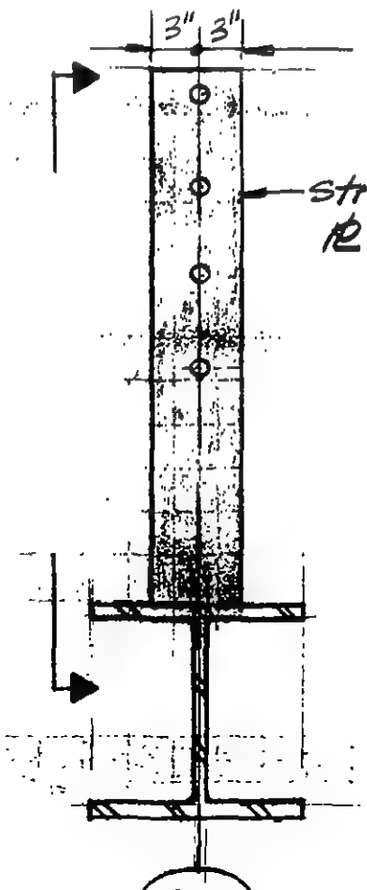

Plan

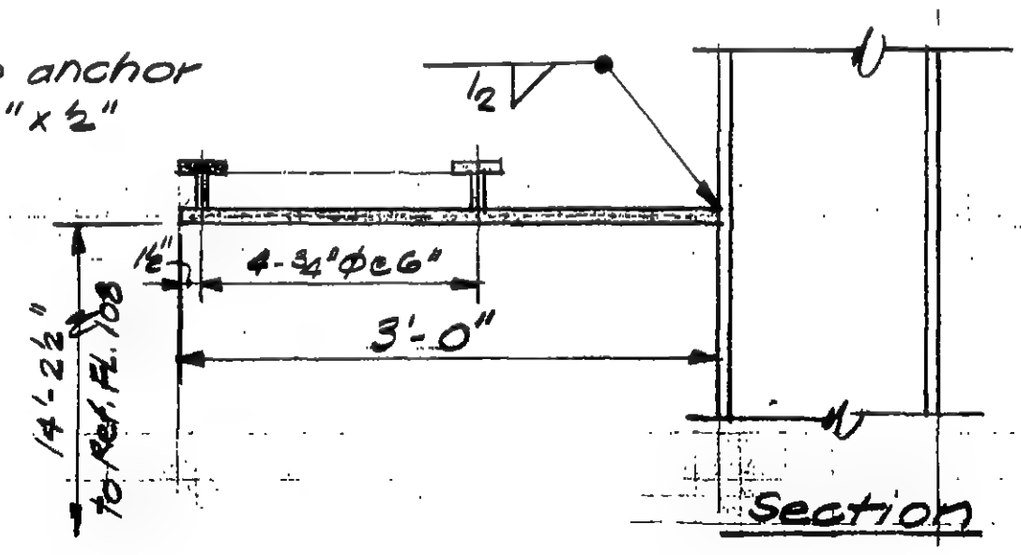

Section

DETAIL 10-13B

LICENSED PROFESSIONAL ENGINEER
LESLIE E. ROBERTSON
No. 34560
UNIVERSITY OF THE STATE OF NEW YORK

DESIGNED

DRAWN L. Ozaki

REVIEWED

9-AB10-13

SKILLING, HELLE, CHRISTIANSEN, ROBERTSON — Structural & Civil Engineers

PROJECT: THE WORLD TRADE CENTER | TITLE: FL.107-PH STRAP ANCHOR DETAILS | DATE: 12/14/70

REVISIONS

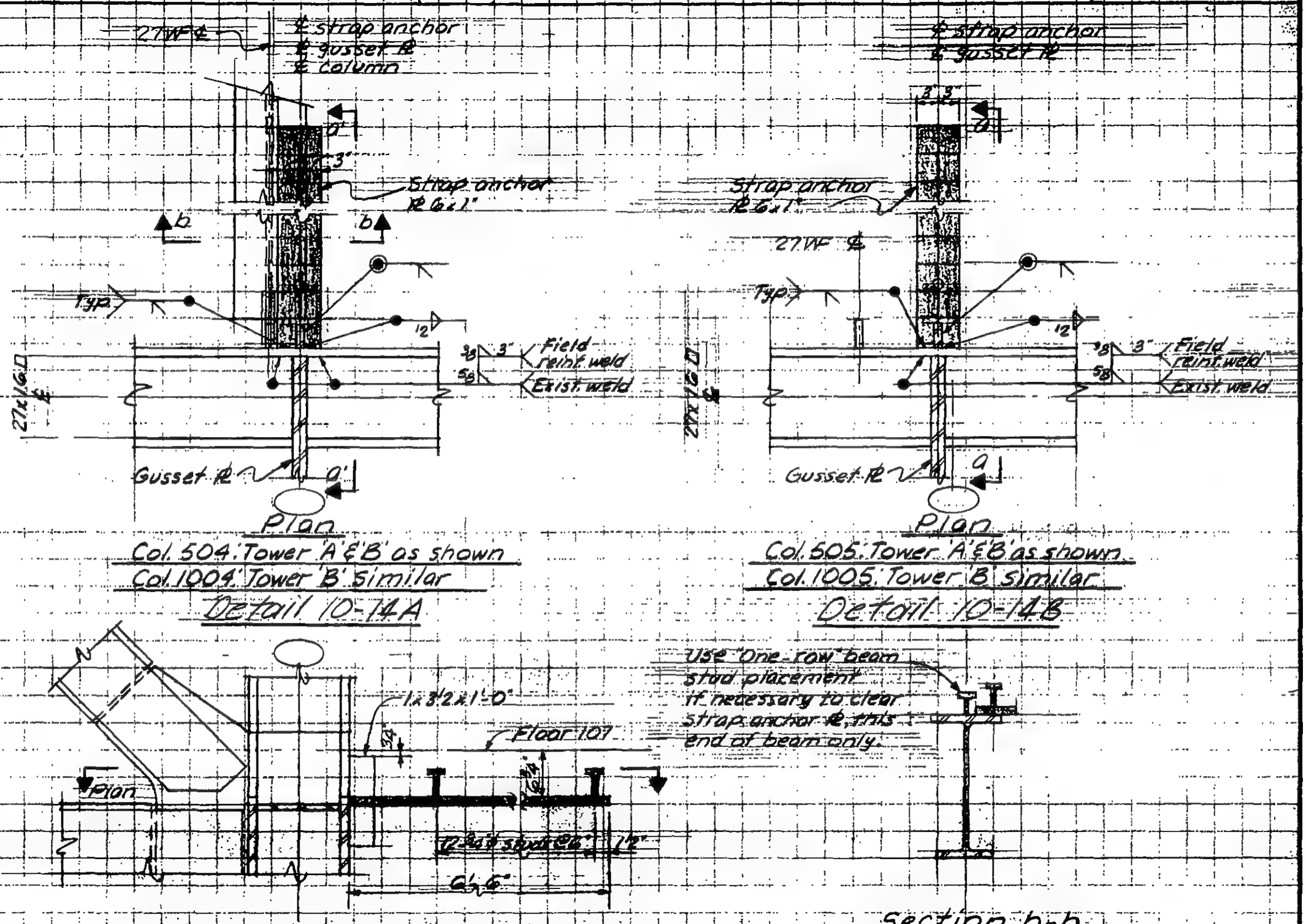

LICENSED PROFESSIONAL ENGINEER — LEMUEL E. ROBERTSON — No. 34960 — UNIVERSITY OF THE STATE OF NEW YORK

DESIGNED

DRAWN R. ARAGON

REVIEWED

9-ABIO-14

SKILLING, HELLE, CHRISTIANSEN, ROBERTSON — Structural & Civil Engineers

PROJECT: THE WORLD TRADE CENTER | TITLE: FLIOT AH STRAP ANCHOR DETAILS | DATE: 12/14/70

REVISIONS

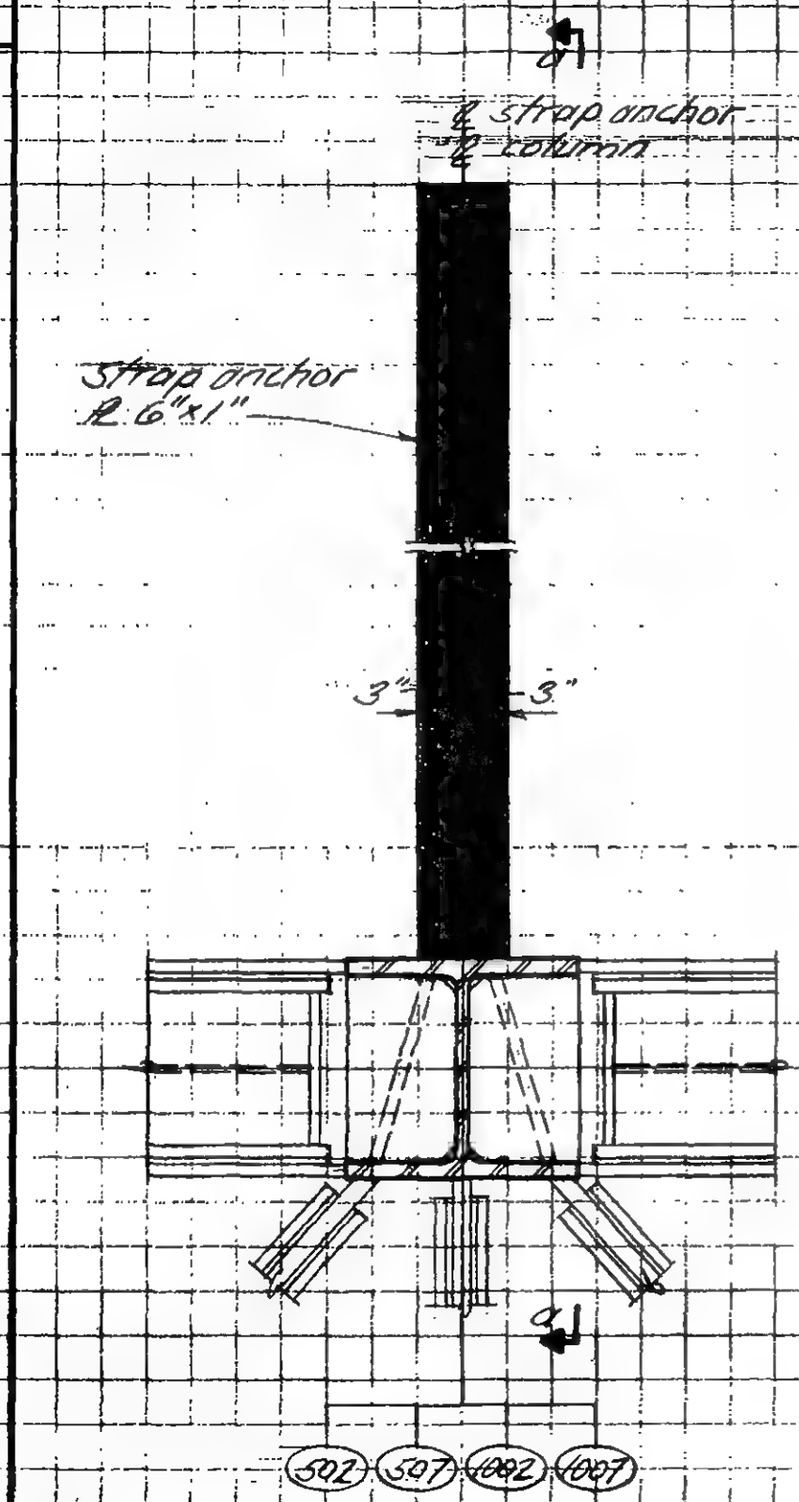

Plan

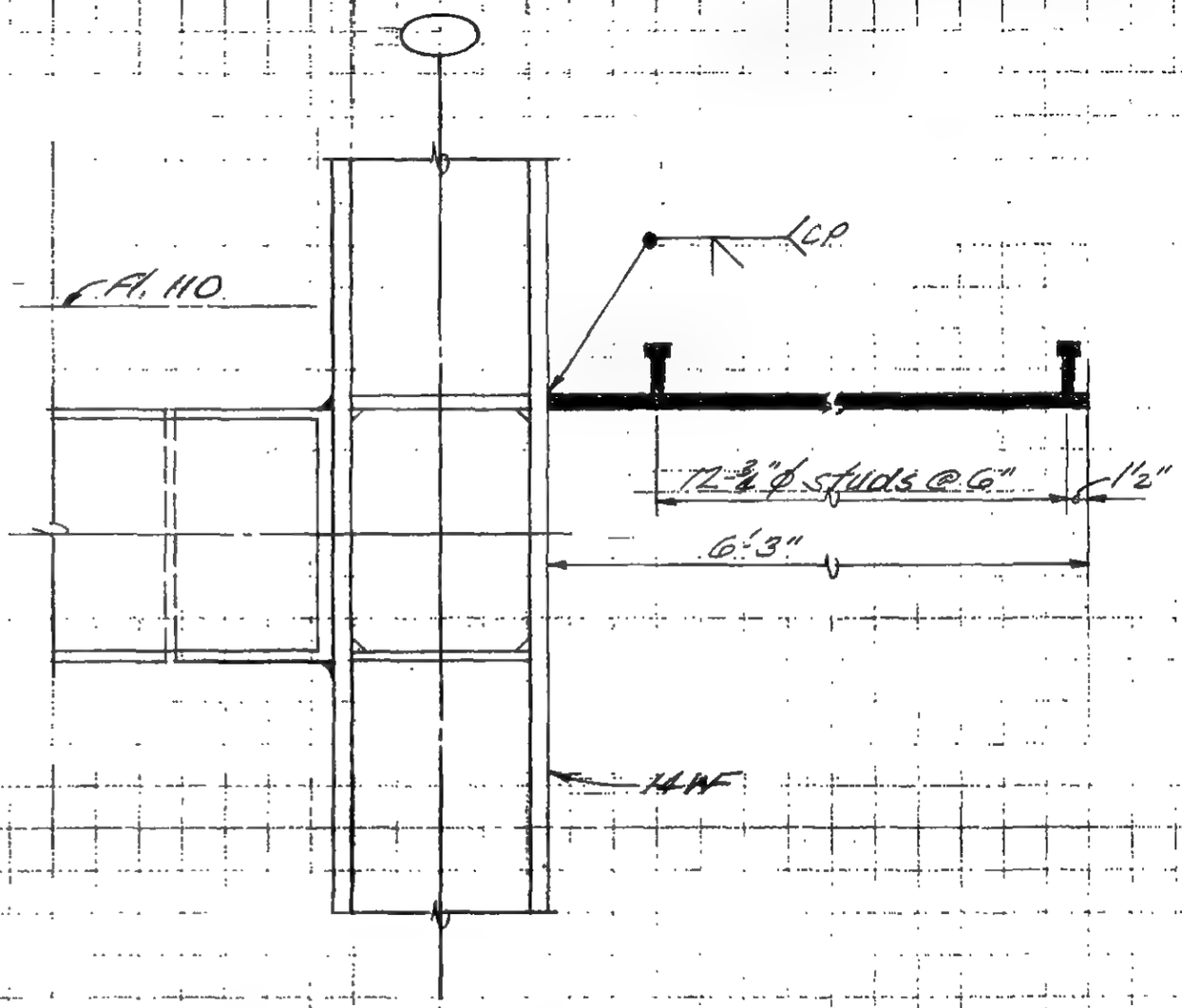

Section a-a

LICENSED PROFESSIONAL ENGINEER
LESLIE E. ROBERTSON
No. 34360
UNIVERSITY OF THE STATE OF NEW YORK

DESIGNED

DRAWN
J. Adams

REVIEWED

9-870-16

SKILLING, HELLE, CHRISTIANSEN, ROBERTSON — Structural & Civil Engineers

PROJECT: THE WORLD TRADE CENTER | TITLE: FL 107 PH STRAP ANCHOR DETAILS | DATE: 12/14/70

REVISIONS

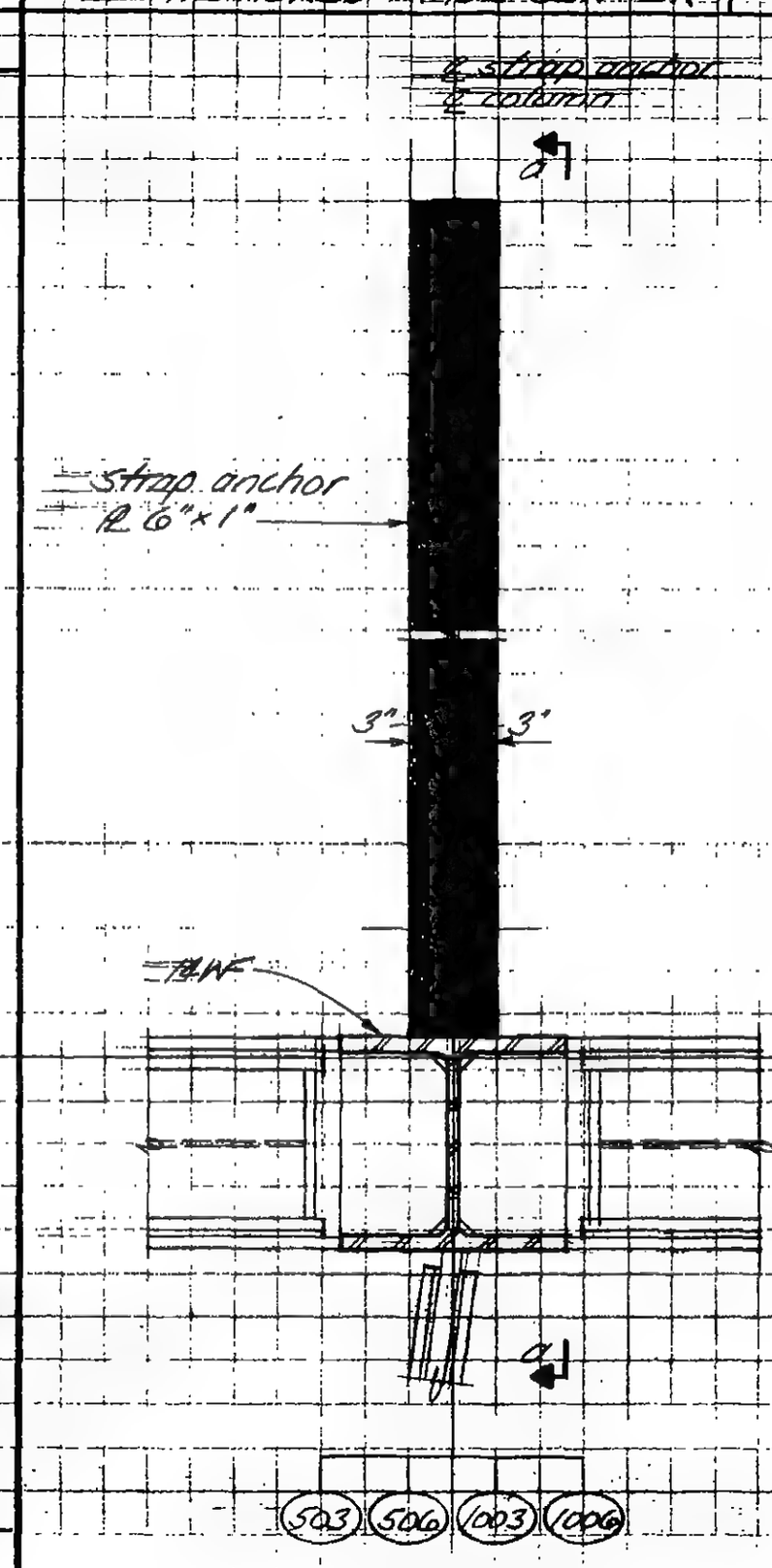

Plan

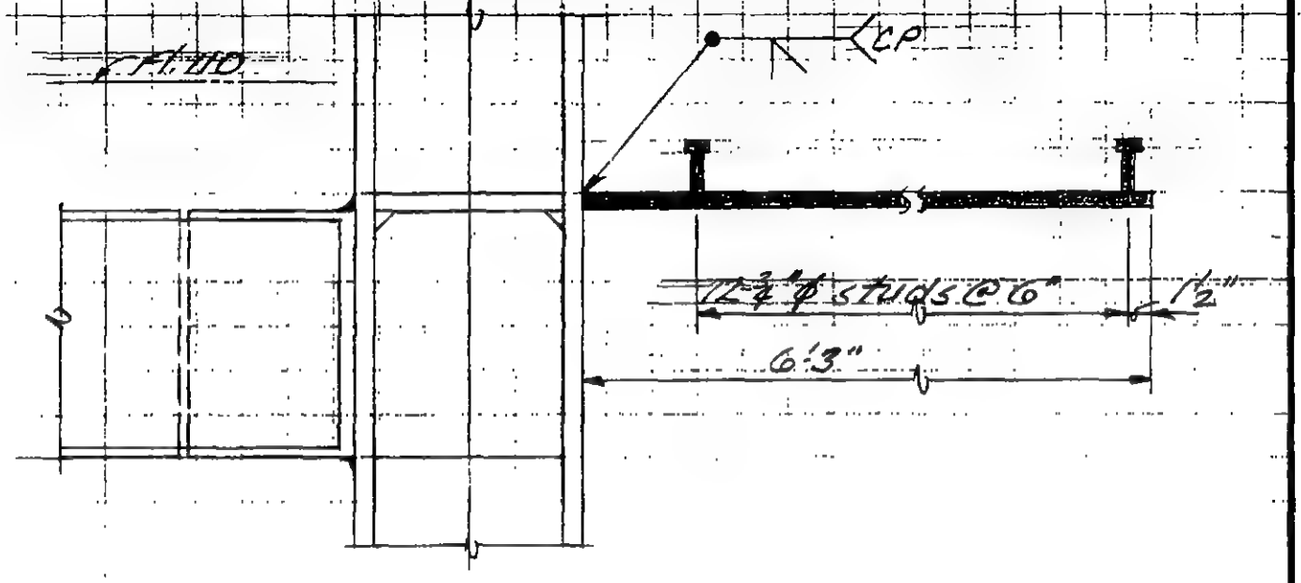

Section a-a

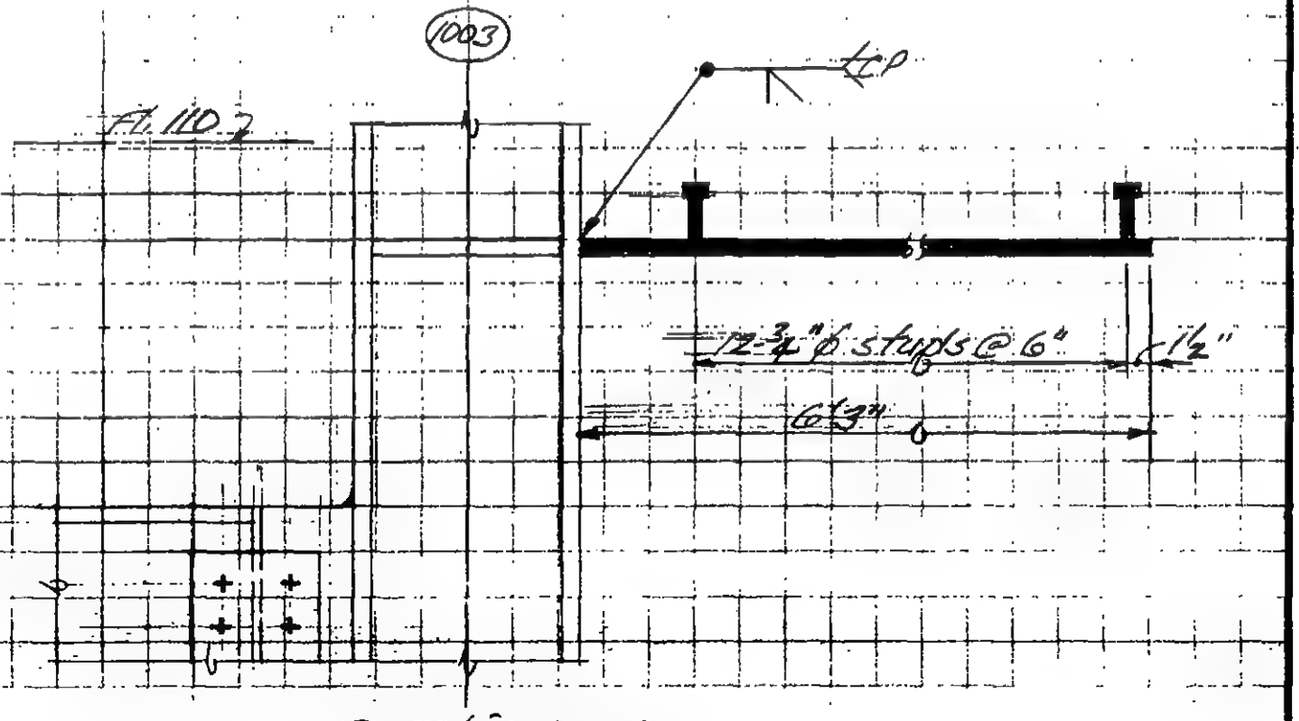

Section a-a

LICENSED PROFESSIONAL ENGINEER
LESLIE E. ROBERTSON
No. 34360
UNIVERSITY OF THE STATE OF NEW YORK

DESIGNED

DRAWN

REVIEWED

9-210-17

SKILLING, HELLE, CHRISTIANSEN, ROBERTSON — Structural & Civil Engineers

PROJECT THE WORLD TRADE CENTER | TITLE PH ROOF STRAP ANCHOR DETAILS | DATE 12/14/70

REVISIONS

502 1007

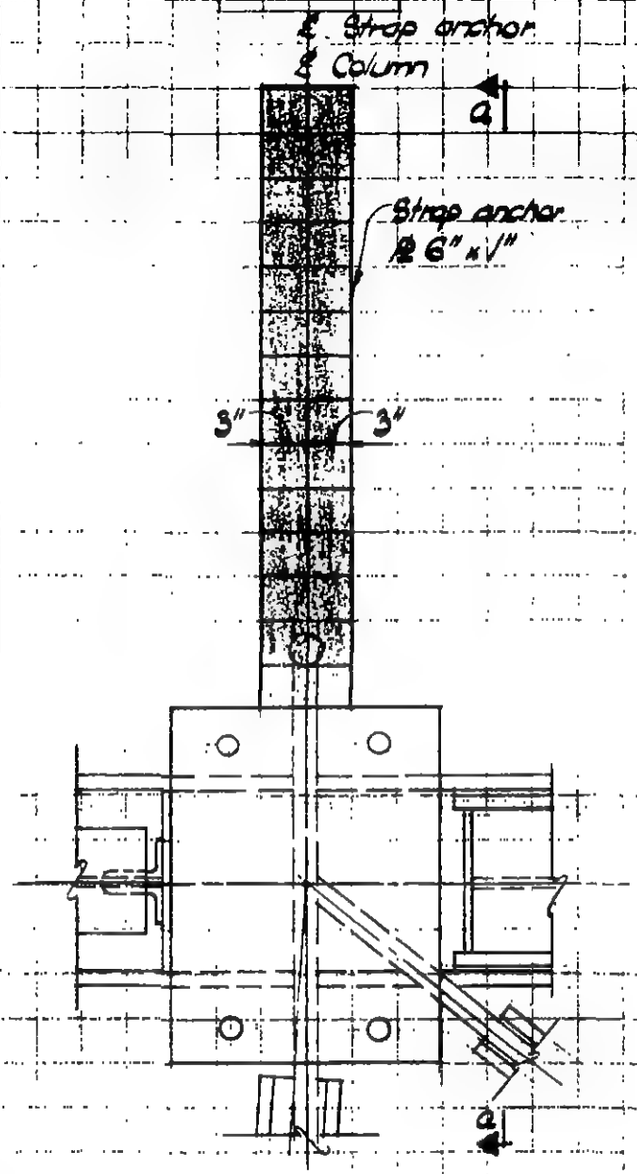

PLAN

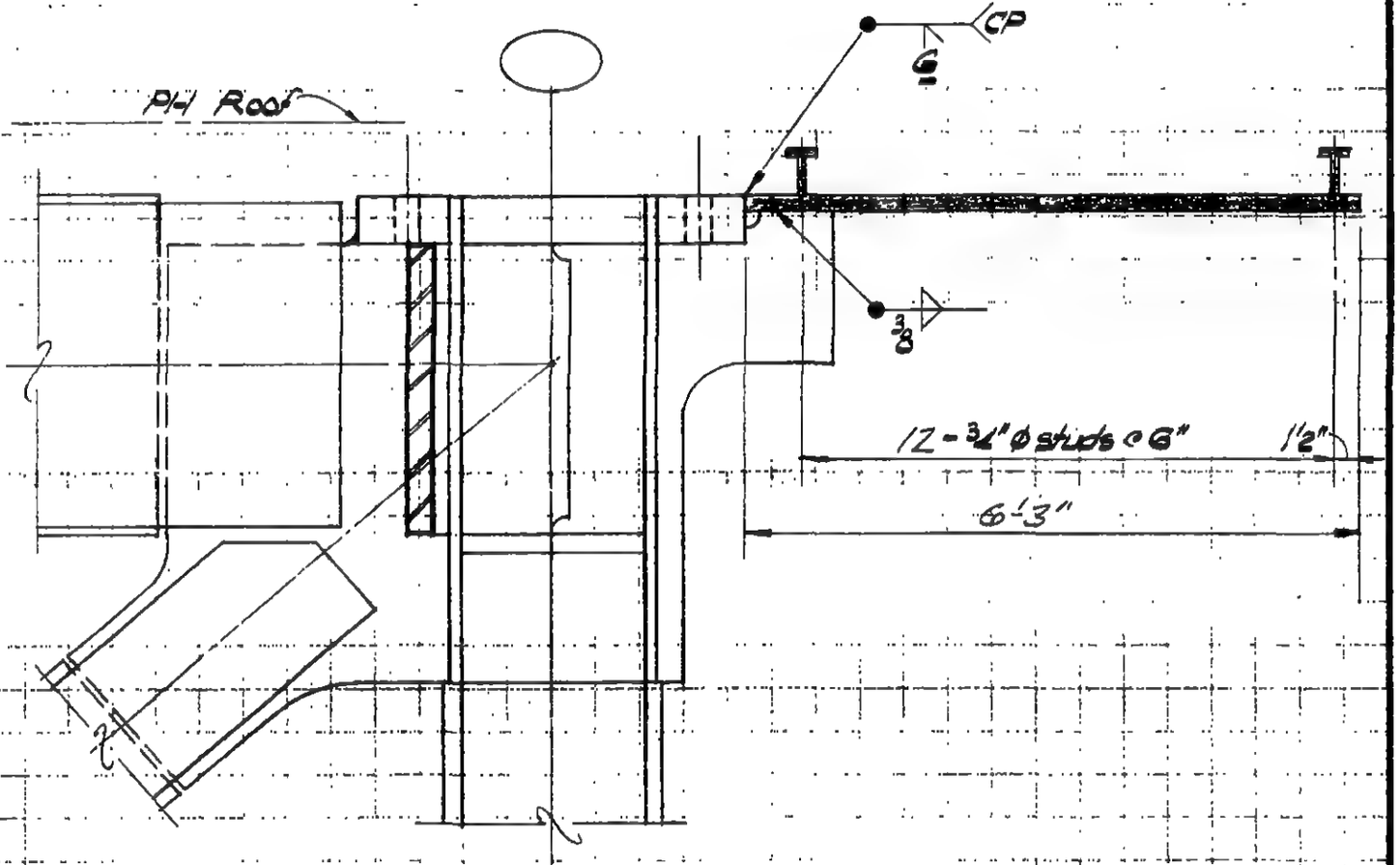

Section a - a

LICENSED PROFESSIONAL ENGINEER
LESLIE E. ROBERTSON
No. 34360
UNIVERSITY OF THE STATE OF NEW YORK

DESIGNED

DRAWN
W. Clarke

REVIEWED

9 - 8/10-78

SKILLING, HELLE, CHRISTIANSEN, ROBERTSON — Structural & Civil Engineers

PROJECT: THE WORLD TRADE CENTER | TITLE: PH ROOF STRAP ANCHOR DETAILS | DATE: 12/14/70

REVISIONS

603 606 905 906

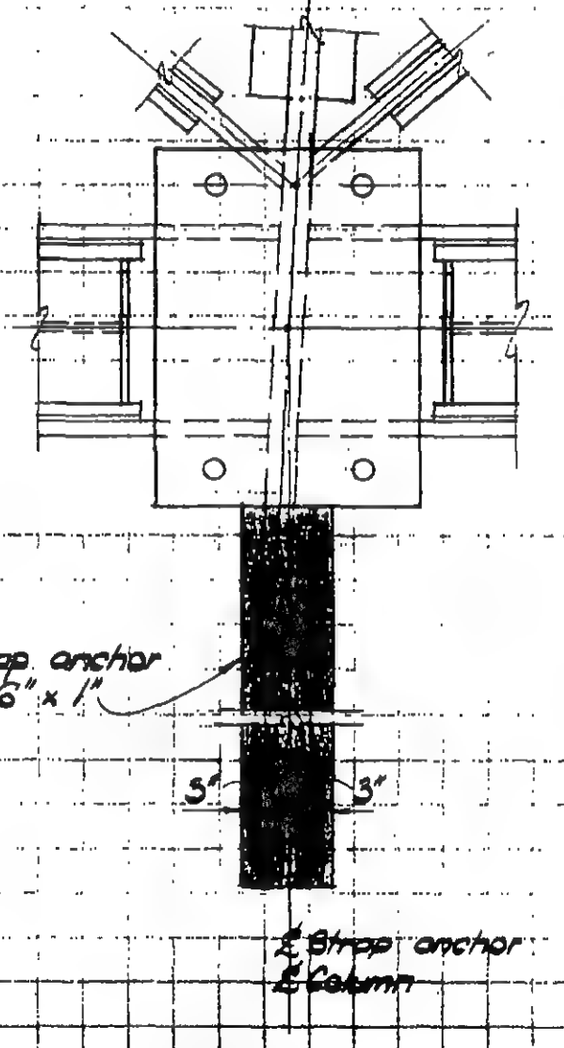

PLAN

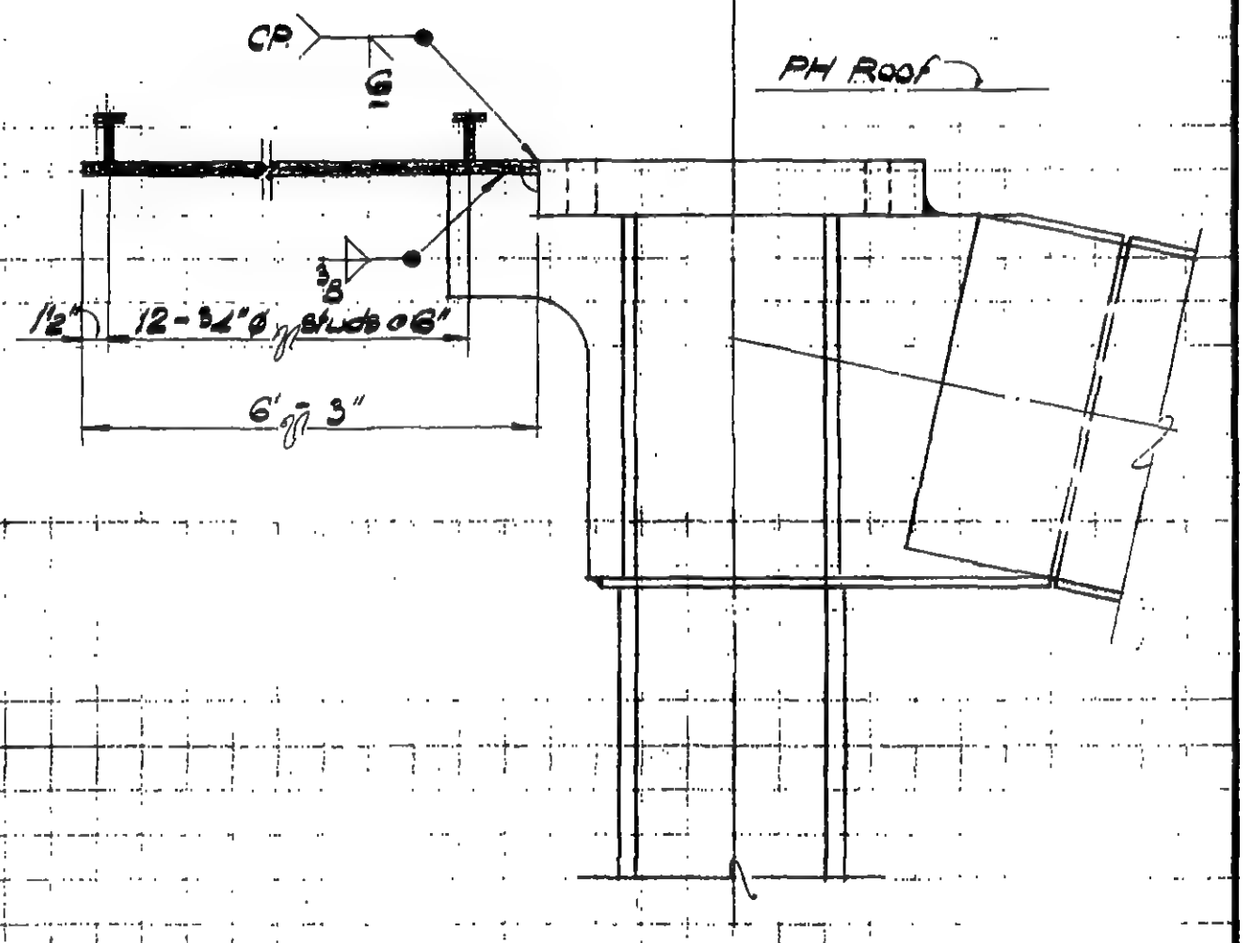

Section a - a

LICENSED PROFESSIONAL ENGINEER
LESLIE E. ROBERTSON
No. 34360
UNIVERSITY OF THE STATE OF NEW YORK

DESIGNED

DRAWN: M. Starta

REVIEWED

9-B10-19

SKILLING, HELLE, CHRISTIANSEN, ROBERTSON — Structural & Civil Engineers

PROJECT: THE WORLD TRADE CENTER | TITLE: FL.107-PH. CONNECTION DETAILS-BEAM TO BEAM | DATE: 4 - 1 - 70

REVISIONS

5/27/70

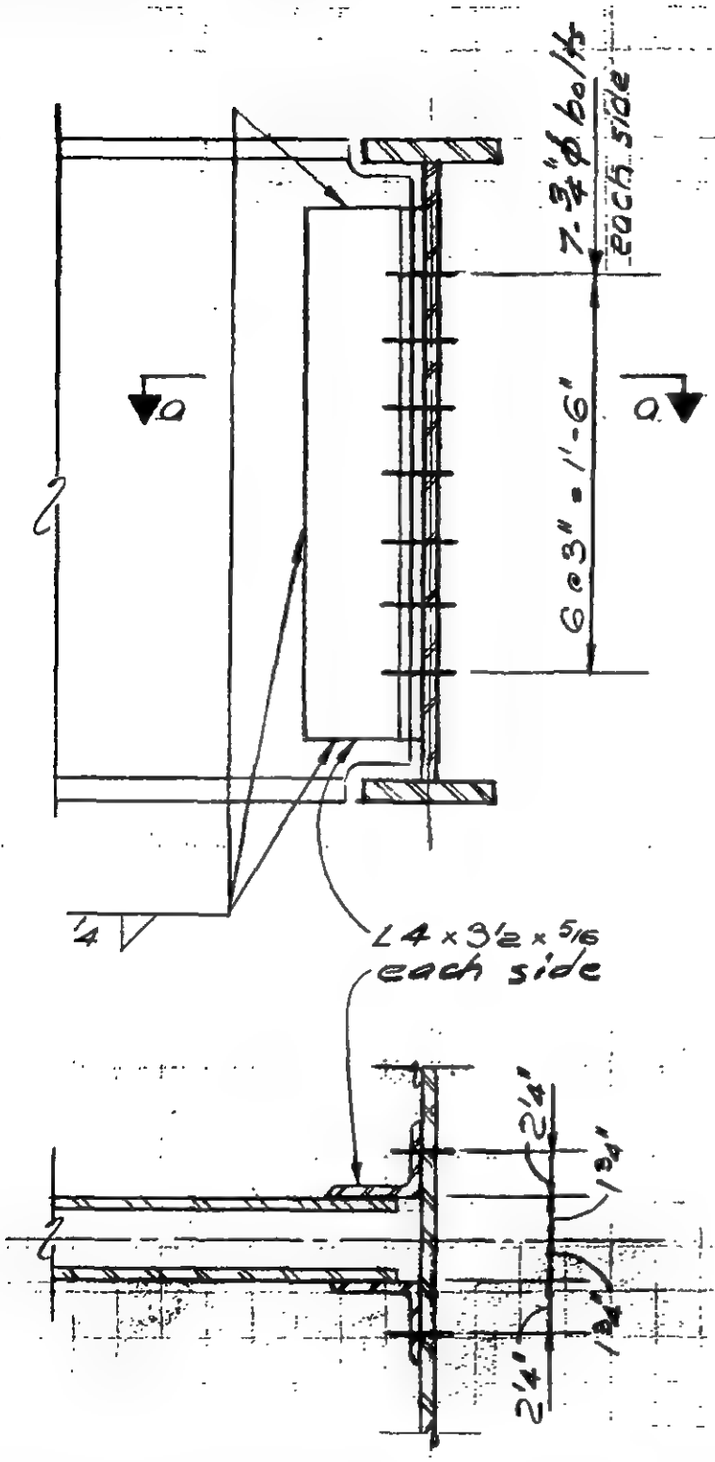

Section a-a

DETAIL 11-2A

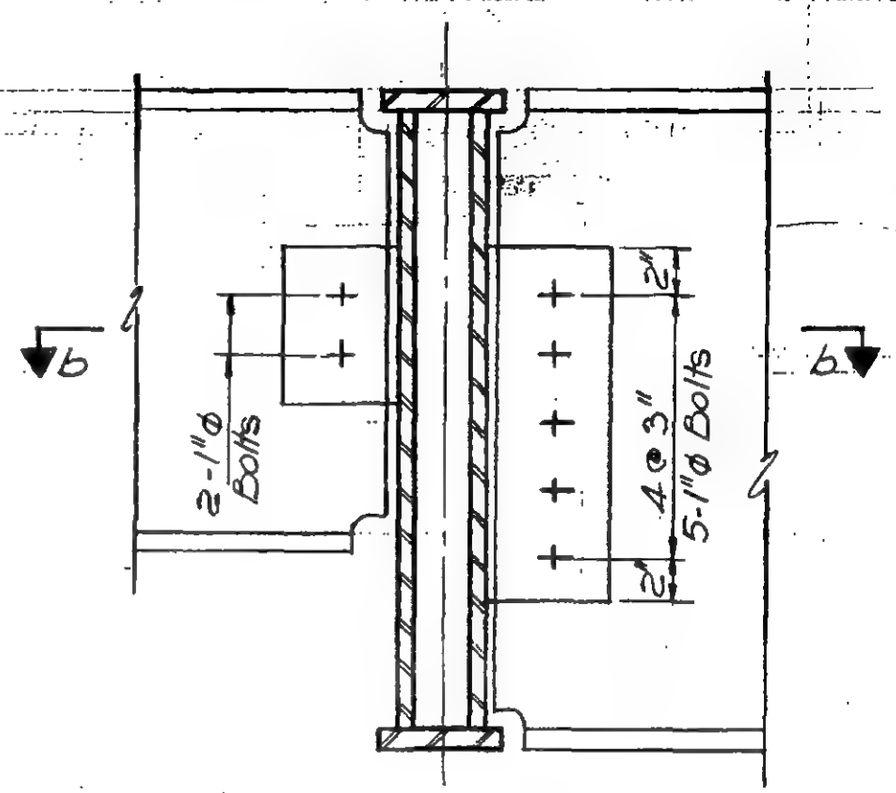

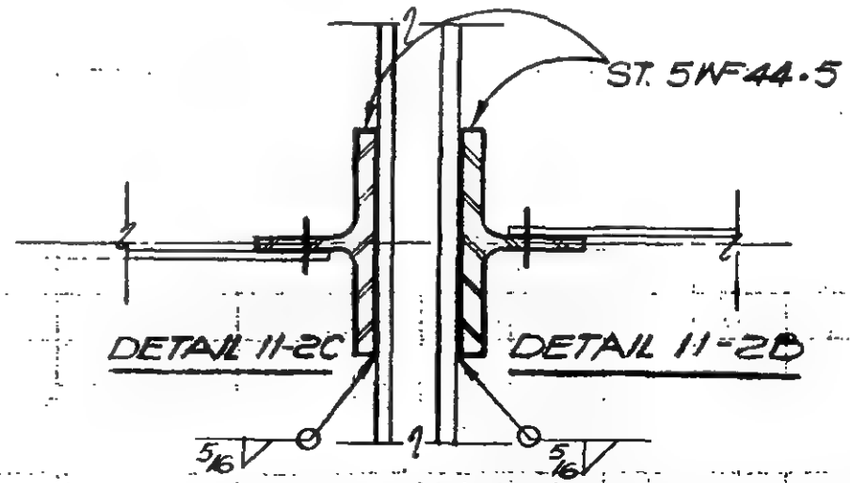

Section b-b

LICENSED PROFESSIONAL ENGINEER — LESLIE E. ROBERTSON — No. 34860 — UNIVERSITY OF THE STATE OF NEW YORK

DESIGNED

DRAWN: W. Clarke

REVIEWED

9-AB11-2

SKILLING, HELLE, CHRISTIANSEN, ROBERTSON — Structural & Civil Engineers

PROJECT: THE WORLD TRADE CENTER | TITLE: FL.107-PH CONNECTION DETAILS-BEAM TO BEAM | DATE: 4-1-70

REVISIONS

5-27-70

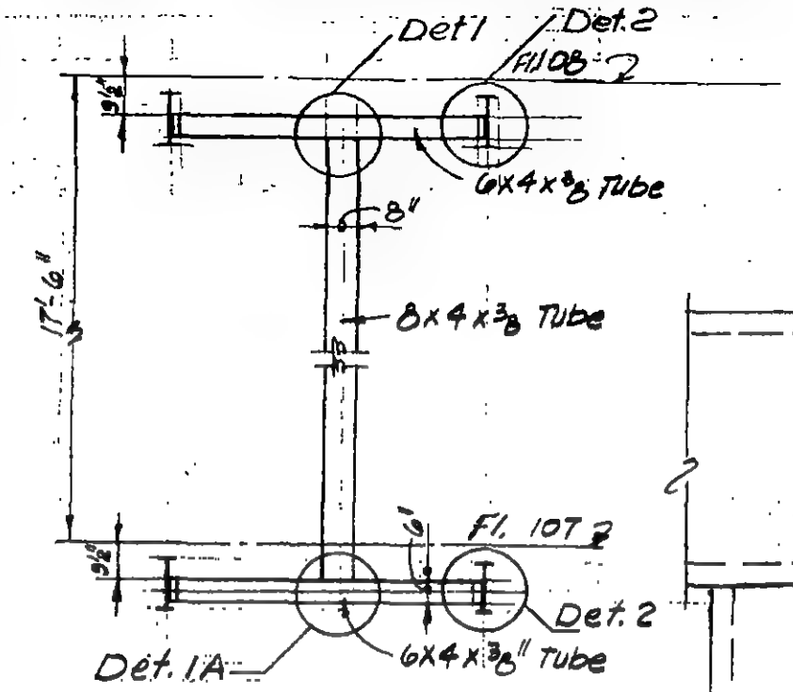

DETAIL 11-3A

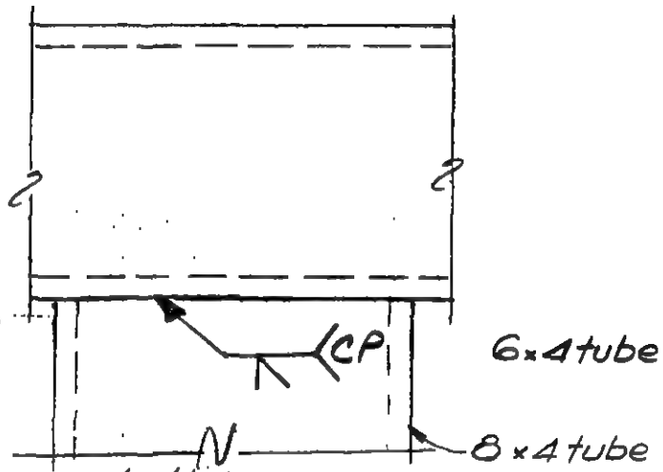

Detail 1 shown
Detail 1A similar

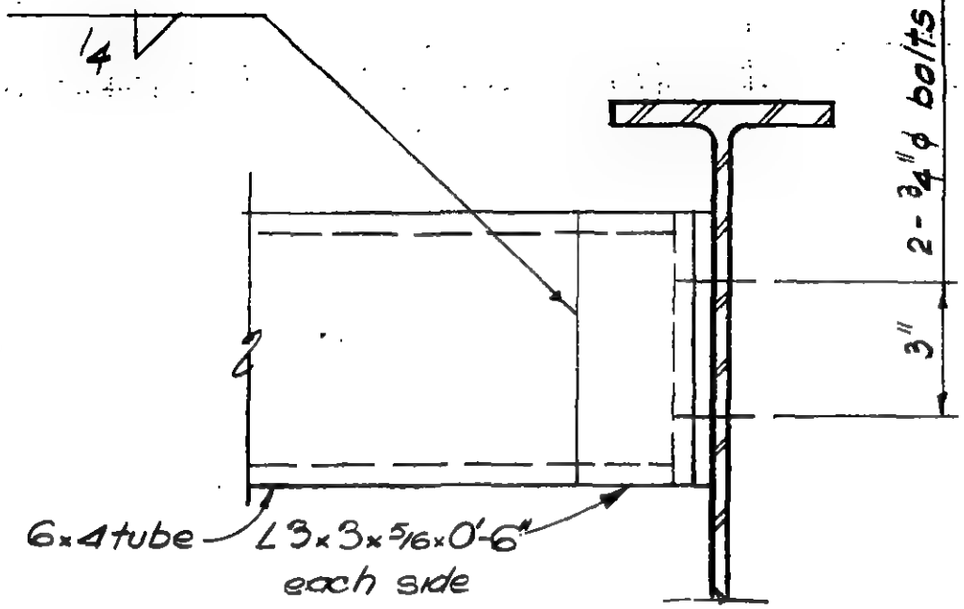

Detail 2

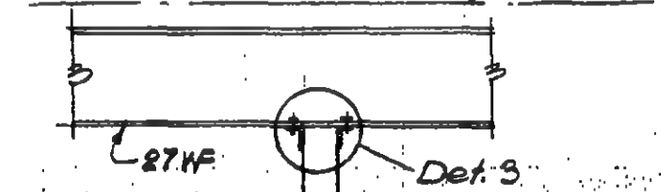

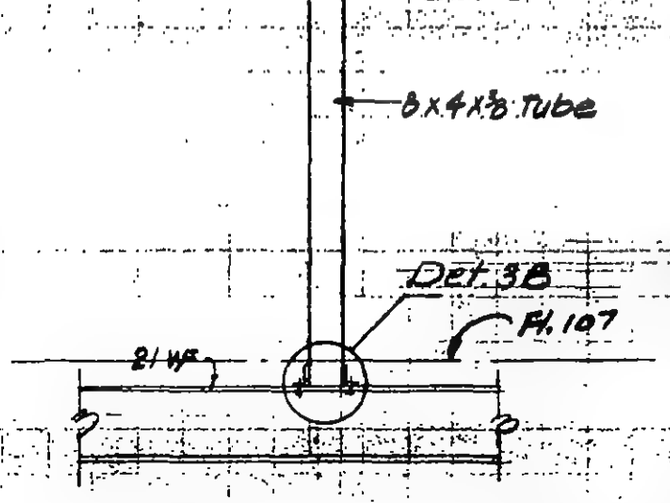

DETAIL 11-3B

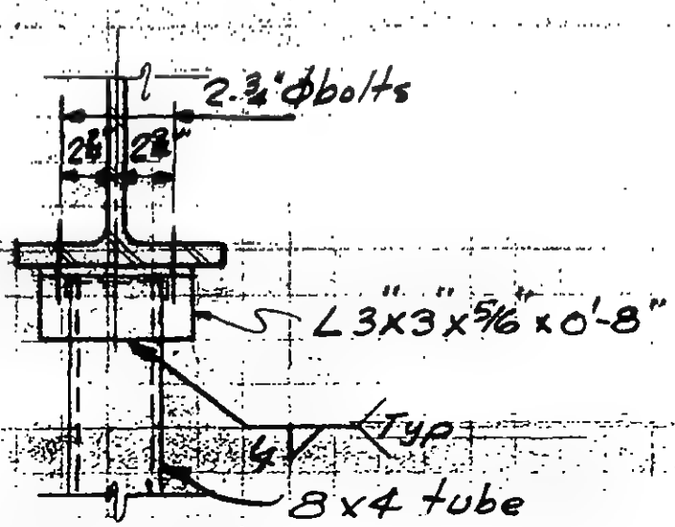

Detail 3
Detail 3B similar

LICENSED PROFESSIONAL ENGINEER
LESLIE E. ROBERTSON
No. 54360
UNIVERSITY OF THE STATE OF NEW YORK

DESIGNED

DRAWN
P.M. Ozaki

REVIEWED

9-AB 11-3

SKILLING, HELLE, CHRISTIANSEN, ROBERTSON — Structural & Civil Engineers

PROJECT: THE WORLD TRADE CENTER

TITLE: FL.107-PH, CONNECTION DETAILS-BEAM TO BEAM

DATE: 4-1-70

REVISIONS

5/27/70
6/17/70

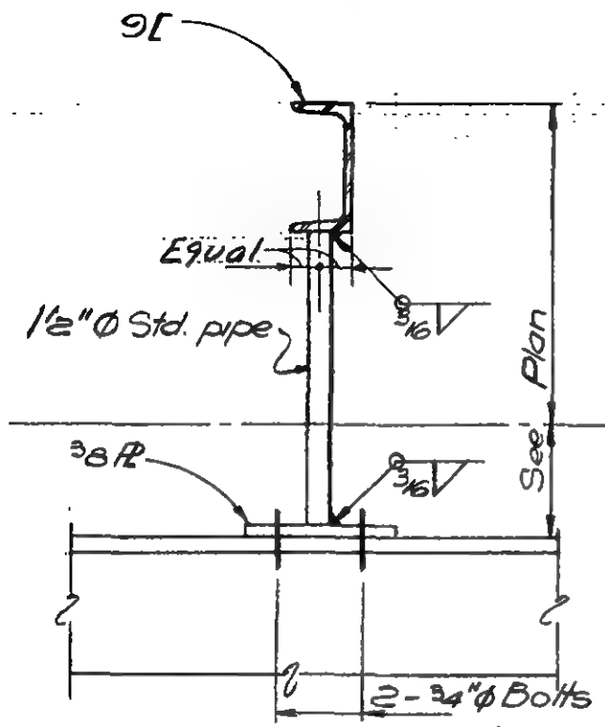

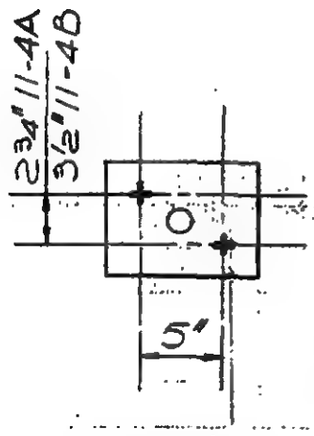

PLAN

DETAIL 11-4A & B

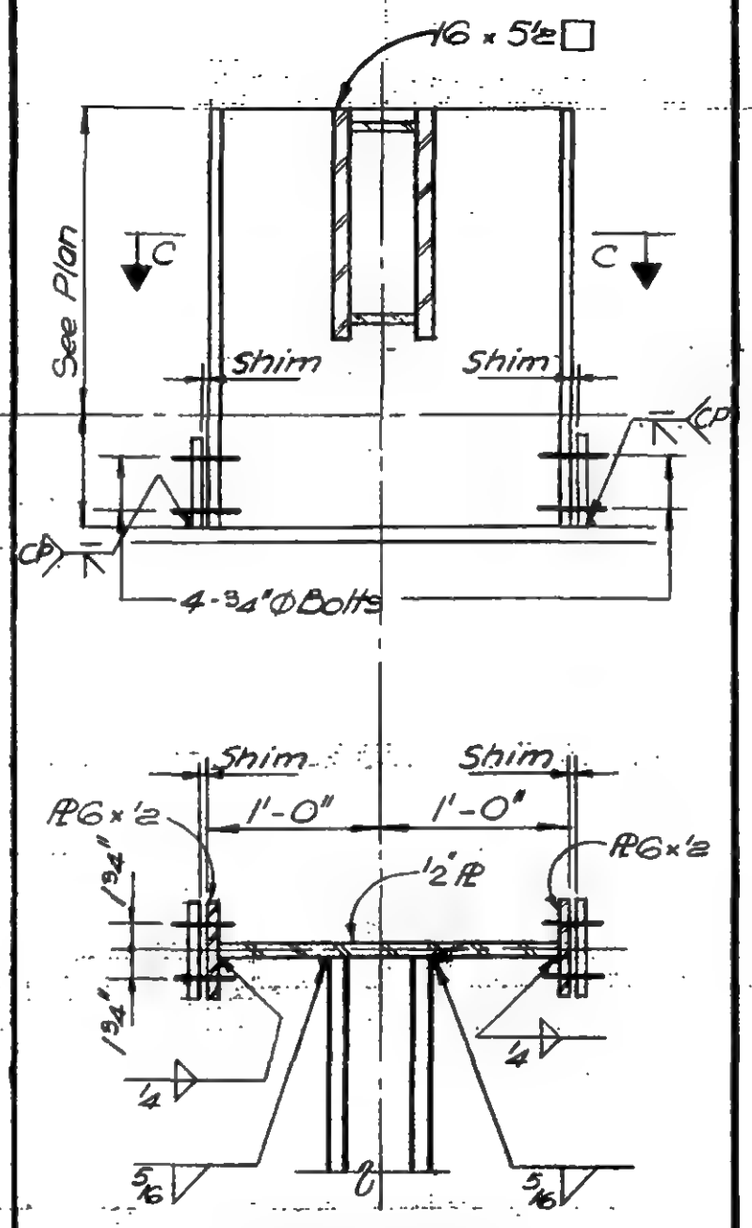

SECTION C-C

DETAIL 11-4C

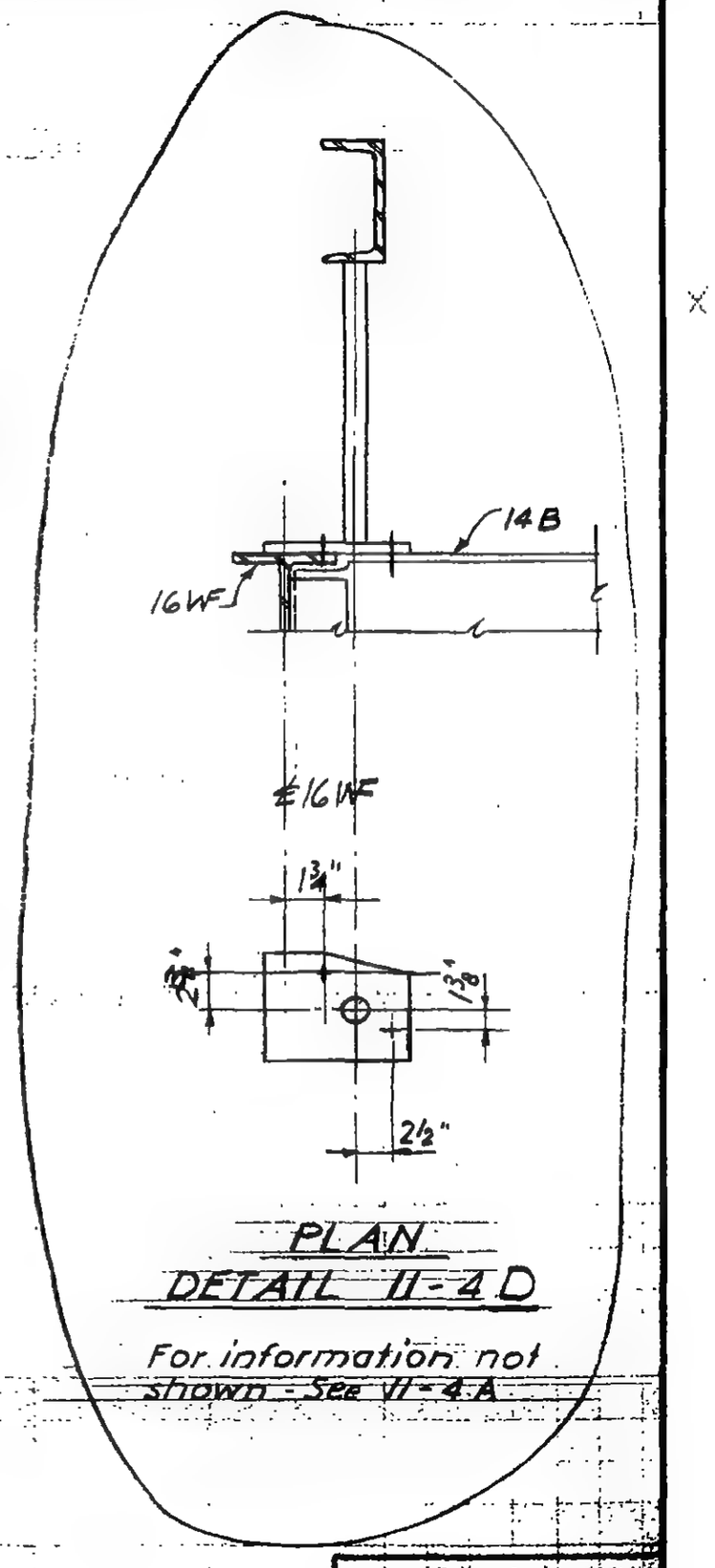

PLAN

DETAIL 11-4D

For information not shown - See 11-4A

LICENSED PROFESSIONAL ENGINEER
LESLIE E. ROBERTSON
No. 34960
UNIVERSITY OF THE STATE OF NEW YORK

DESIGNED

DRAWN
W. Clarke

REVIEWED

9-AB11-4

SKILLING, HELLE, CHRISTIANSEN, ROBERTSON — Structural & Civil Engineers

PROJECT THE WORLD TRADE CENTER | TITLE FL.107-PH.CONNECTION DETAILS-BEAM TO BEAM | DATE 4-1-70

REVISIONS

5/27/70

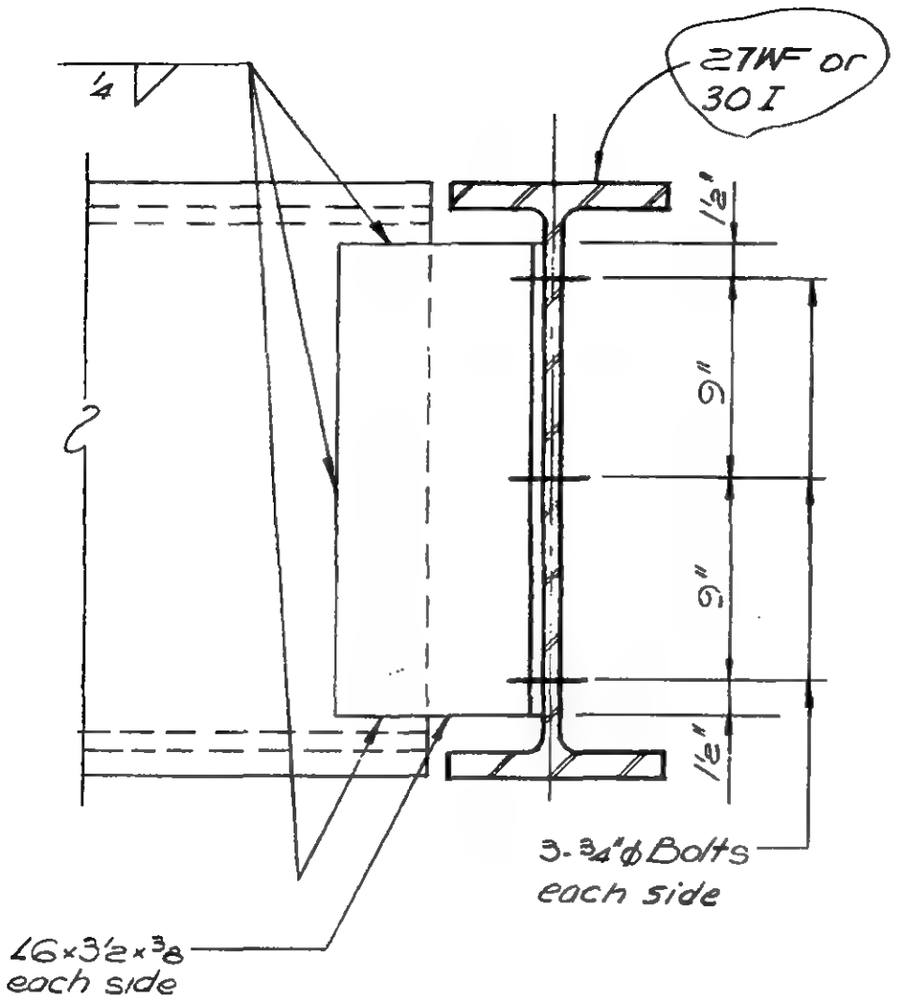

DETAIL 11-5A

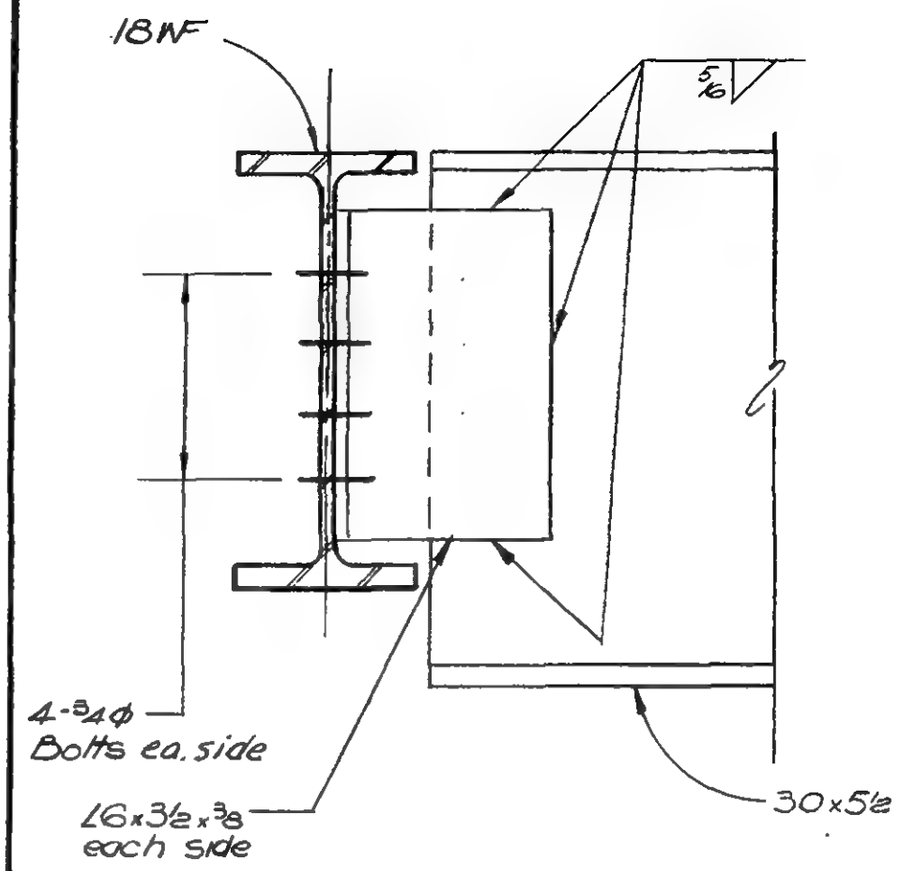

DETAIL 11-5B

LICENSED PROFESSIONAL ENGINEER LESLIE E. ROBERTSON No. 34360 UNIVERSITY OF THE STATE OF NEW YORK

DESIGNED

DRAWN W. Clarke

REVIEWED

9-AB11-5

SKILLING, HELLE, CHRISTIANSEN, ROBERTSON — Structural & Civil Engineers

PROJECT THE WORLD TRADE CENTER | TITLE FL.107-PH CONNECTION DETAILS-BEAM TO BEAM | DATE 4-1-70

REVISIONS

5/27/70

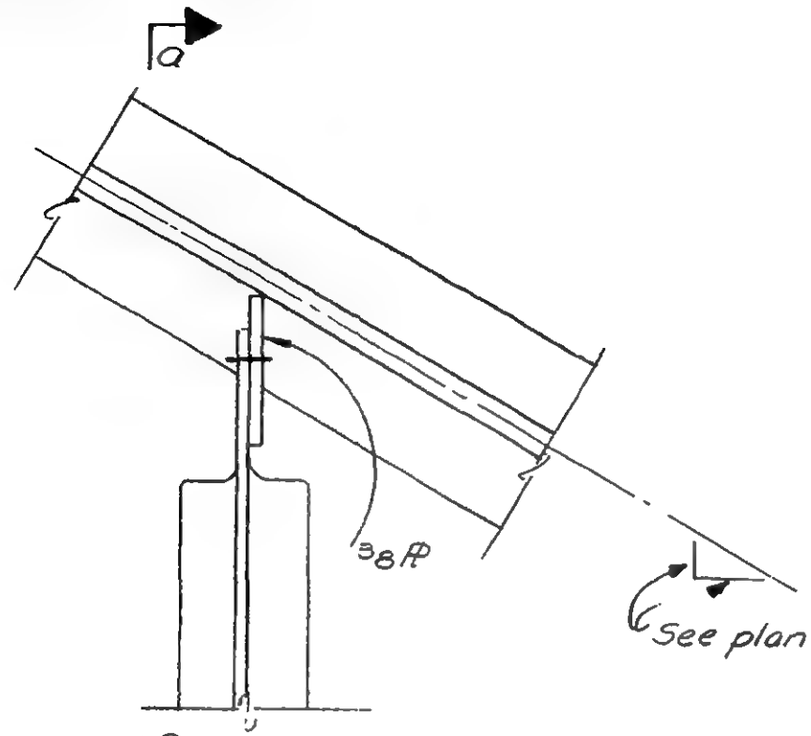

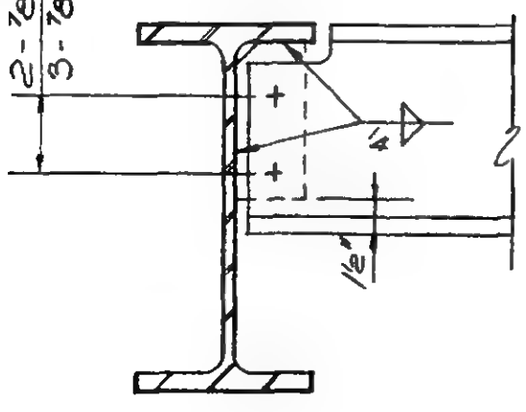

Section a-a

DETAIL 11-6A, B, C & D

LICENSED PROFESSIONAL ENGINEER
LESLIE E. ROBERTSON
No. 34960
UNIVERSITY OF THE STATE OF NEW YORK

DESIGNED

DRAWN
W. Clarke

REVIEWED

9-AB11-6

SKILLING, HELLE, CHRISTIANSEN, ROBERTSON — Structural & Civil Engineers

PROJECT: THE WORLD TRADE CENTER | TITLE: FL.107-PH. CONNECTION DETAILS-BEAM TO BEAM | DATE: 4-1-70

REVISIONS

5-27-70
12-14-70

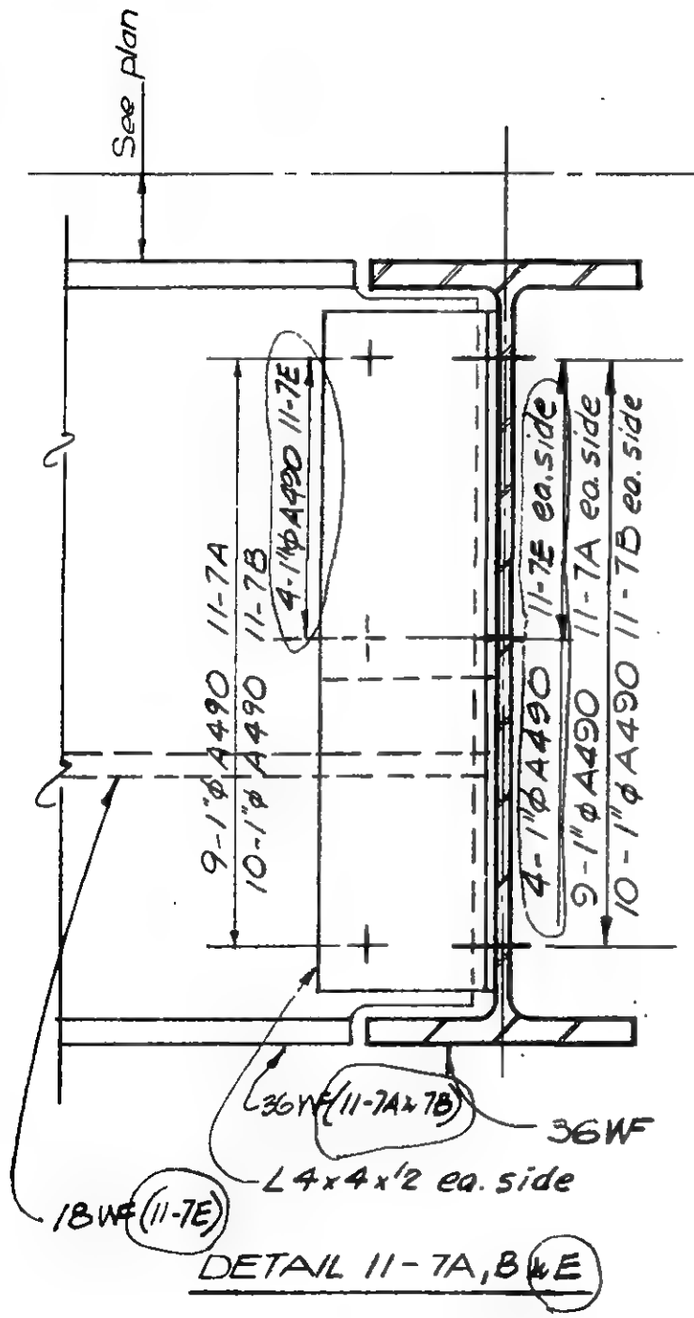

DETAIL 11-7A, B & E

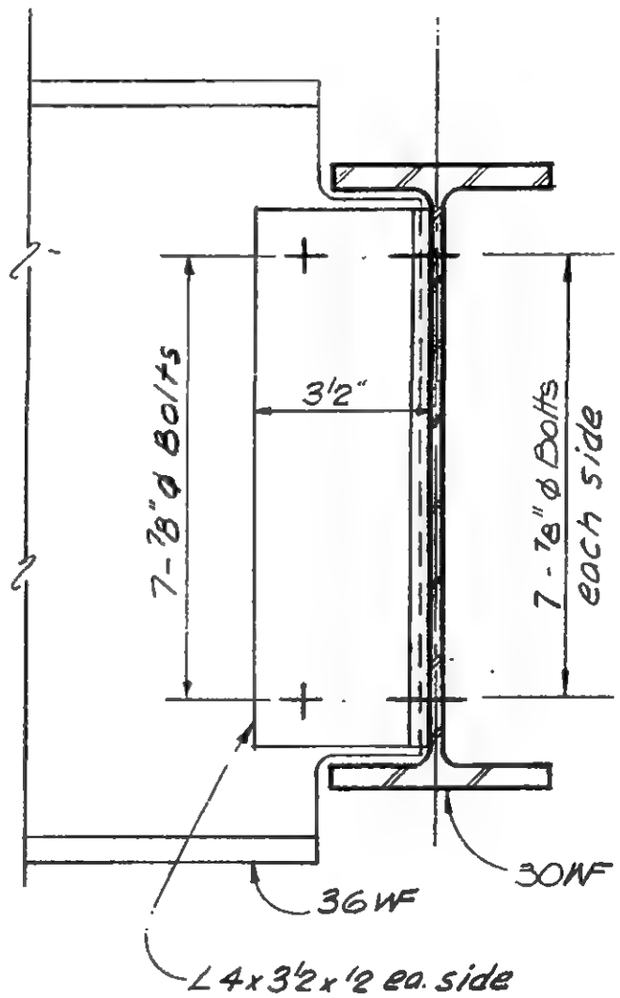

DETAIL 11-7C

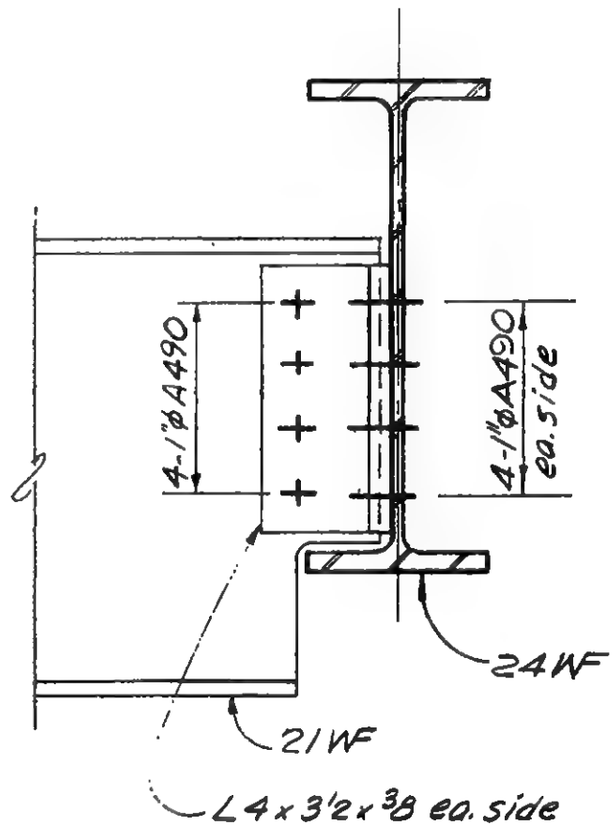

DETAIL 11-7D

LICENSED PROFESSIONAL ENGINEER
LESLIE E. ROBERTSON
No. 34360
UNIVERSITY OF THE STATE OF NEW YORK

DESIGNED

DRAWN
W. Clarke

REVIEWED

9-AB11-7

SKILLING, HELLE, CHRISTIANSEN, ROBERTSON — Structural & Civil Engineers

PROJECT THE WORLD TRADE CENTER | TITLE FL 107-PH CONNECTION DETAILS - FL 110 | DATE 6-15-70

REVISIONS

12-14-70

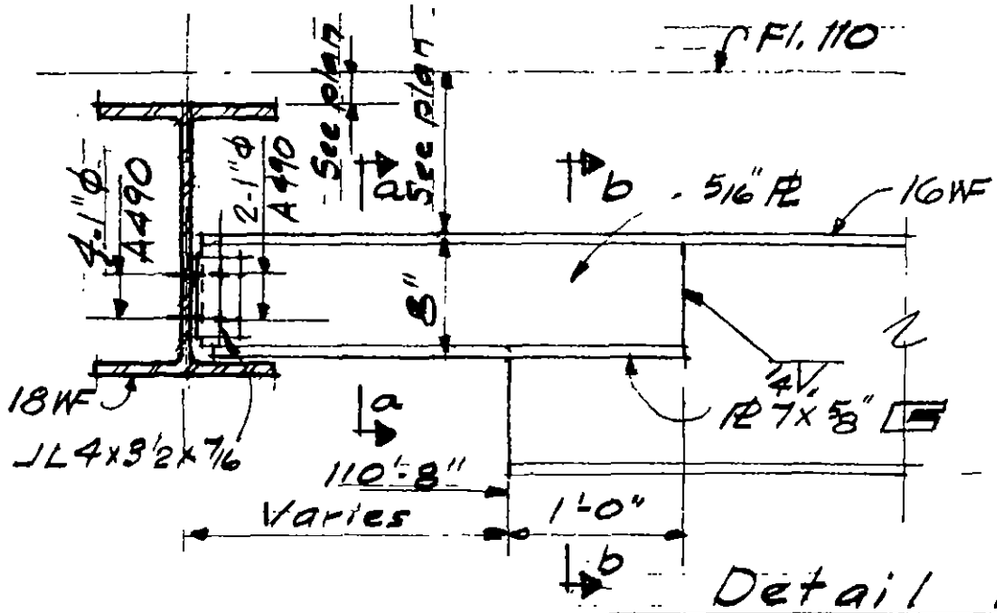

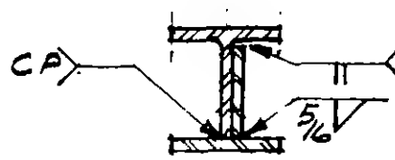

Section a-a

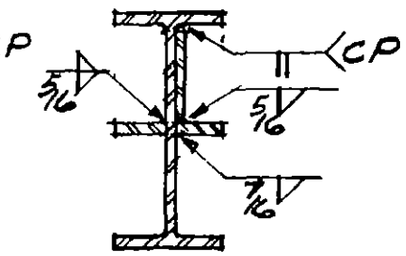

Section b-b

Detail 11-8A

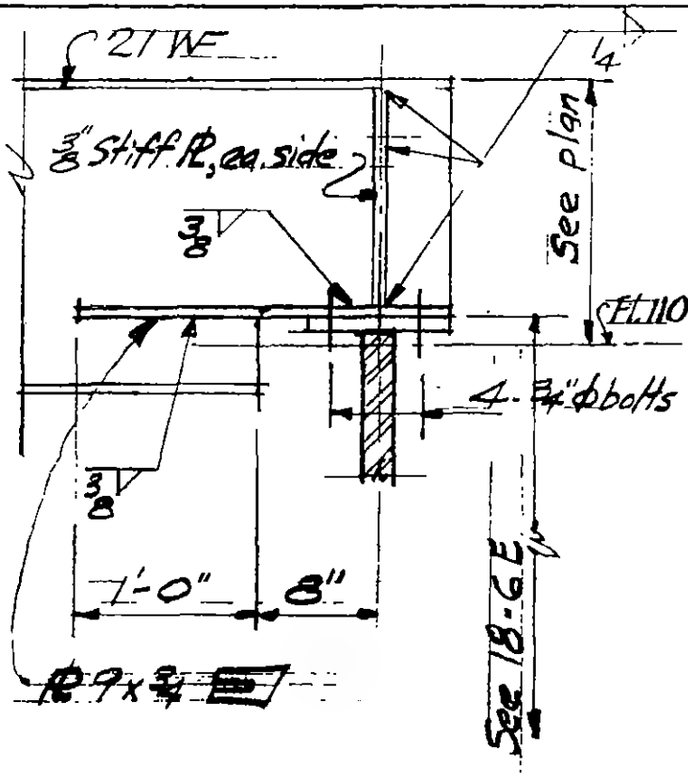

Detail 11-8B

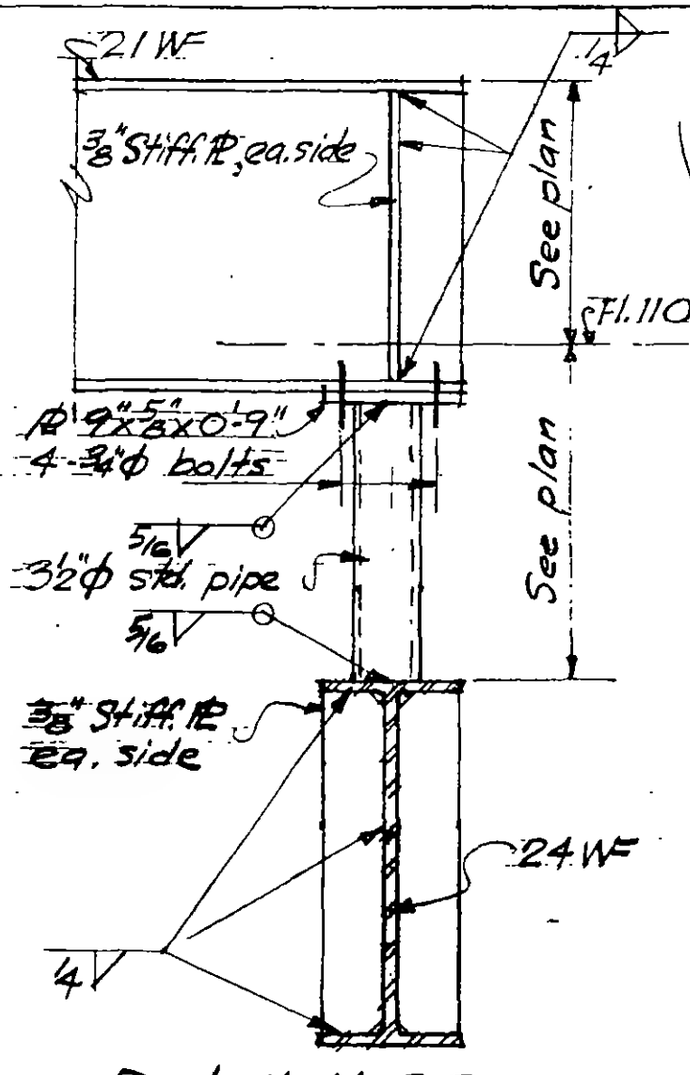

Detail 11-8C

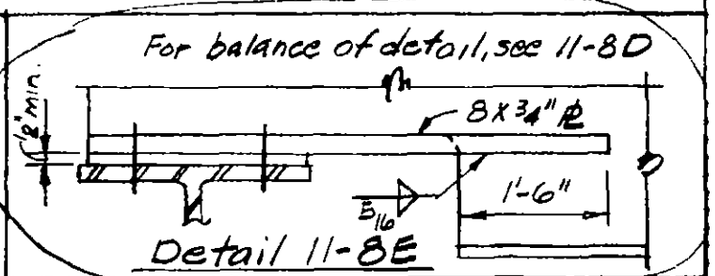

Detail 11-8E

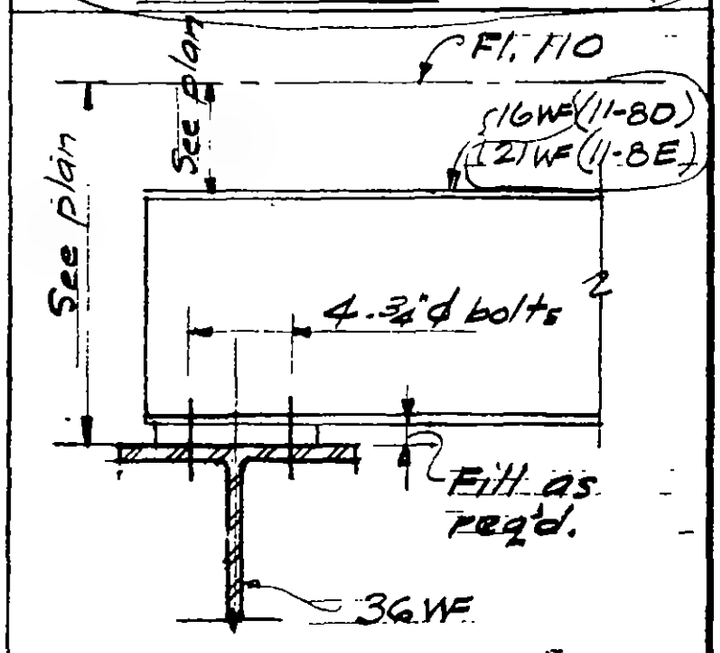

Detail 11-8D

LICENSED PROFESSIONAL ENGINEER — LESLIE E. ROBERTSON — No. 34360 — UNIVERSITY OF THE STATE OF NEW YORK

DESIGNED

DRAWN

REVIEWED

9-AB11-8

SKILLING, HELLE, CHRISTIANSEN, ROBERTSON — Structural & Civil Engineers

PROJECT: THE WORLD TRADE CENTER | TITLE: FL.107 - PH CONNECTION DETAILS FL. 107 | DATE: 6-17-70

REVISIONS

7/8/70

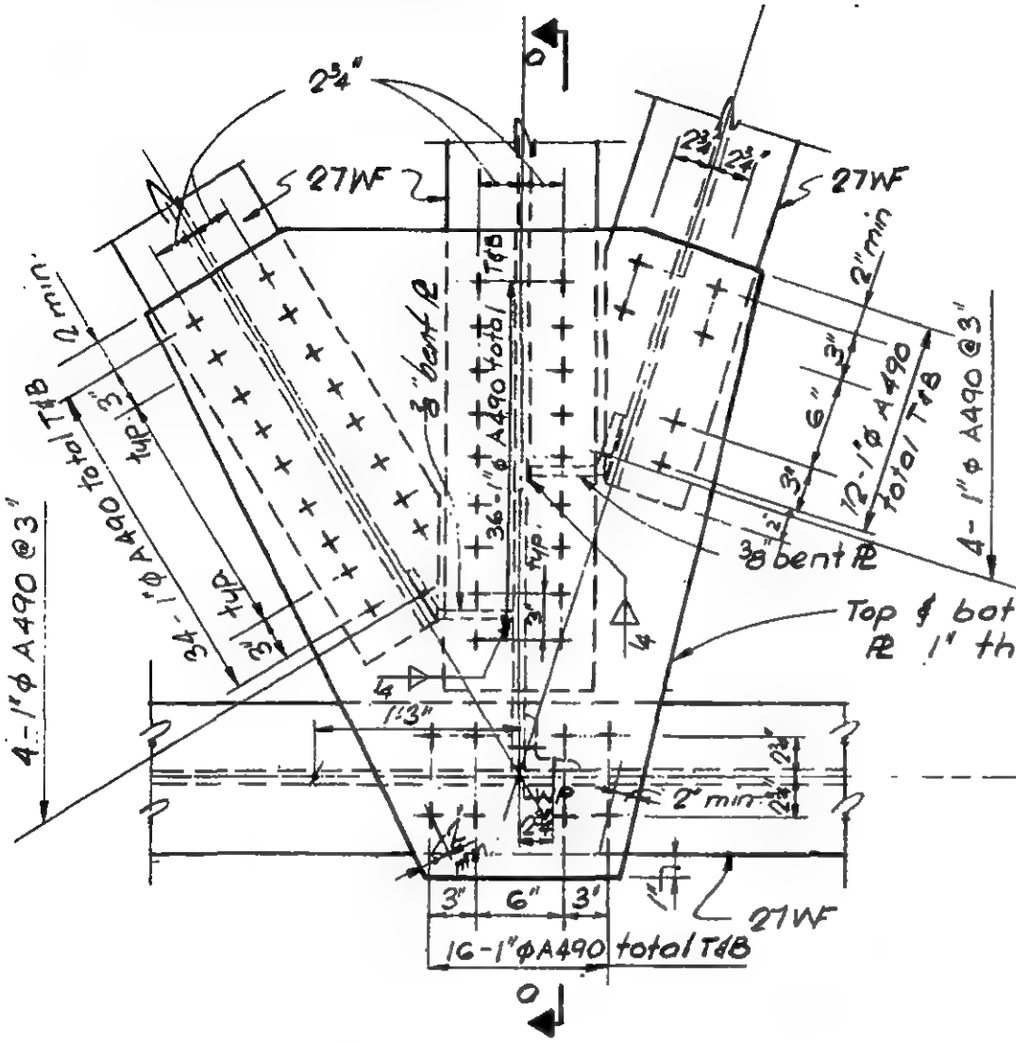

Detail 11-9A

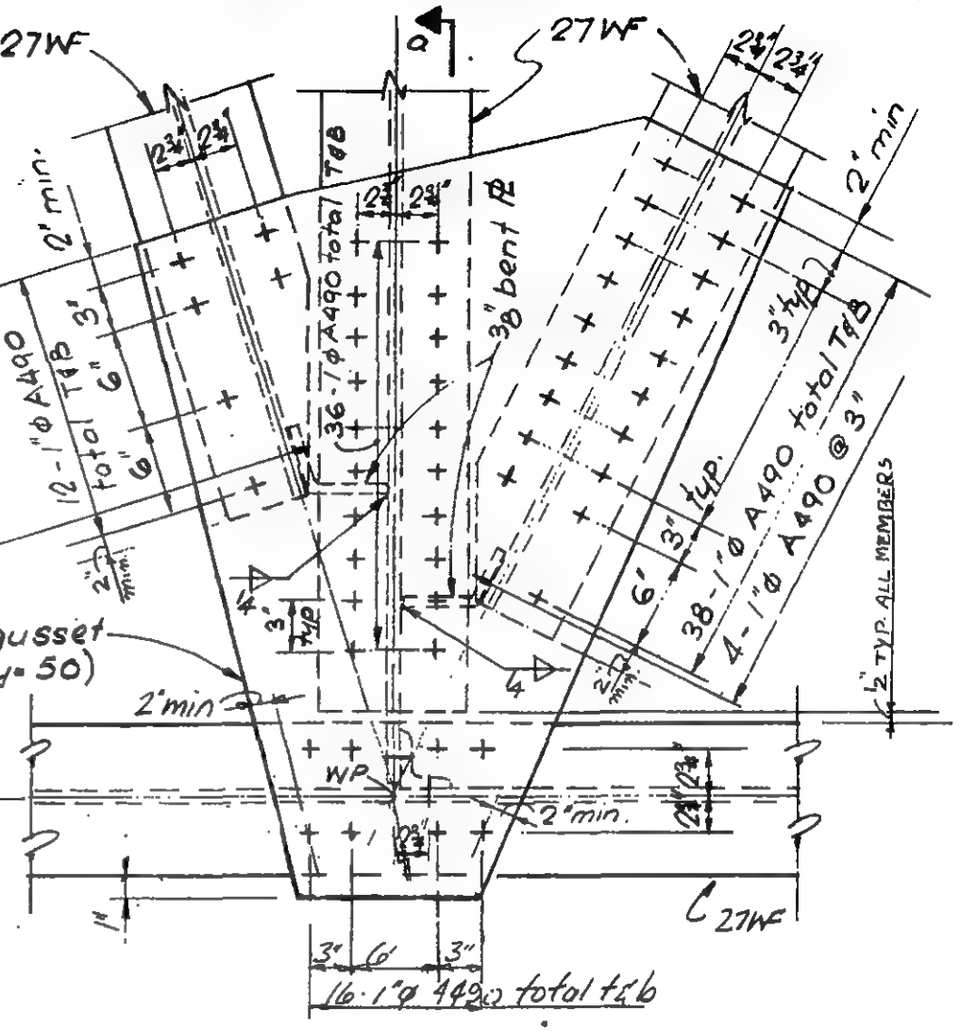

Detail 11-9B

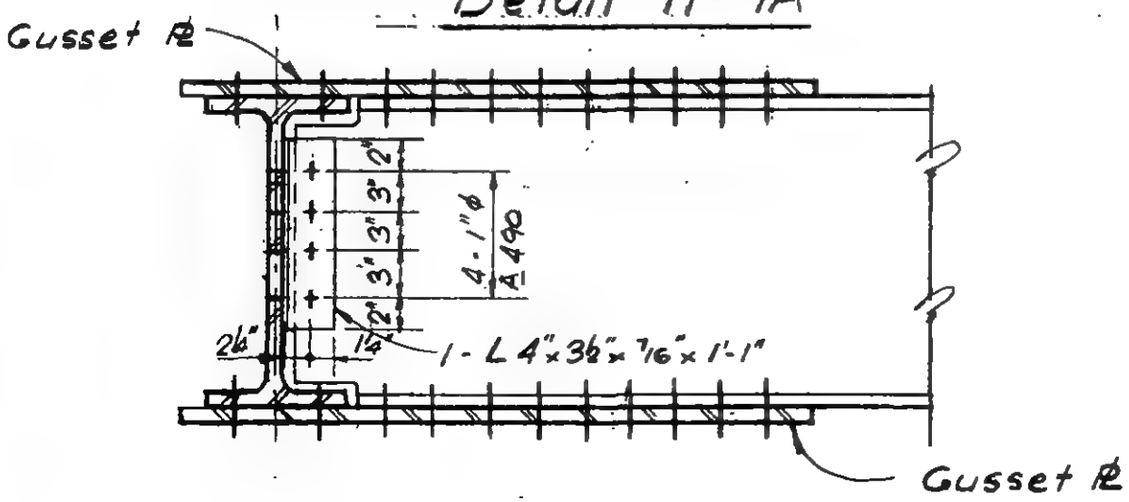

Section a-a

4/3/72
In Process

LICENSED PROFESSIONAL ENGINEER
LESLIE E. ROBERTSON
No. 34960
UNIVERSITY OF THE STATE OF NEW YORK

DESIGNED M. Romani
DRAWN T. Terrelonge
REVIEWED

9-AB11-9.1

SKILLING, HELLE, CHRISTIANSEN, ROBERTSON — Structural & Civil Engineers

PROJECT THE WORLD TRADE CENTER | TITLE FL 107 - PH CONNECTION DETAILS - FL 107 | DATE 6-17-70

REVISIONS

7/8/70

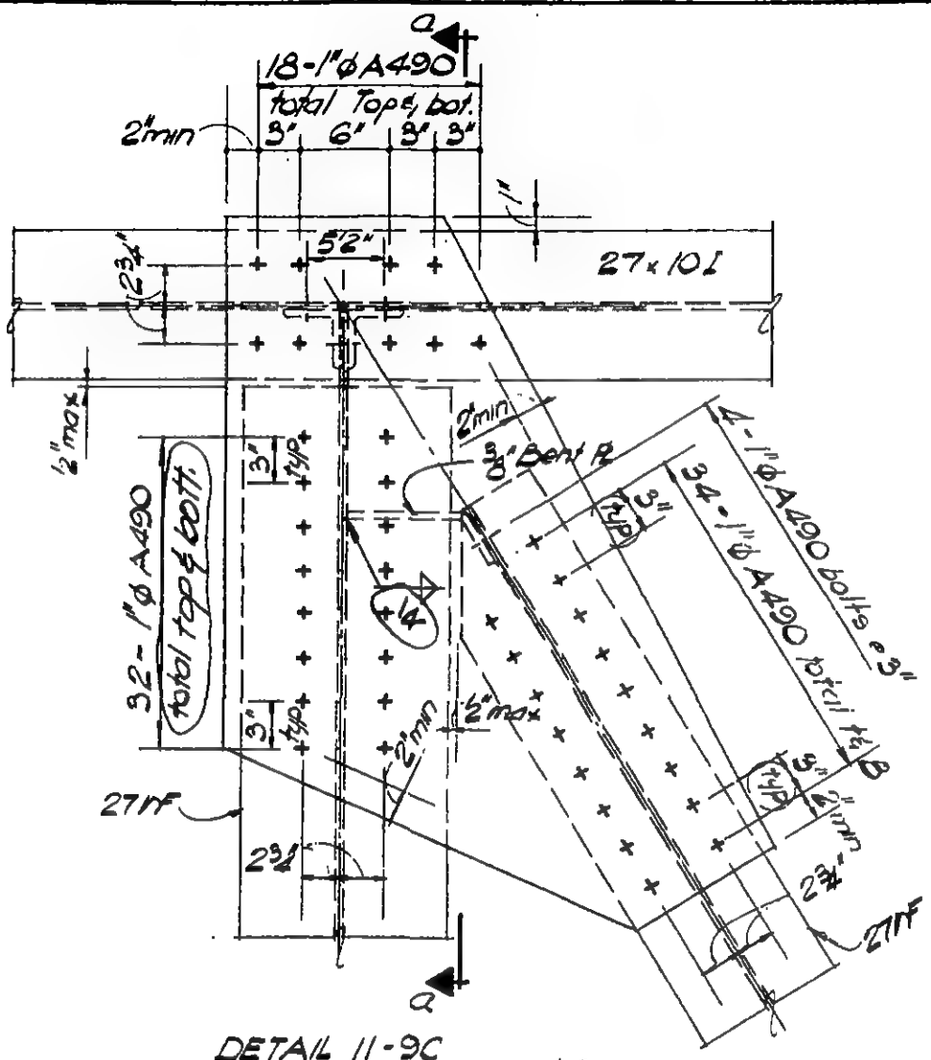

DETAIL 11-9C

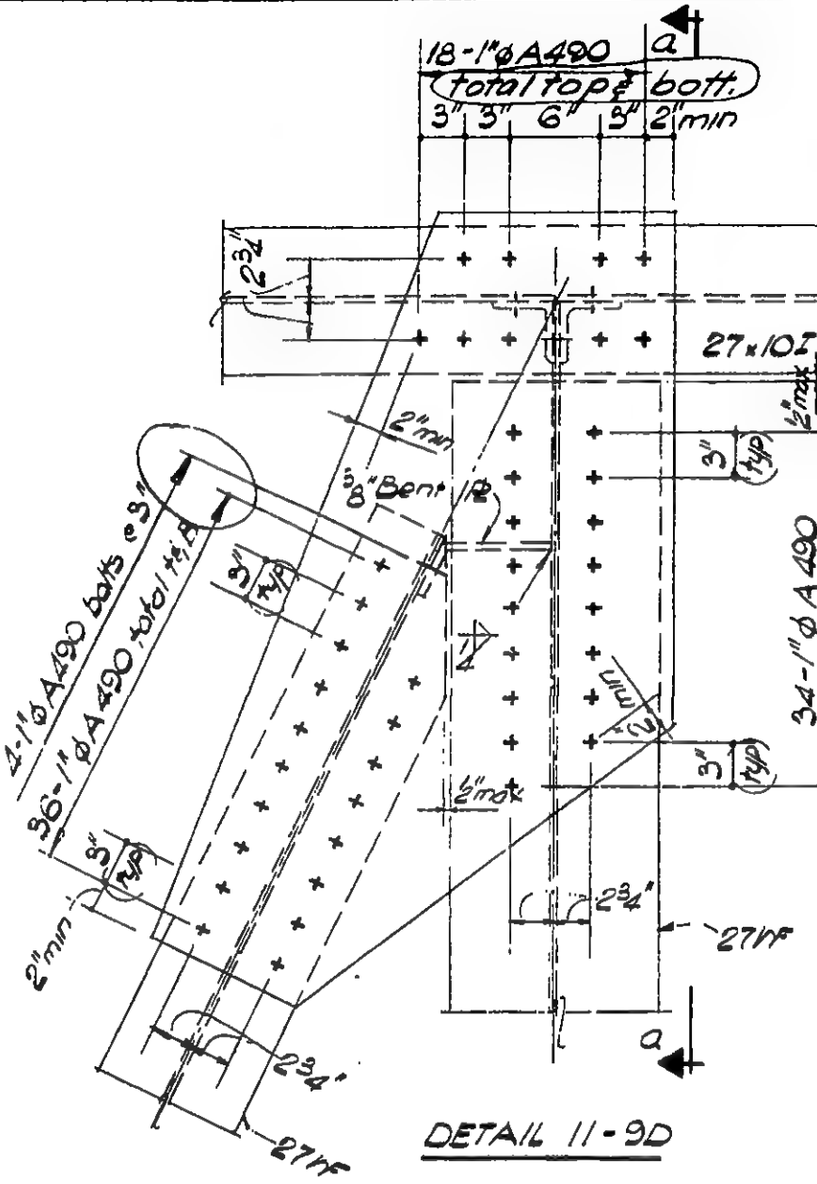

DETAIL 11-9D

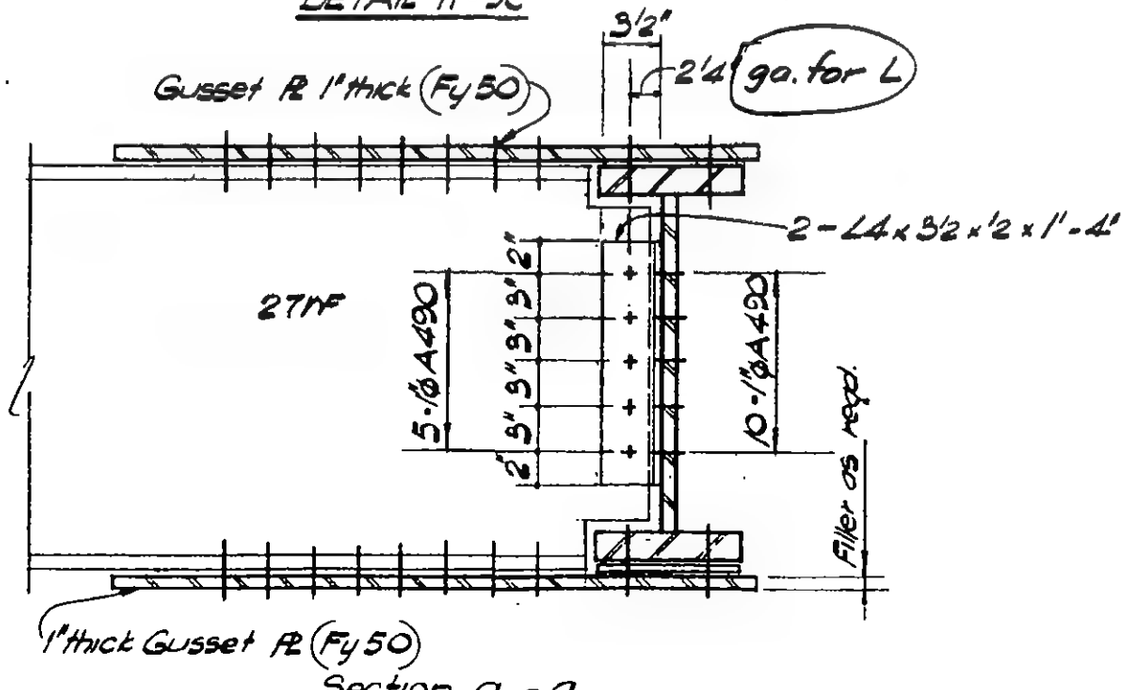

Section a - a

LICENSED PROFESSIONAL ENGINEER
LESLIE E. ROBERTSON
No 34960
UNIVERSITY OF THE STATE OF NEW YORK

DESIGNED

DRAWN

REVIEWED

9-AB11-9.2

SKILLING, HELLE, CHRISTIANSEN, ROBERTSON — Structural & Civil Engineers

PROJECT THE WORLD TRADE CENTER | TITLE FL. 107-PH CORE COLUMN . SPLICE DETAILS | DATE 4-1-70

REVISIONS

5-27-70

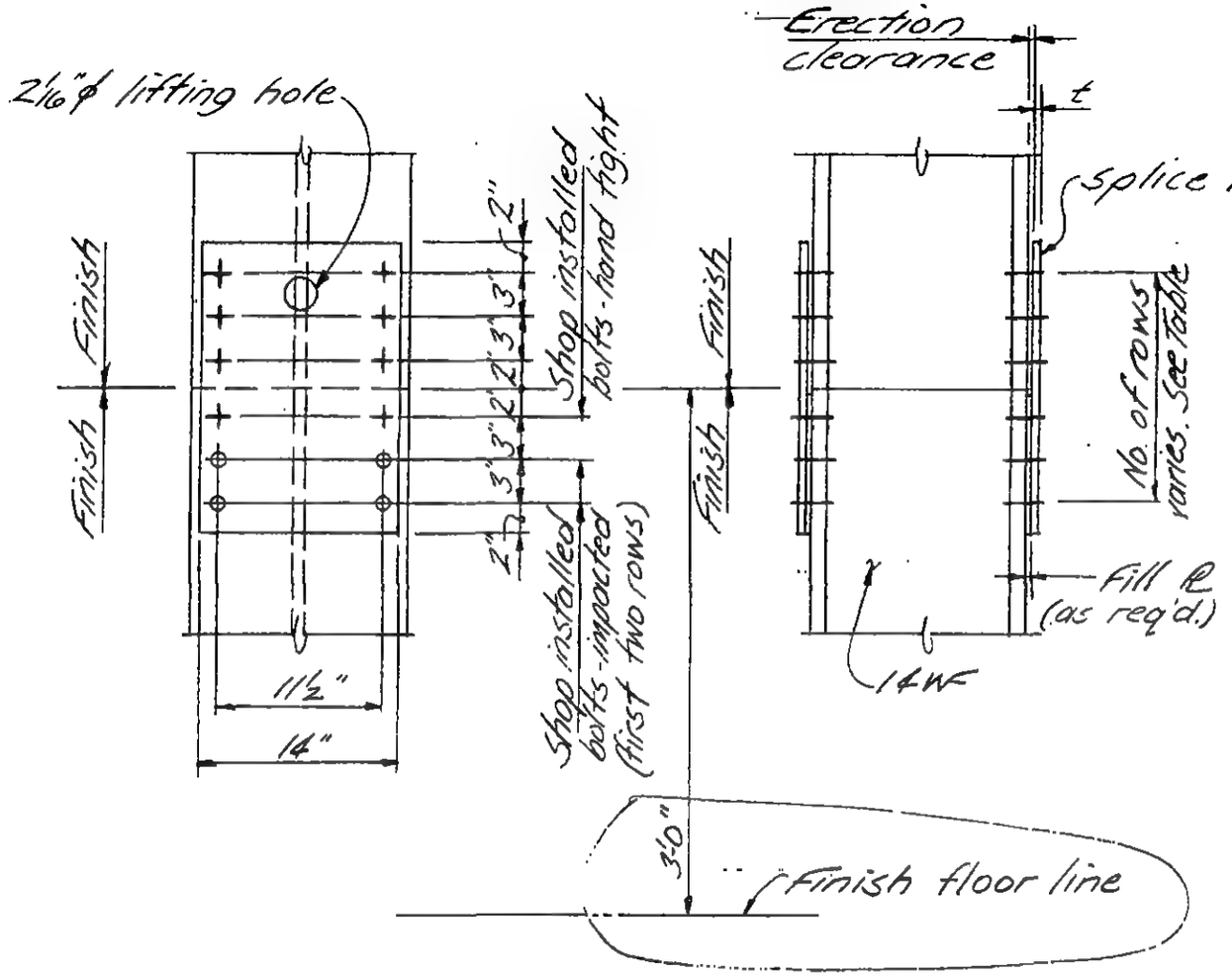

Elevation

SPLICE DETAIL	NO. & SIZE OF BOLTS PER SPICE ℓ	SPLICE PLATE THICKNESS (t)	NO. OF ROWS
12-1A	12-⅞"ϕ	⅝	6
12-1B	16-⅞"ϕ	¾	8
12-1C	20-⅞"ϕ	⅞	10

Notes:
1. All splice plates Fy 36
2. All bolts are friction type, A490.
3. All holes in columns and splice plates are 1/16" larger than nominal bolt diameter.

LICENSED PROFESSIONAL ENGINEER — LESLIE E. ROBERTSON — No. 34960 — UNIVERSITY OF THE STATE OF NEW YORK

DESIGNED A. Patel

DRAWN J. Adams

REVIEWED E. Drakos

9-AB12-1

SKILLING, HELLE, CHRISTIANSEN, ROBERTSON — Structural & Civil Engineers

PROJECT THE WORLD TRADE CENTER | TITLE FL. 107-PH CORE COLUMN SPLICE DETAILS | DATE 4-1-70

REVISIONS

5-27-70

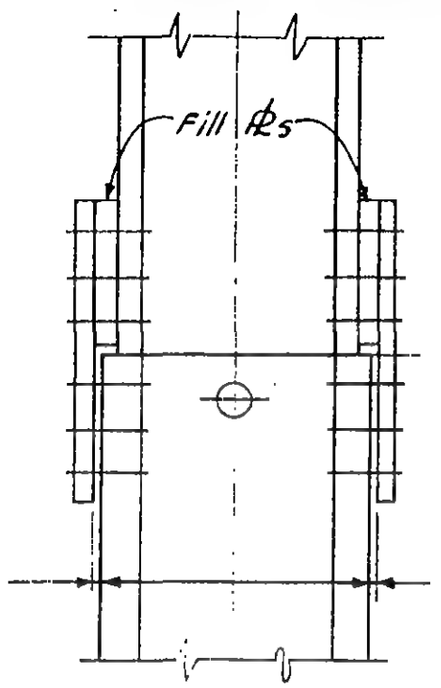

Detail 12-2A

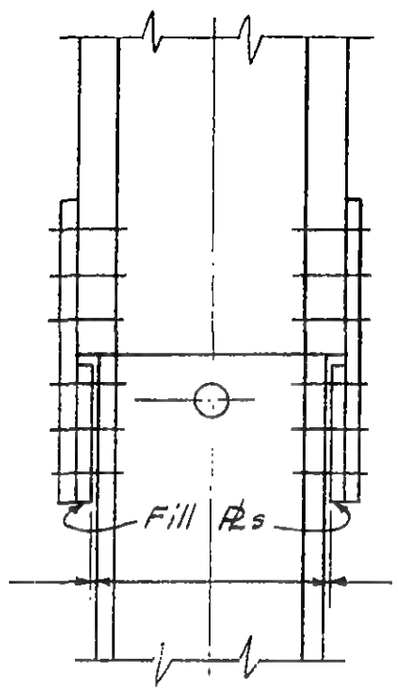

Detail 12-2B

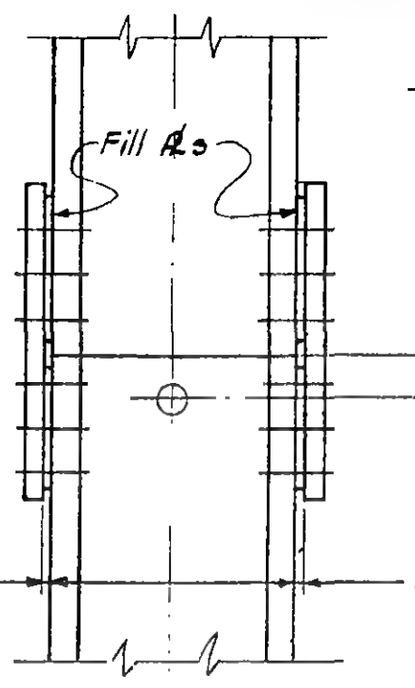

Detail 12-2D

Provide upper columns, all fill ℄, shims, bolts, & wshrs. For lower cols. See Dwg Book 3

2½c" ϕ lifting hole if splice ℄ shop-installed on upper columns.

Erection clearance. Shim as req'd typ all d'tls. Details shown are for splice ℄ shop-installed on upper cols. If splice ℄s are shop-installed on lower cols. provide similar erection clearance & shim @ upper columns. Shim shall be ⅛" min to ⅜" max total thickness each face

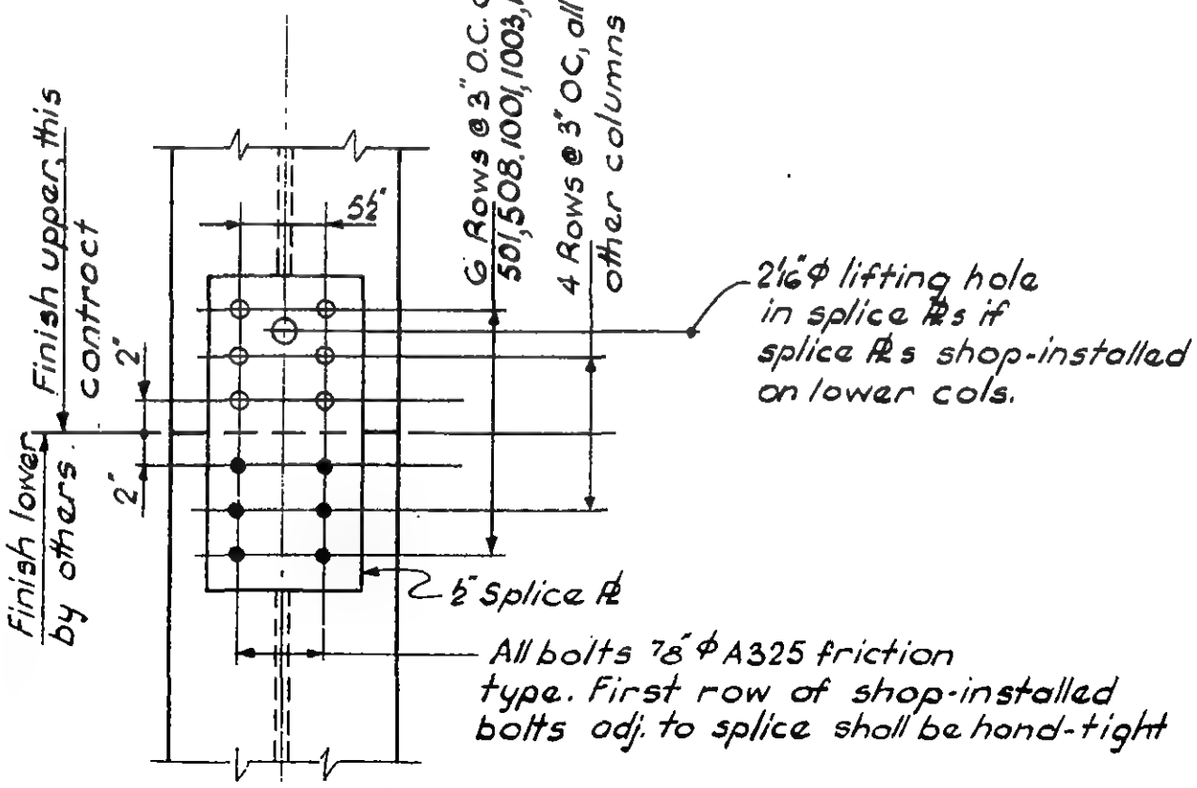

Typical Elevation
Details 12-2A, B & D

LICENSED PROFESSIONAL ENGINEER — LESLIE E. ROBERTSON — No. 34360 — UNIVERSITY OF THE STATE OF NEW YORK

DESIGNED

DRAWN D. Huggins

REVIEWED

9-AB12-2

SKILLING, HELLE, CHRISTIANSEN, ROBERTSON — Structural & Civil Engineers

PROJECT THE WORLD TRADE CENTER | TITLE FL. 107-PH COLUMN BASE DETAILS | DATE 4-1-70

REVISIONS

6/15/70
12-14-70

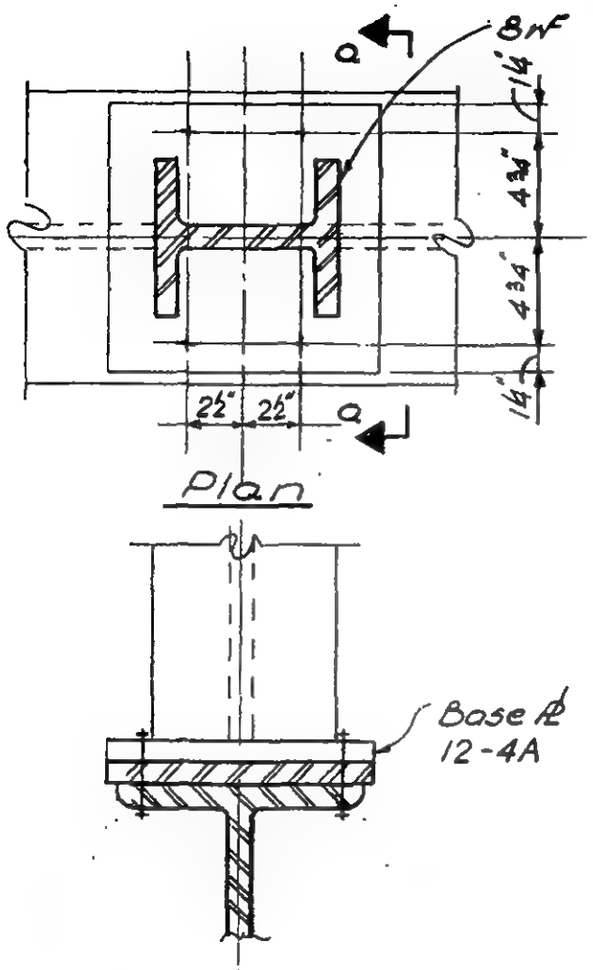

Plan

Section a-a
DETAIL 12-3A

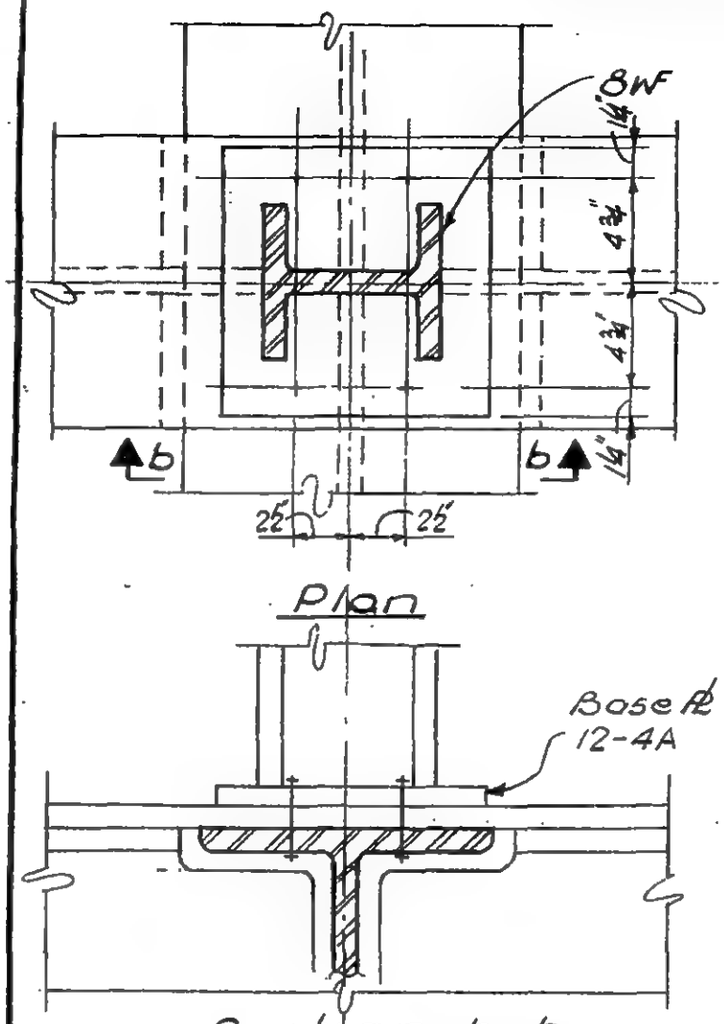

Plan

Section b-b
DETAIL 12-3B

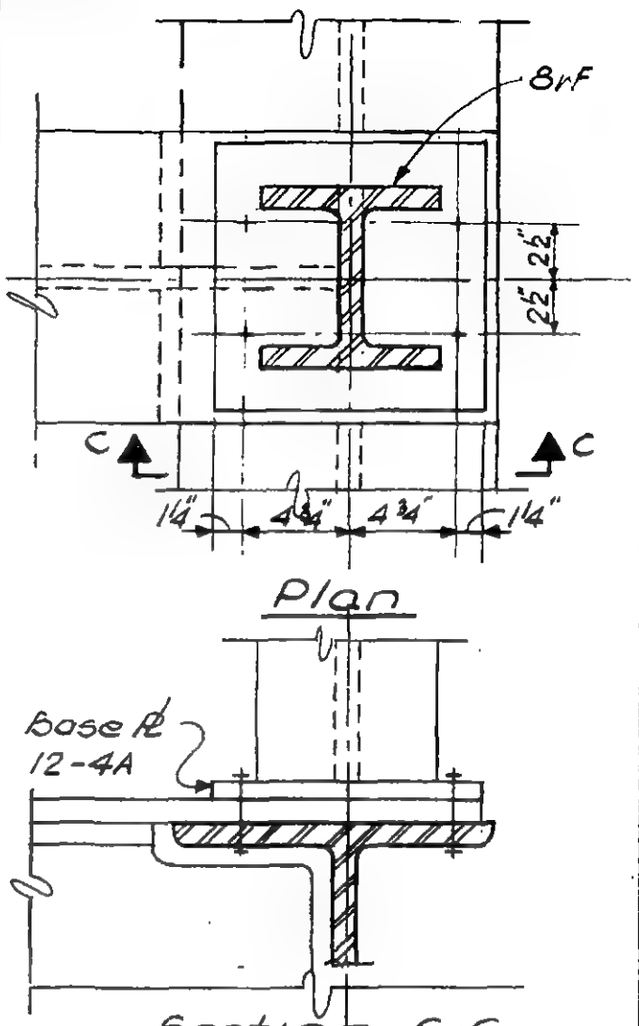

Plan

Section c-c
DETAIL 12-3C

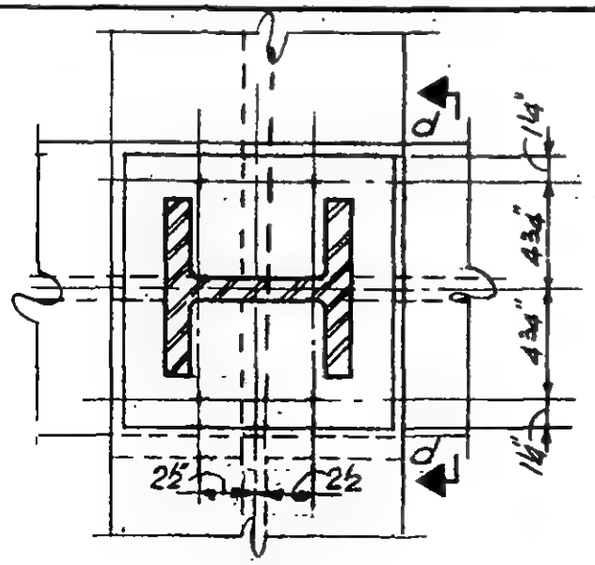

Plan

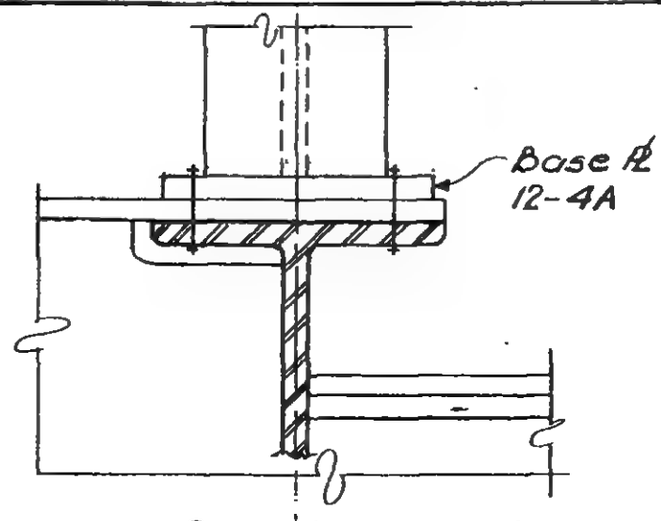

Section d-d
DETAIL 12-3D

Notes:
1. For bolts see 8-5

LICENSED PROFESSIONAL ENGINEER
LESLIE E. ROBERTSON
No. 34360
UNIVERSITY OF THE STATE OF NEW YORK

DESIGNED

DRAWN
D. Huggins

REVIEWED

9-AB12-3.1

SKILLING, HELLE, CHRISTIANSEN, ROBERTSON — Structural & Civil Engineers

PROJECT: THE WORLD TRADE CENTER | TITLE: FL 107 - PH COLUMN BASE DETAILS | DATE: 12-14-70

REVISIONS

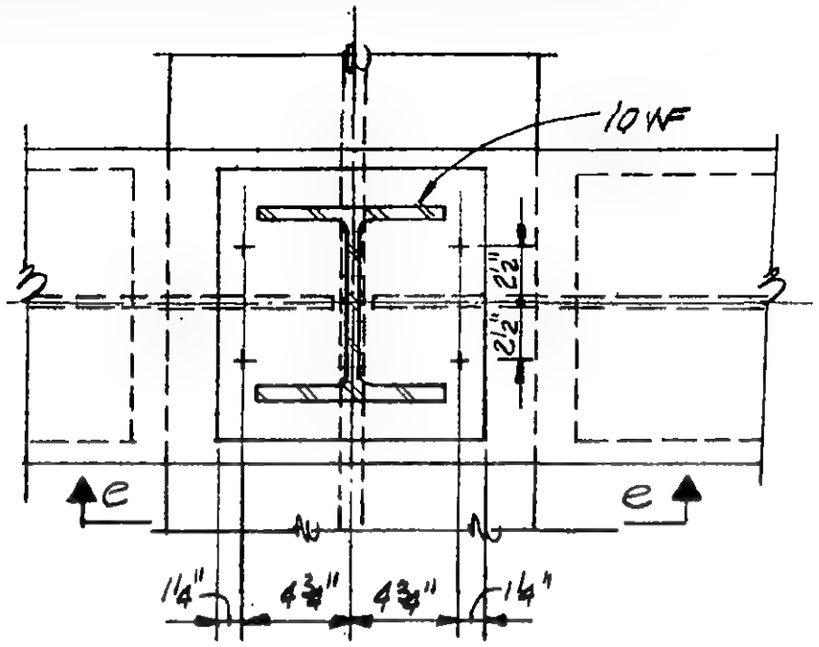

Plan

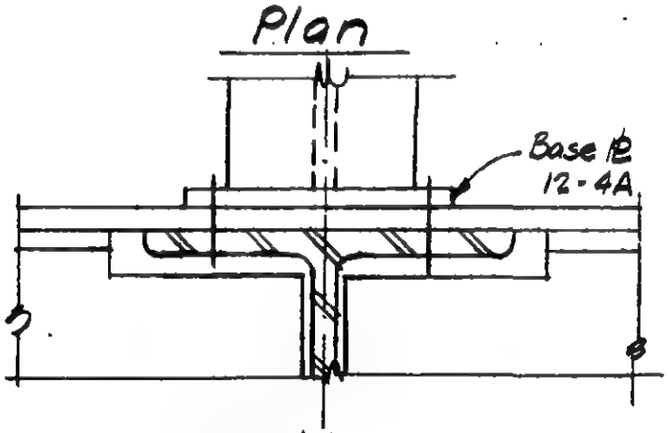

Section e-e

DETAIL 12-3E

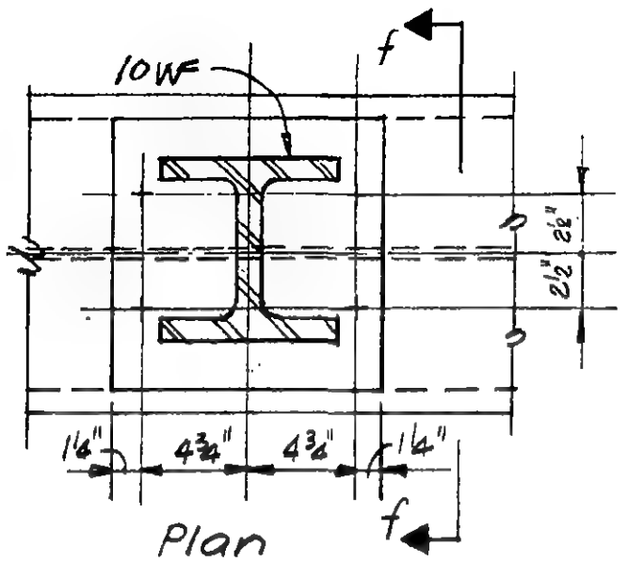

Plan

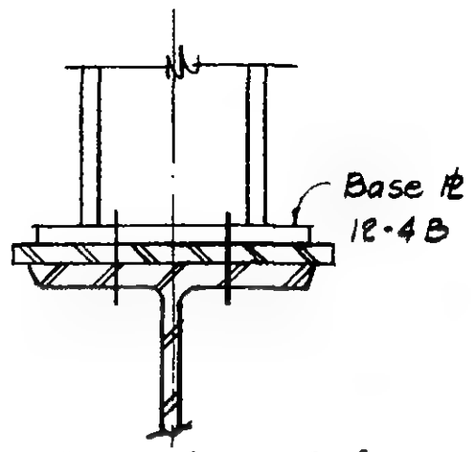

Section f-f

DETAIL 12-3F

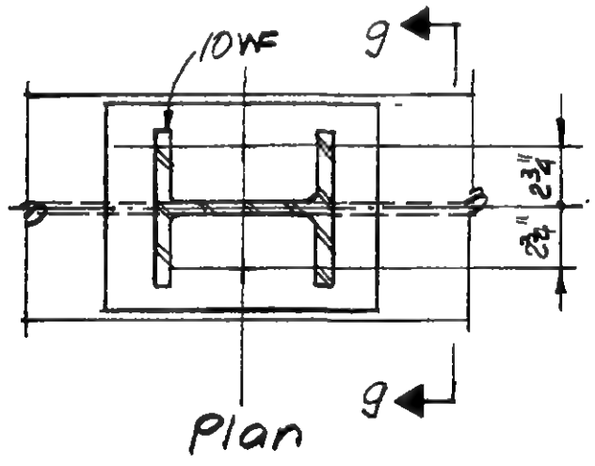

Plan

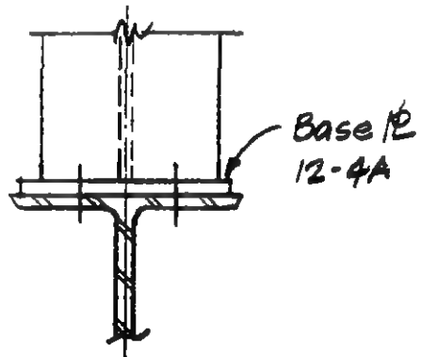

Section g-g

DETAIL 12-3G

Note: All bolts ¾" ϕ

LICENSED PROFESSIONAL ENGINEER — LESLIE E. ROBERTSON — No. 34360 — UNIVERSITY OF THE STATE OF NEW YORK

DESIGNED

DRAWN

REVIEWED

9-812-3.2

SKILLING, HELLE, CHRISTIANSEN, ROBERTSON — Structural & Civil Engineers

PROJECT: THE WORLD TRADE CENTER | TITLE: AL 107-PH TYPICAL CAP AND BASE PLATE DETAILS | DATE: 5-27-70

REVISIONS

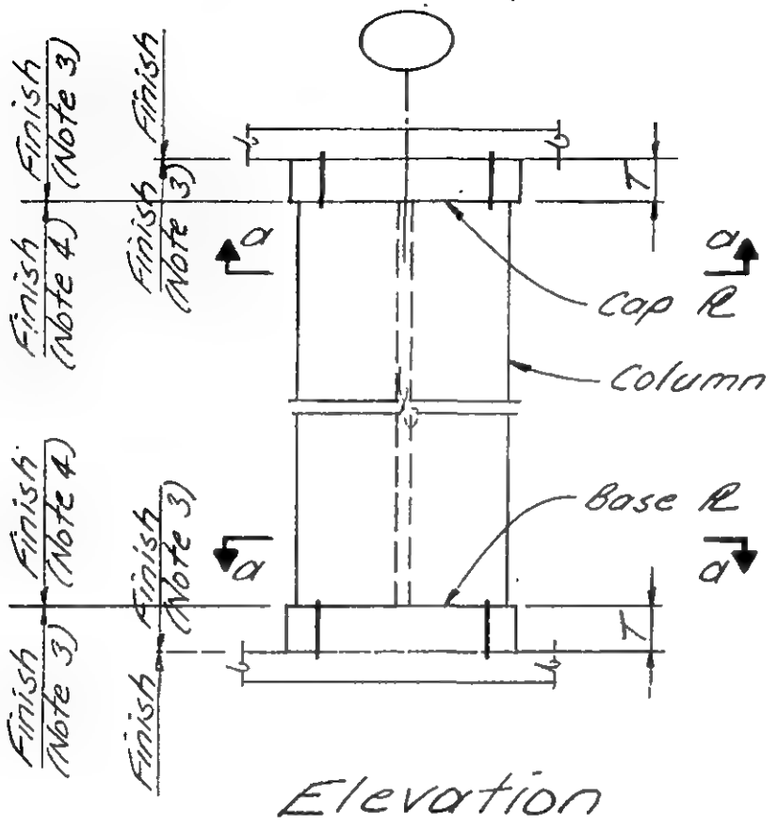

Elevation

SCHEDULE			
TYPE	THICKNESS (T)	WELD 1	REMARKS
12-4A	1"	5/16	
12-4B	2"	3/8	
12-4C	3"	1/2	
12-4D	4"	1/2	
12-4E	5"	5/8	
12-4F	6"	3/4	

Notes:
1. Bolts shall be spread as far as practical.
2. $B \geq b + \frac{1}{2}"$; $D \geq d + 2(\text{Weld 1}) + \frac{1}{2}"$.
3. Base and cap plates shall be finished in accordance with AISC 1.21.3 provisions.
4. Column ends shall be saw-cut.
5. Base and cap plates shall be free of internal gross discontinuities.

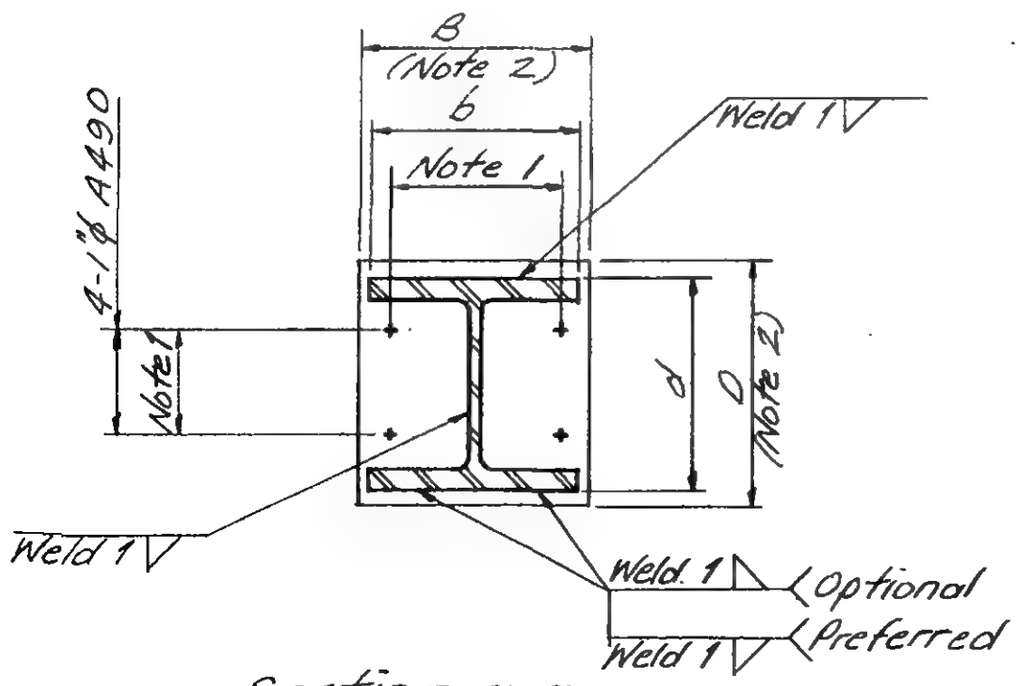

Section a-a

Column Base & Cap Plate Detail

LICENSED PROFESSIONAL ENGINEER — LESLIE E. ROBERTSON — NO 34360 — UNIVERSITY OF THE STATE OF NEW YORK

DESIGNED

DRAWN J. Adams

REVIEWED

9-AB12-4

SKILLING, HELLE, CHRISTIANSEN, ROBERTSON — Structural & Civil Engineers

PROJECT: THE WORLD TRADE CENTER | TITLE: FL 107 - PH CONNECTION DETAILS - FL 107 | DATE: 4-1-70

REVISIONS
5-27-70

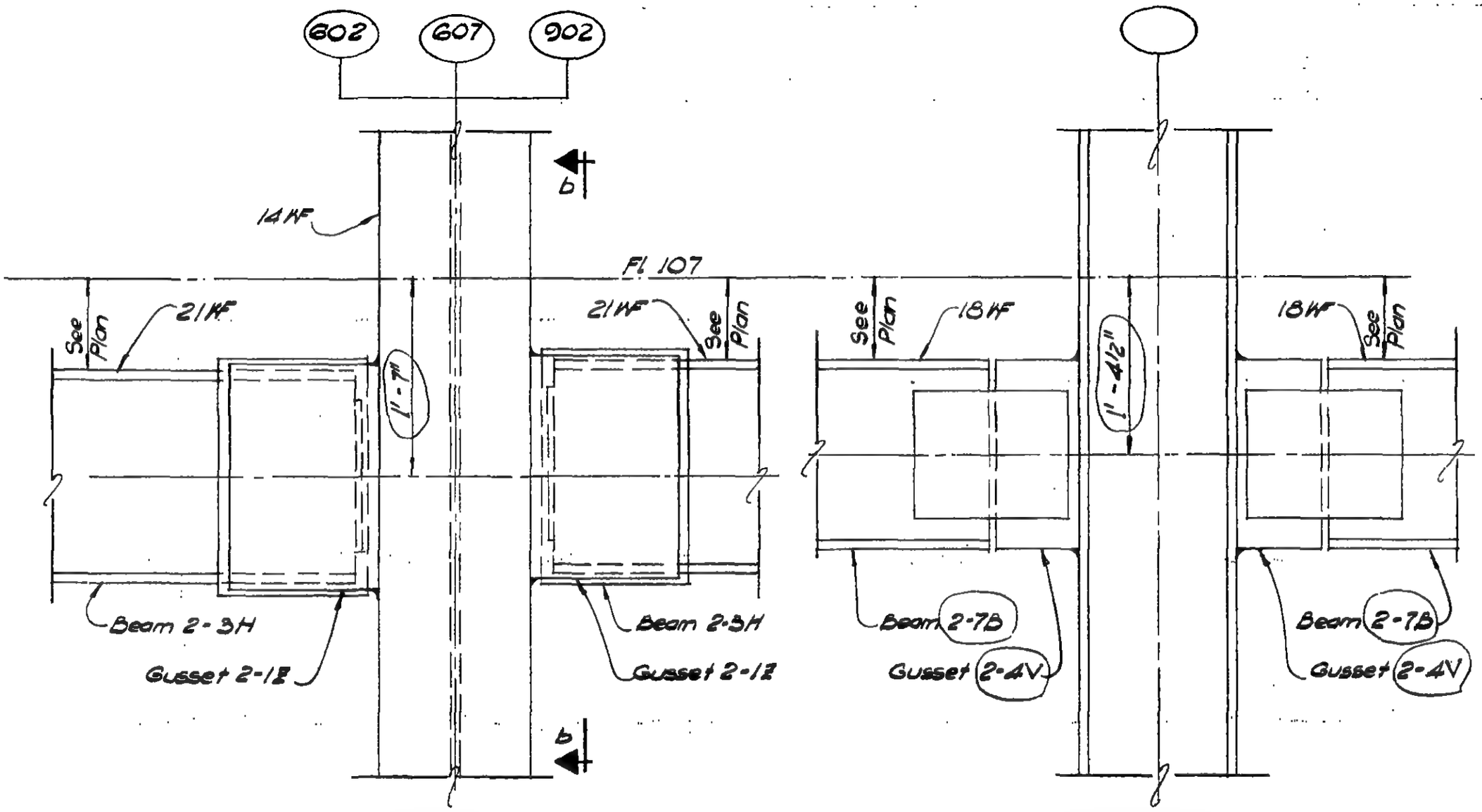

Section a-a

Section b-b

DETAIL 13-4A (Cols 602 & 902 as shown)
DETAIL 13-4B (Col. 607 opp hand)

LICENSED PROFESSIONAL ENGINEER — LESLIE E. ROBERTSON — No. 34860 — UNIVERSITY OF THE STATE OF NEW YORK

DESIGNED K. Hwang
DRAWN M. Clarke
REVIEWED E. Dracos

9-AB13-4.1

SKILLING, HELLE, CHRISTIANSEN, ROBERTSON — Structural & Civil Engineers

PROJECT: THE WORLD TRADE CENTER

TITLE: FL 107 - PH CONNECTION DETAILS - FL 107

DATE: 4-1-70

REVISIONS

5-27-70

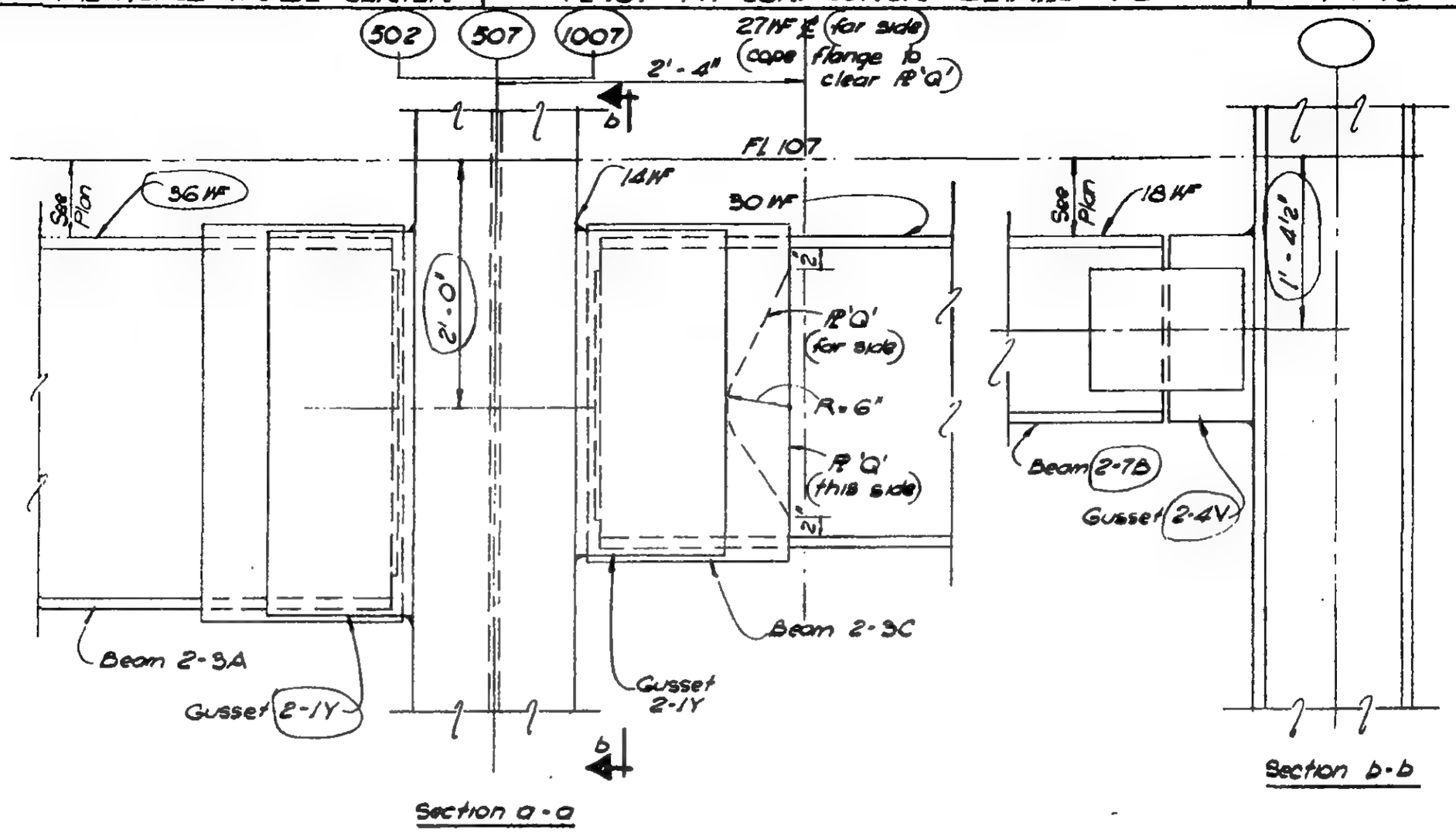

DETAIL 13-4C (Col 502 as shown)

DETAIL 13-4D (Cols 507 & 1007 opp. hand)

LICENSED PROFESSIONAL ENGINEER — LESLIE E. ROBERTSON — No. 34960 — UNIVERSITY OF THE STATE OF NEW YORK

DESIGNED: K. HWANG

DRAWN: M. Clarke

REVIEWED: E. Dracos

9-AB13-4.8

SKILLING, HELLE, CHRISTIANSEN, ROBERTSON — Structural & Civil Engineers

PROJECT: THE WORLD TRADE CENTER | TITLE: FL 107 - PH CONNECTION DETAILS - FL 107 | DATE: 4-1-70

REVISIONS
5-27-70
6-17-70

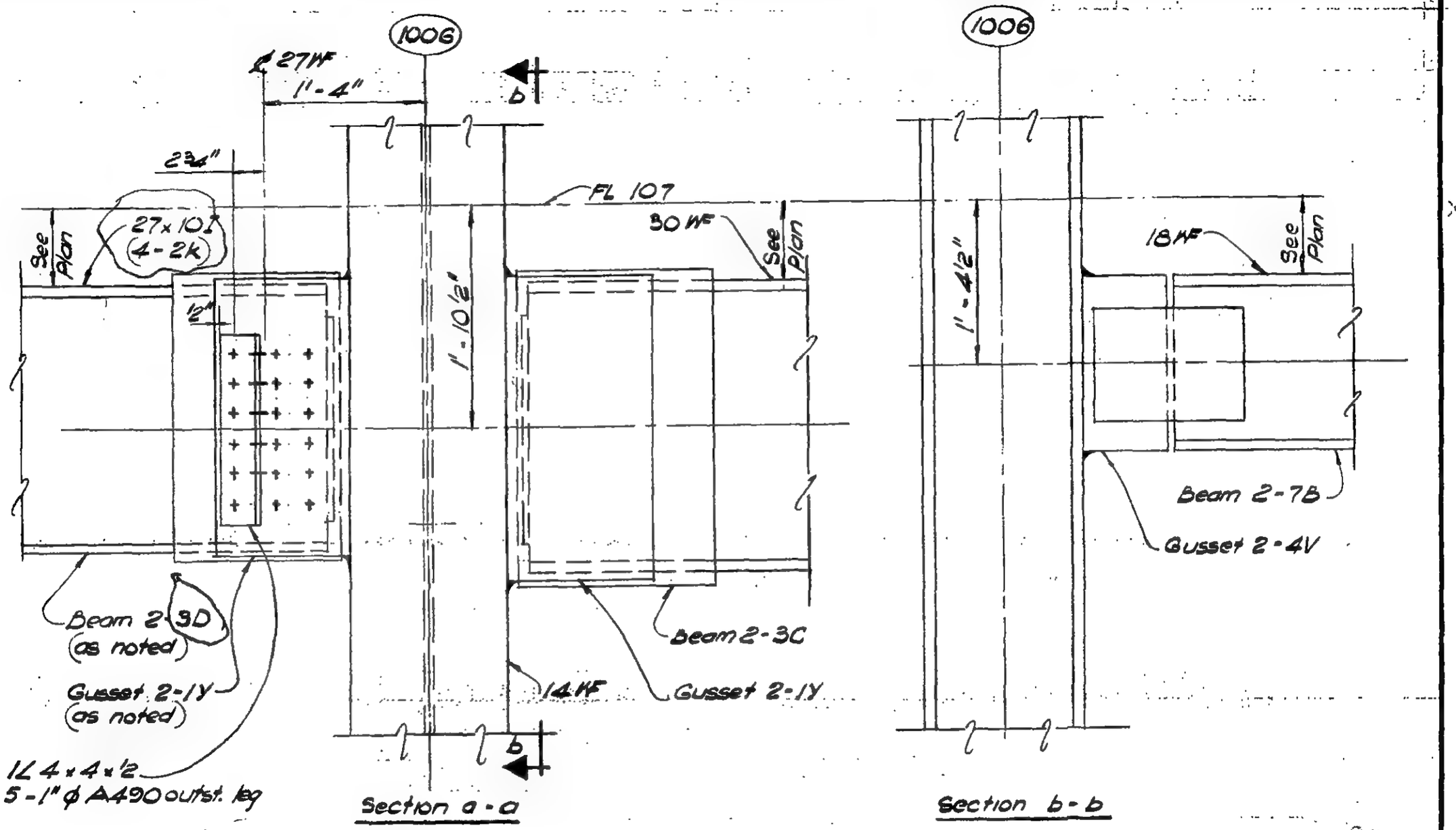

DETAIL 13-4E

LICENSED PROFESSIONAL ENGINEER — LESLIE E. ROBERTSON — No. 34860 — UNIVERSITY OF THE STATE OF NEW YORK

DESIGNED: K. Hwang
DRAWN: W. Clarke
REVIEWED: E. Dravos

9-AB13-4.3

SKILLING, HELLE, CHRISTIANSEN, ROBERTSON — Structural & Civil Engineers

PROJECT: THE WORLD TRADE CENTER | TITLE: FL 107-PH CONNECTION DETAILS - FL 107 | DATE: 4-1-70

REVISIONS
5-27-70
6-17-70

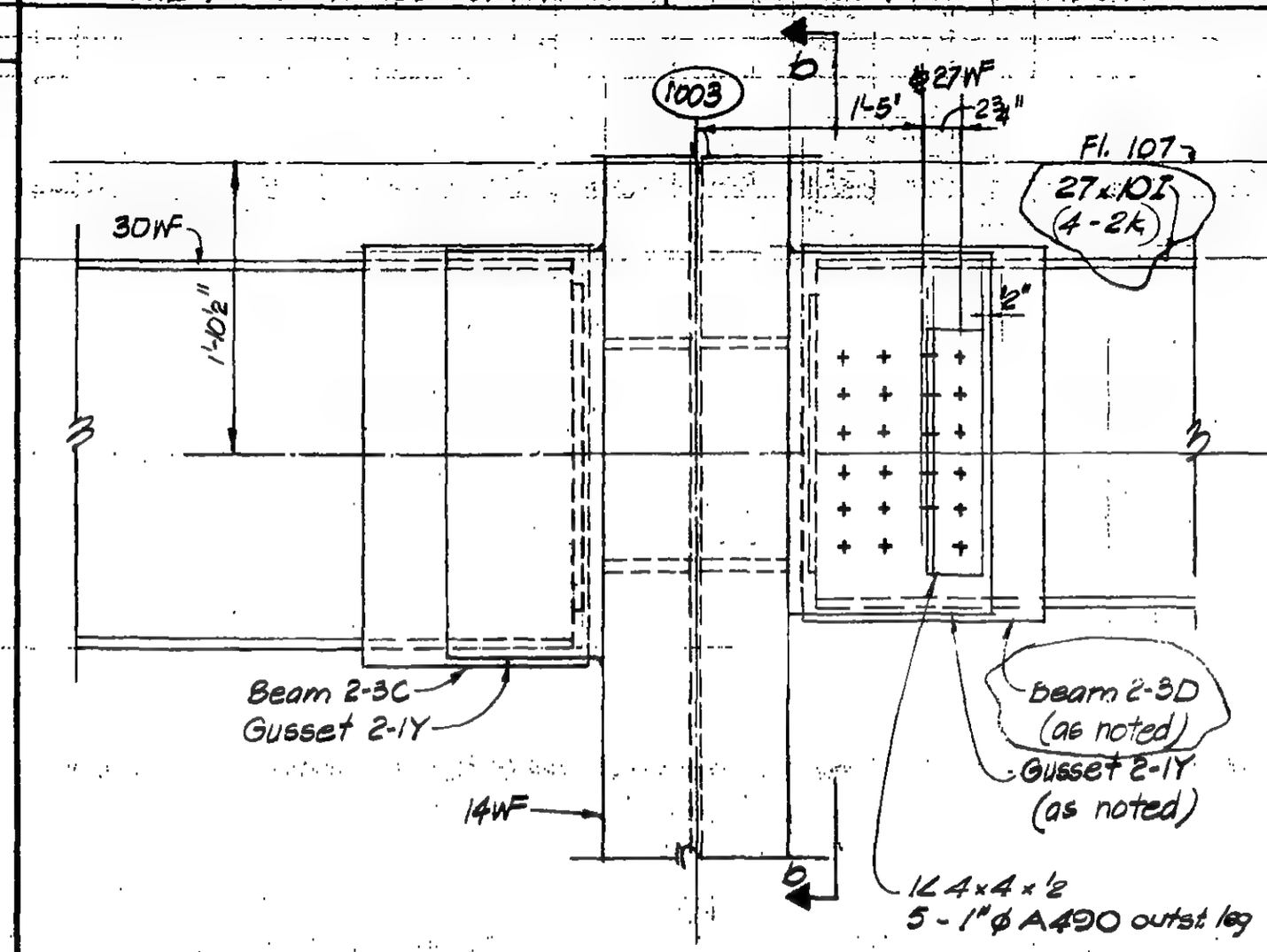

Section a-a

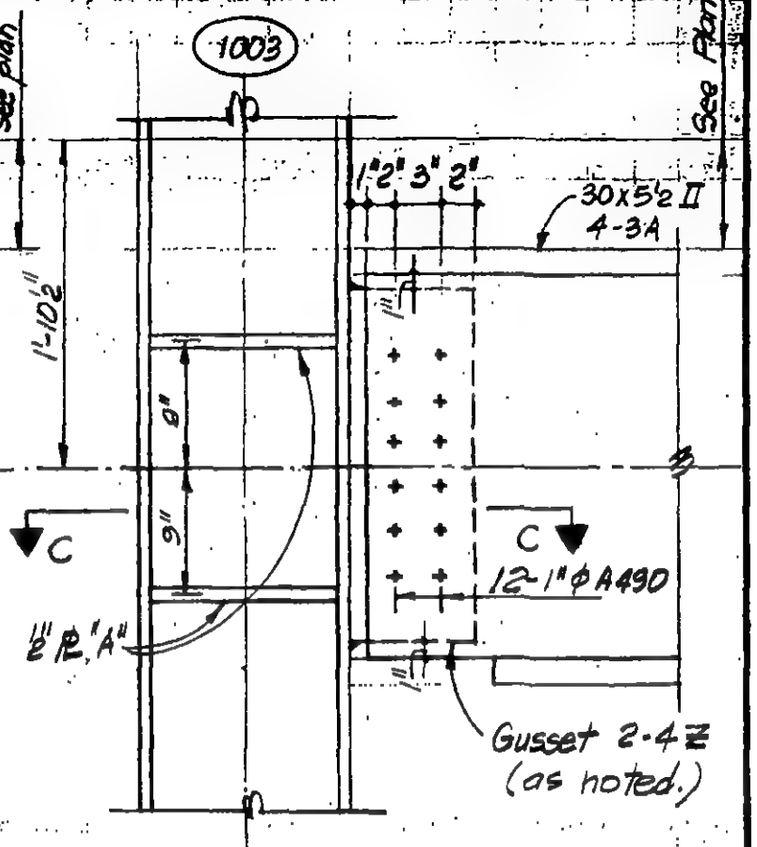

Section b-b

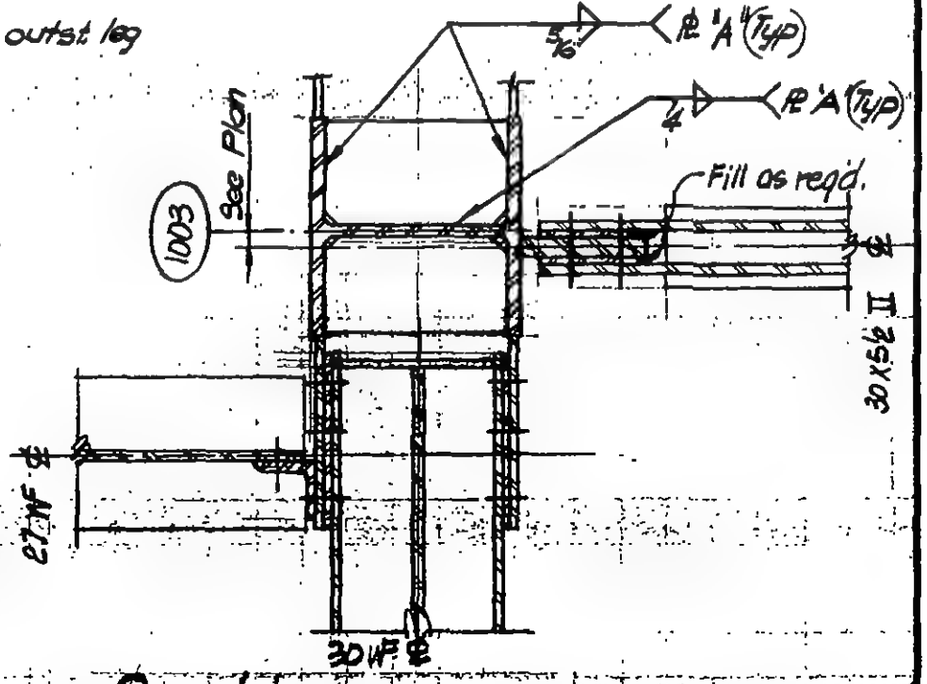

Section c-c

DETAIL 13-4F

3-AB13-44

LICENSED PROFESSIONAL ENGINEER
LESLIE E. ROBERTSON
No. 34360
UNIVERSITY OF THE STATE OF NEW YORK

DESIGNED K. HWANG
DRAWN
REVIEWED E. Drakos

SKILLING, HELLE, CHRISTIANSEN, ROBERTSON — Structural & Civil Engineers

PROJECT: THE WORLD TRADE CENTER | TITLE: FL 107-PH CONNECTION DETAILS - FL 107 | DATE: 4-1-70

REVISIONS

5-27-70
7-8-70

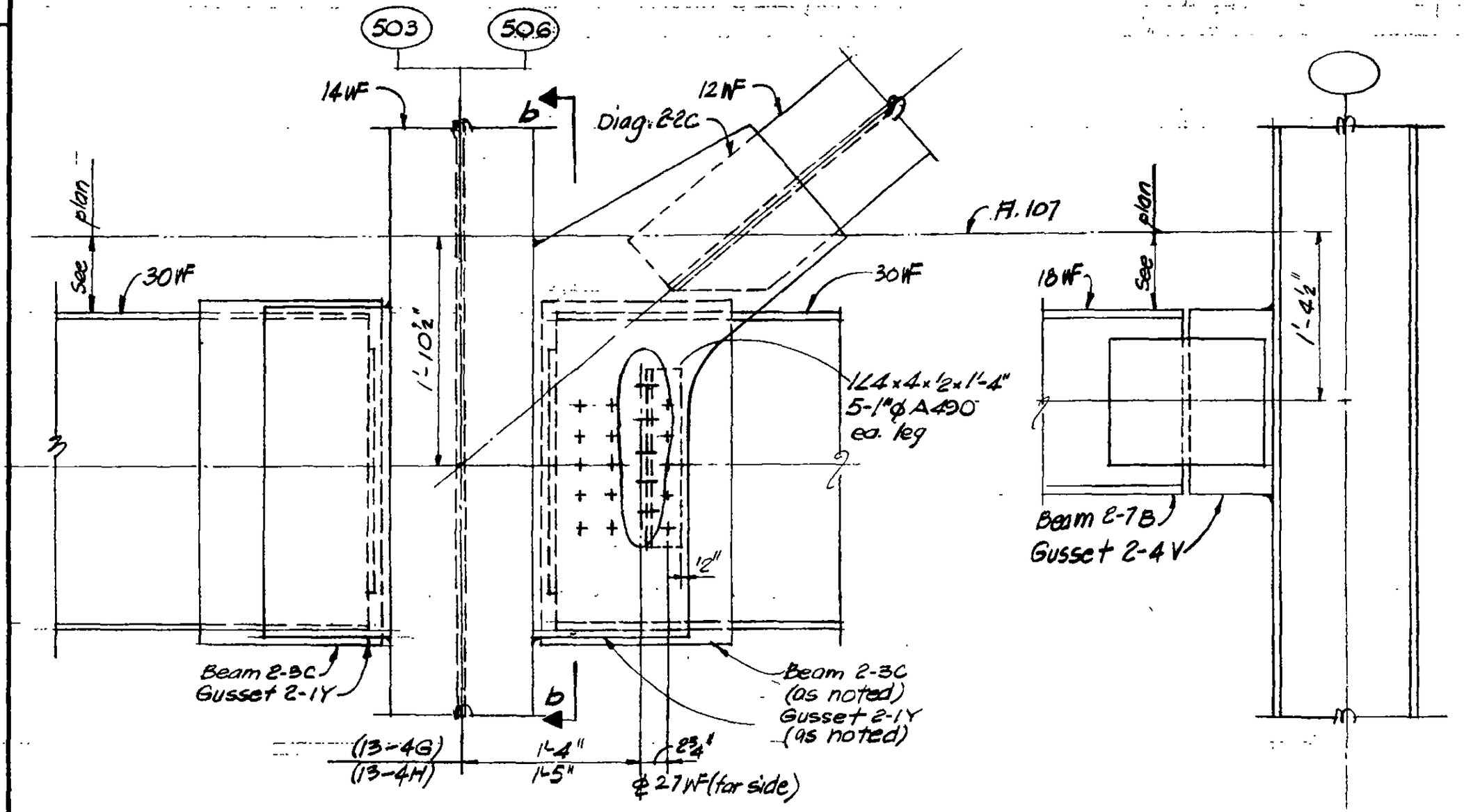

Section a-a

Section b-b

DETAIL 13-4G (Col. 503 as shown)

DETAIL 13-4H (Col. 506 opp hand & as noted)

LICENSED PROFESSIONAL ENGINEER
LESLIE E. ROBERTSON
No. 34860
UNIVERSITY OF THE STATE OF NEW YORK

DESIGNED: K. HWANG

DRAWN: [redacted]

REVIEWED: E. Drakos

8-AB13-45

SKILLING, HELLE, CHRISTIANSEN, ROBERTSON — Structural & Civil Engineers

PROJECT: THE WORLD TRADE CENTER | TITLE: FL 107-PH CONNECTION DETAILS - FL 107 | DATE: 4-1-70

REVISIONS

5-27-70

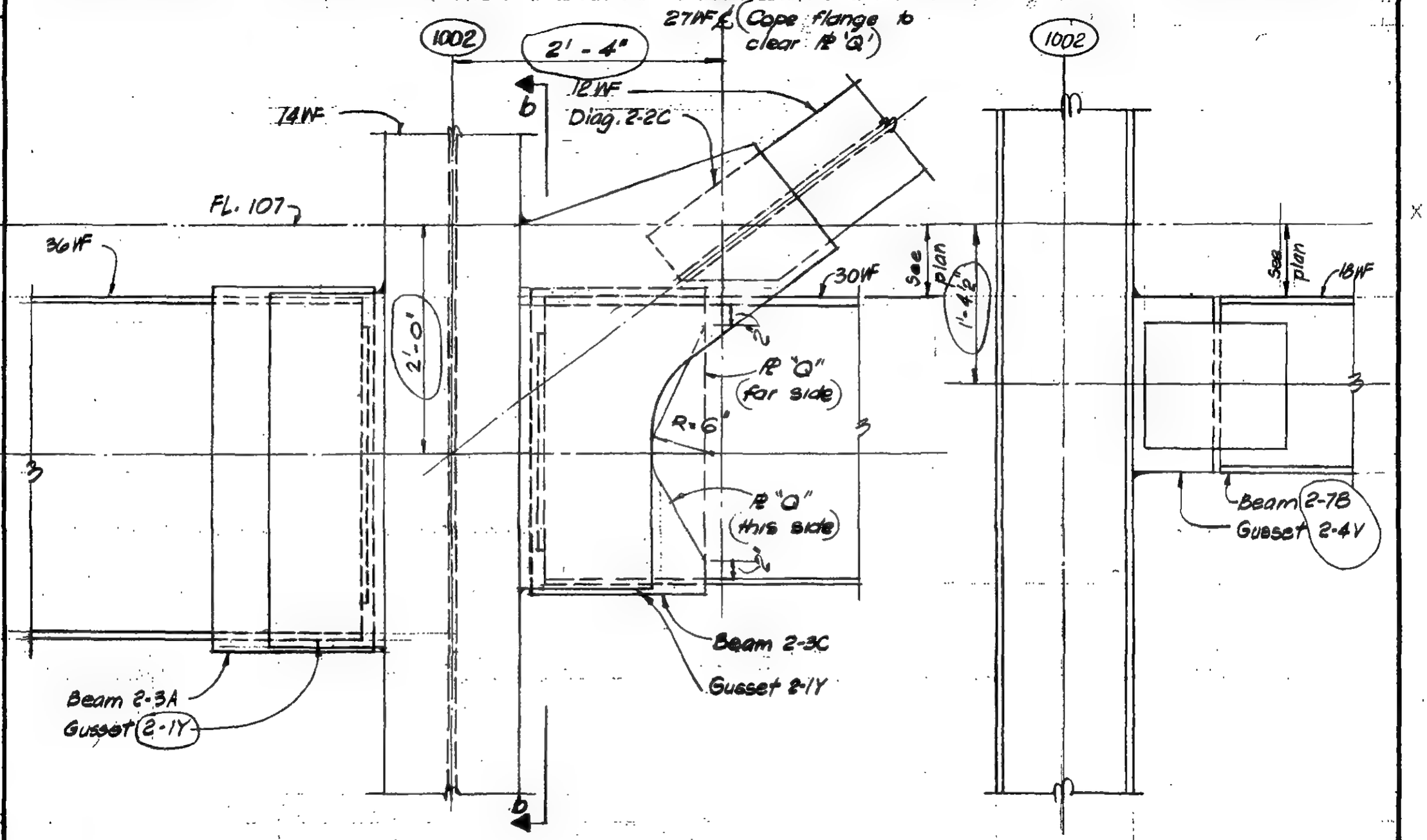

Section a-a

Section b-b

DETAIL 13-4K

LICENSED PROFESSIONAL ENGINEER LESLIE E. ROBERTSON No 34360 UNIVERSITY OF THE STATE OF NEW YORK

DESIGNED: C. HWANG

DRAWN: [illegible]

REVIEWED: E. Drakos

8-[illegible]

SKILLING, HELLE, CHRISTIANSEN, ROBERTSON — Structural & Civil Engineers

PROJECT: THE WORLD TRADE CENTER | TITLE: FL. 107 - PH CONNECTION DETAILS - FL. 107 | DATE: 8-3-70

REVISIONS

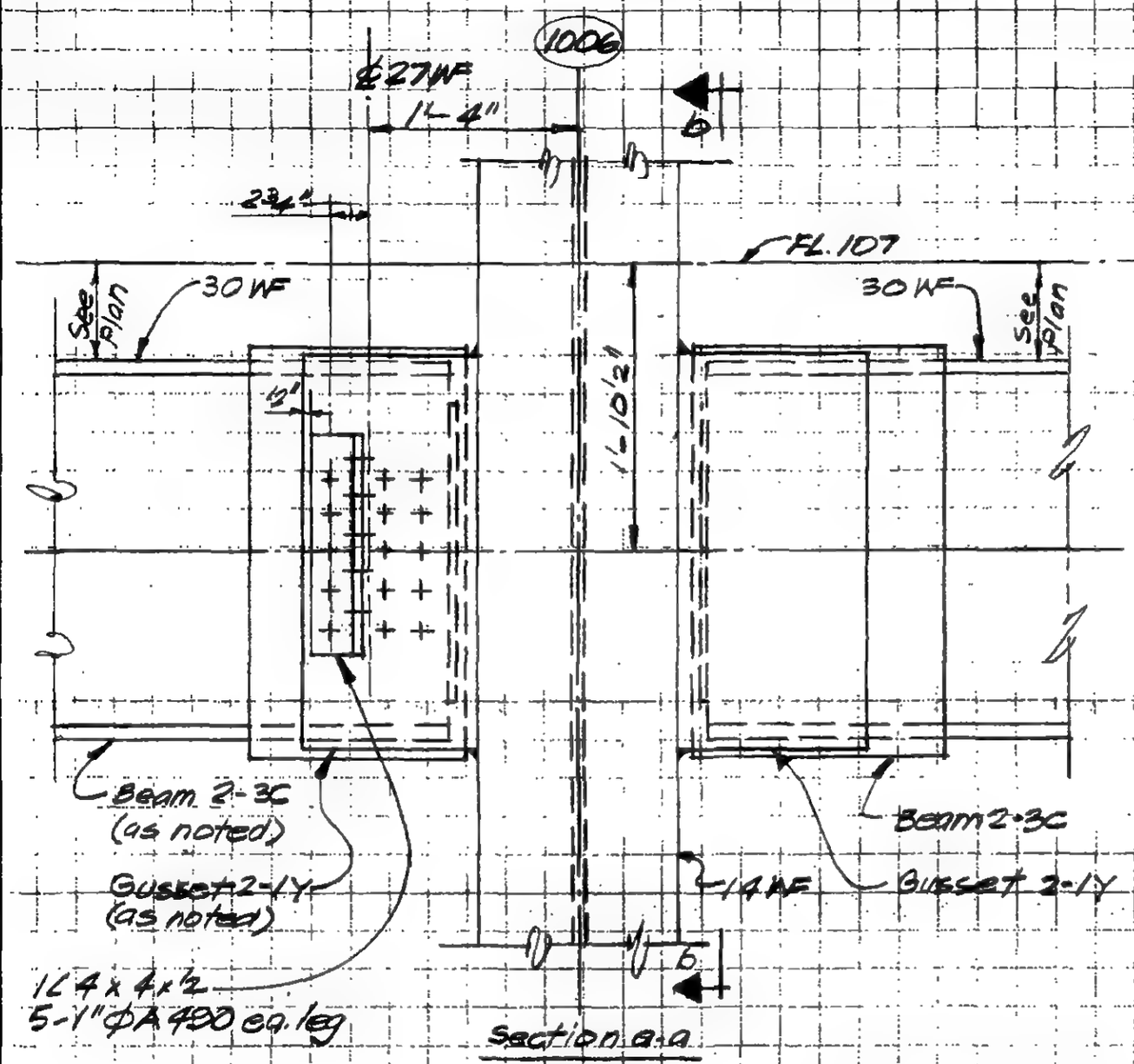

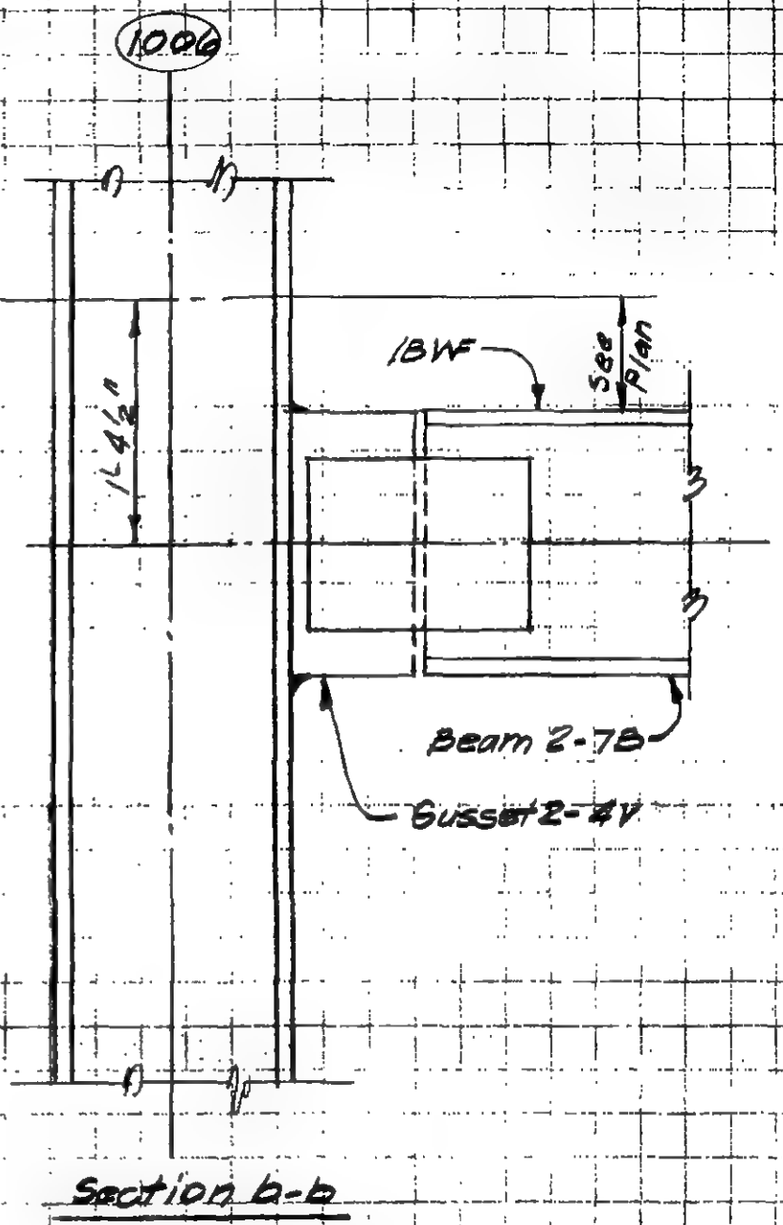

DETAIL 13-4M

LICENSED PROFESSIONAL ENGINEER — LESLIE E. ROBERTSON — No. 34360 — UNIVERSITY OF THE STATE OF NEW YORK

DESIGNED

DRAWN P. Ozaki

REVIEWED

2-B13-4.1

SKILLING, HELLE, CHRISTIANSEN, ROBERTSON — Structural & Civil Engineers

PROJECT: THE WORLD TRADE CENTER | TITLE: FL.107-P.H. CONNECTION DETAILS- FL.107 | DATE: 8-3-70

REVISIONS

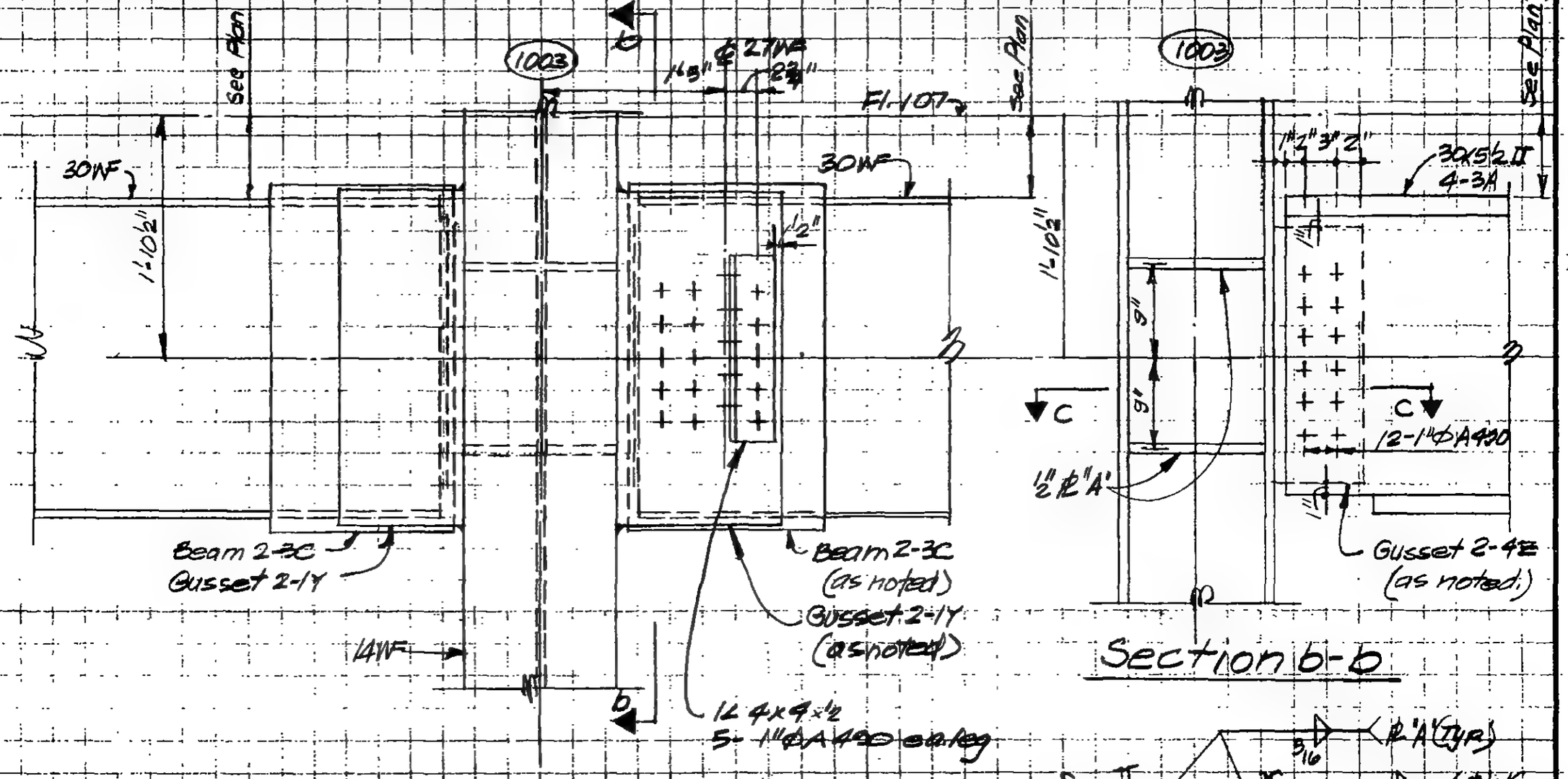

LICENSED PROFESSIONAL ENGINEER — LESLIE E. ROBERTSON — No. 34360 — UNIVERSITY OF THE STATE OF NEW YORK

DESIGNED

DRAWN: M Ozeki

REVIEWED

9-B13-4.8

SKILLING, HELLE, CHRISTIANSEN, ROBERTSON — Structural & Civil Engineers

PROJECT THE WORLD TRADE CENTER | TITLE FL.107-PH CONNECTION DETAIL - FL.107 | DATE 4-1-70

REVISIONS
5-27-70

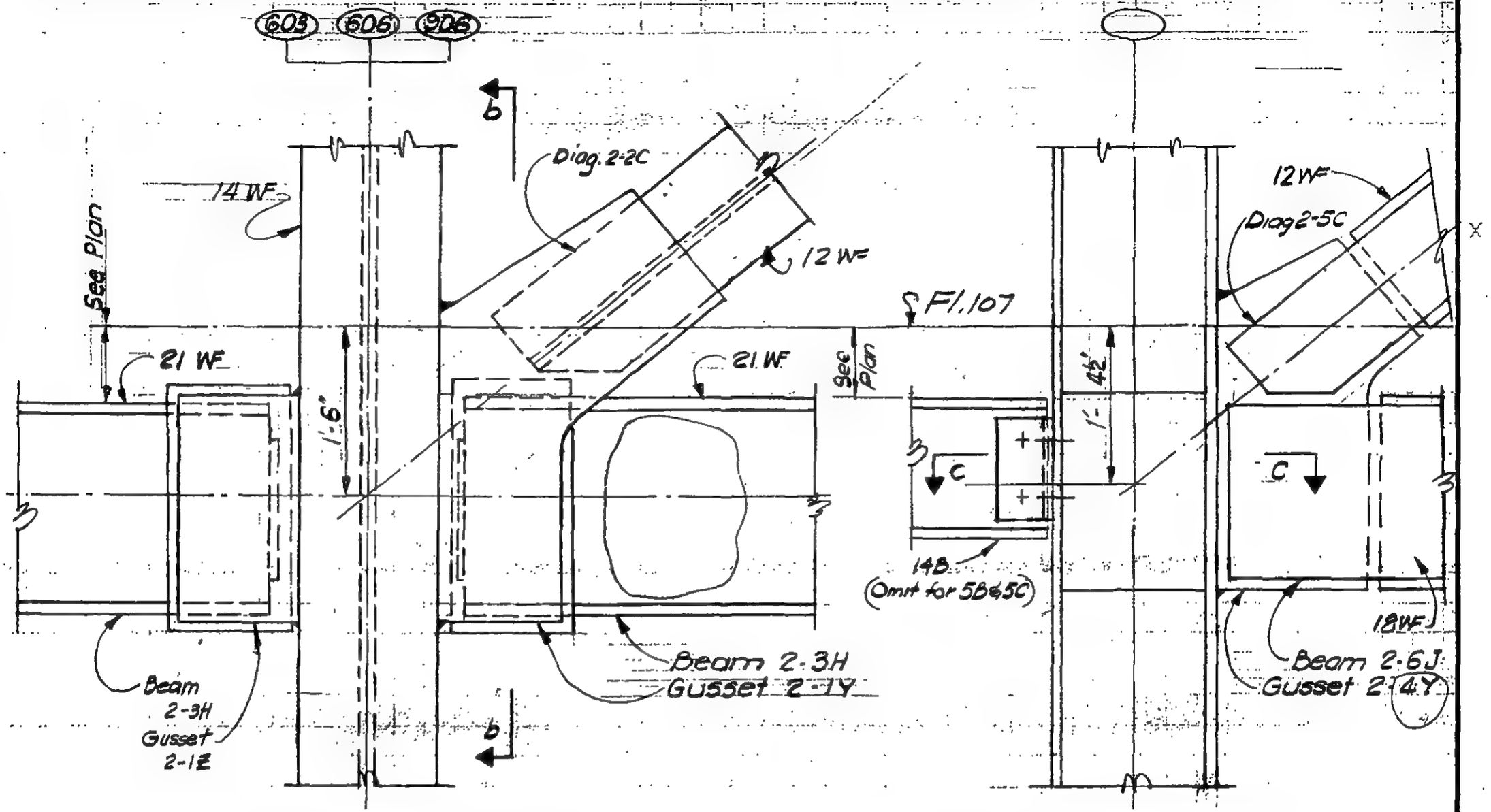

Section a-a

Section b-b

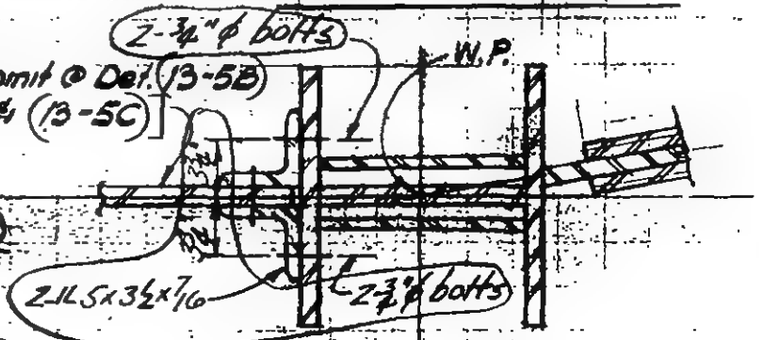

Detail 13-5A (Col 603 as shown)
Detail 13-5B (Col. 606 opp hand & as noted)
Detail 13-5C (Col. 906 similar & as noted)

Section c-c

9-AB 13-5.1

LICENSED PROFESSIONAL ENGINEER — LESLIE E. ROBERTSON — No. 34360 — UNIVERSITY OF THE STATE OF NEW YORK

DESIGNED K. HWANG
DRAWN P. MARSKI
REVIEWED E. Dracos

SKILLING, HELLE, CHRISTIANSEN, ROBERTSON — Structural & Civil Engineers

PROJECT: THE WORLD TRADE CENTER | TITLE: FL 107 - PH CONNECTION DETAILS - FL 107 | DATE: 4-1-70

REVISIONS
5-27-70
7-8-70

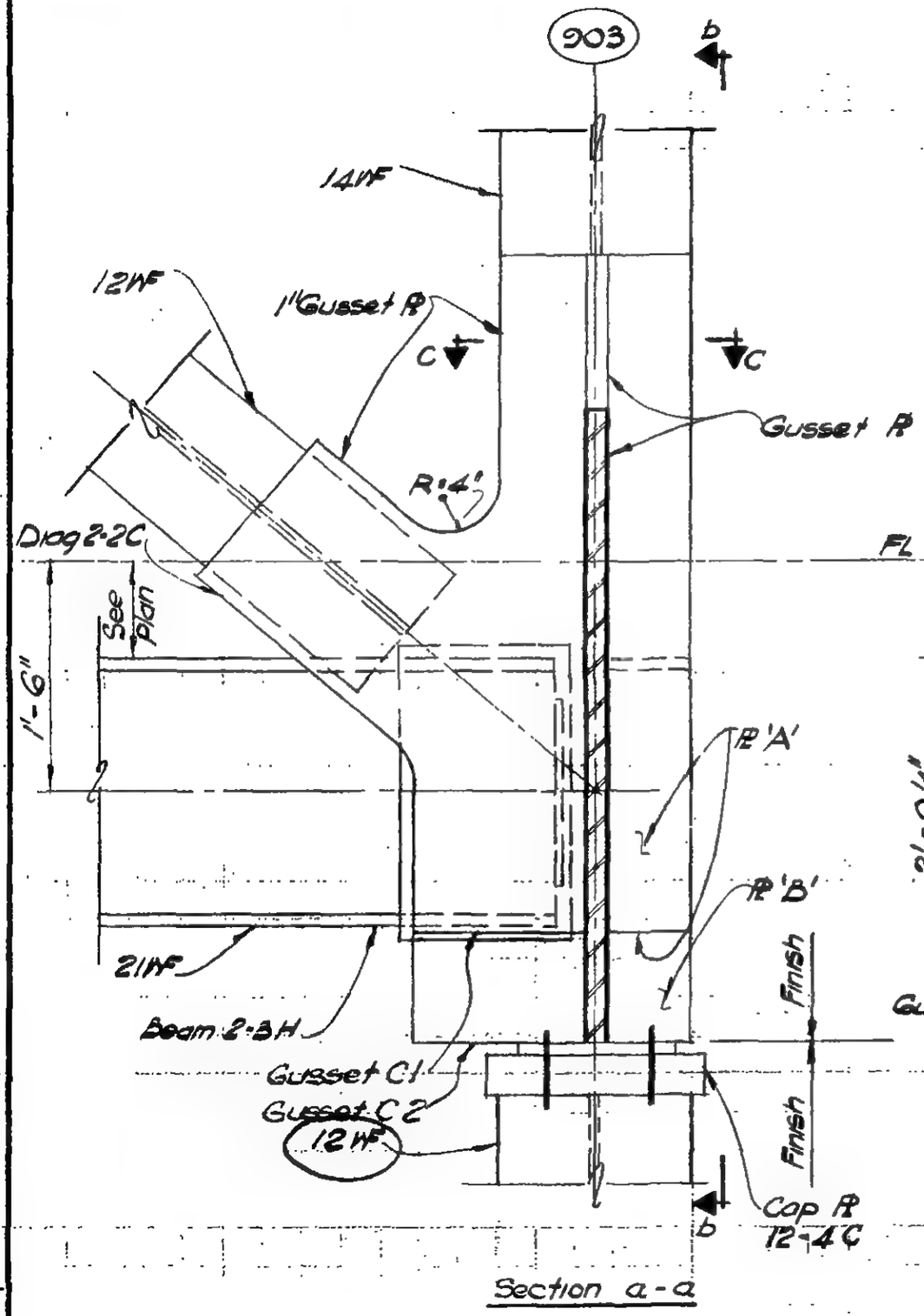

Section a-a

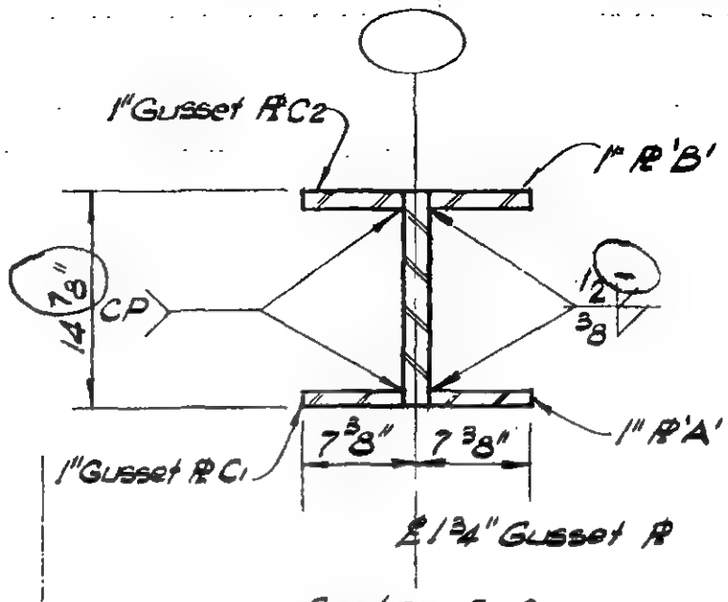

Section c-c

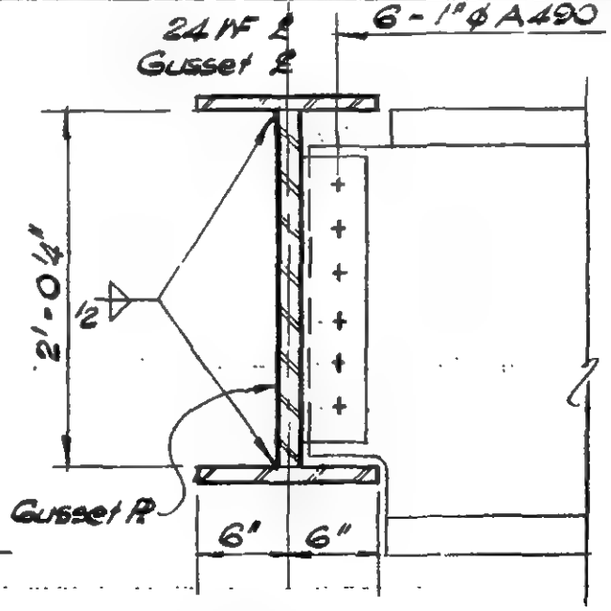

Section d-d

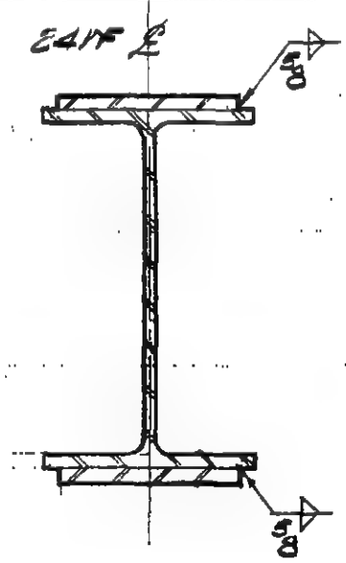

Section e-e

DETAIL 13-5D

LICENSED PROFESSIONAL ENGINEER — LESLIE E. ROBERTSON — No. 34360 — UNIVERSITY OF THE STATE OF NEW YORK

DESIGNED: Jor Voy
DRAWN: M. Clarke
REVIEWED: E. Dracos

9-AB13-5.2

SKILLING, HELLE, CHRISTIANSEN, ROBERTSON — Structural & Civil Engineers

PROJECT: THE WORLD TRADE CENTER | TITLE: FL 107 - PH1 CONNECTION DETAILS - FL 107 | DATE: 4-1-70

REVISIONS
5-27-70
7-8-70
7-13-70

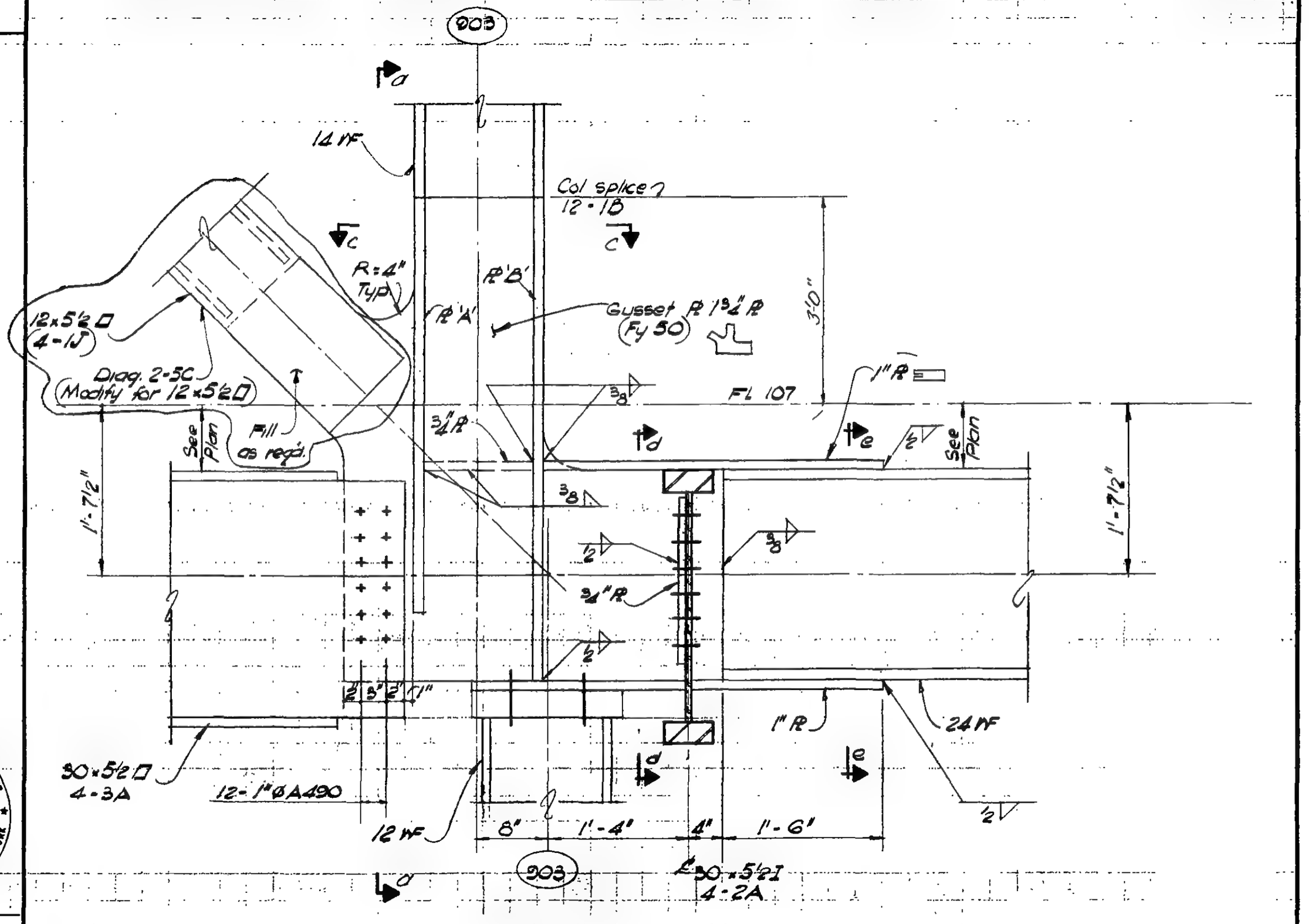

Section b-b

LICENSED PROFESSIONAL ENGINEER — LESLIE E. ROBERTSON — No. 34360 — UNIVERSITY OF THE STATE OF NEW YORK

DESIGNED K. Vom
DRAWN W. Clarke
REVIEWED E. Drakos

9-AB13-5.3

SKILLING, HELLE, CHRISTIANSEN, ROBERTSON

PROJECT: THE WORLD TRADE CENTER — FL 107-PH CONNECTION DETAILS A-107 — DATE: 4-1-70

REVISIONS

5/27/70

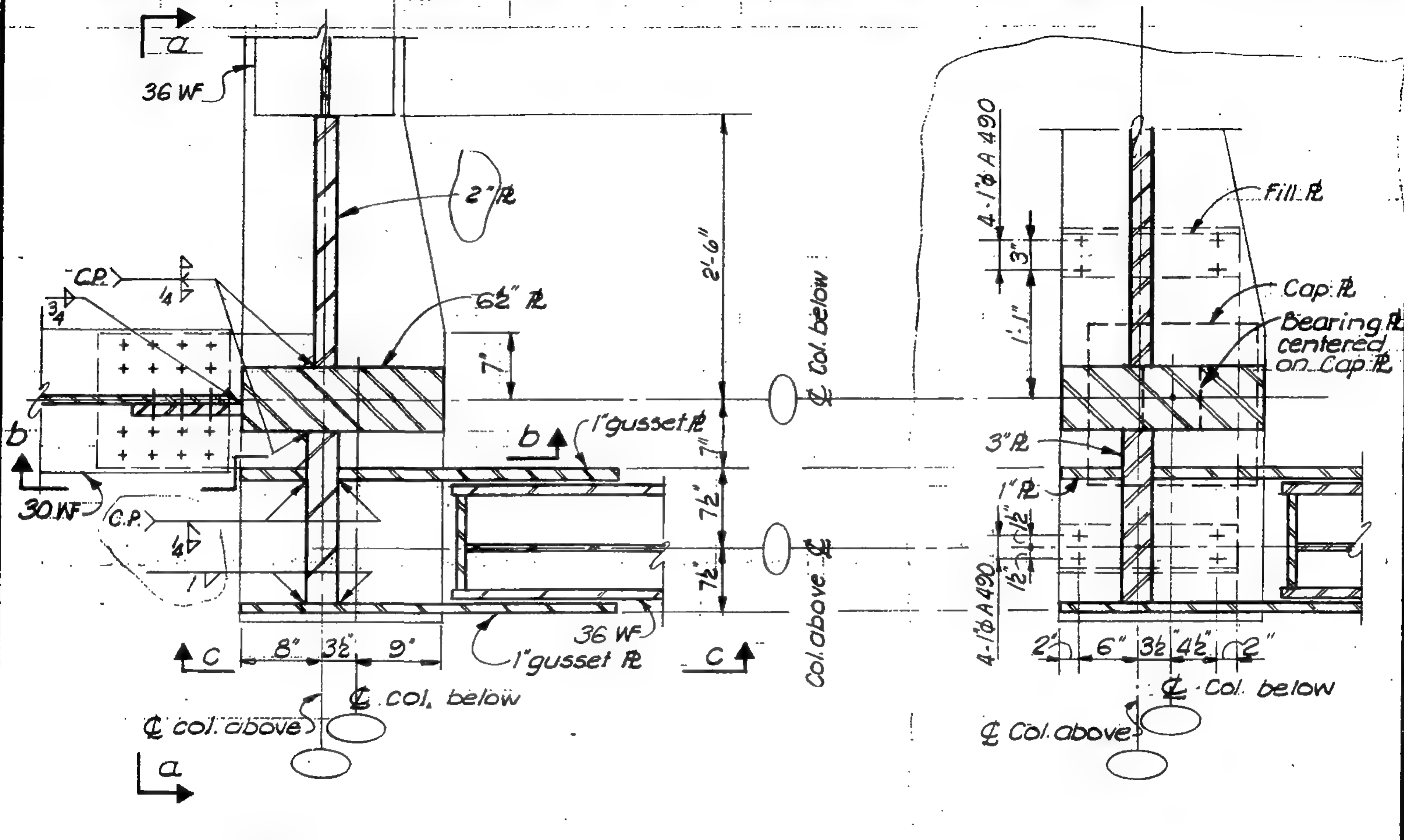

Plan A-A

Plan B-B

Detail 13-7A

Col. 1001 as shown

Col.'s 501, 508 & 1008 similar

Notes:

1.– All Pl's and detail material on this detail consist of Fy = 50 ksi material.

2.– All Pl's designated as gusset Pl's shall have holes 3/16" larger than nominal bolt diameter, for all remaining Pl's and members shall be 1/16" larger

LICENSED PROFESSIONAL ENGINEER — LESLIE E. ROBERTSON — No. 34360 — UNIVERSITY OF THE STATE OF NEW YORK

CHKD: J. Vow

DRAWN: J. Gricius

REVIEWED: C. Dravos

9-AB13-7.1

SKILLING, HELLE, CHRISTIANSEN, ROBERTSON — Structural & Civil Engineers

PROJECT: THE WORLD TRADE CENTER | TITLE: Fl. 107-PH CONNECTION DETAIL - FLOOR 107 | DATE: 4-1-70

REVISIONS

5/27/70

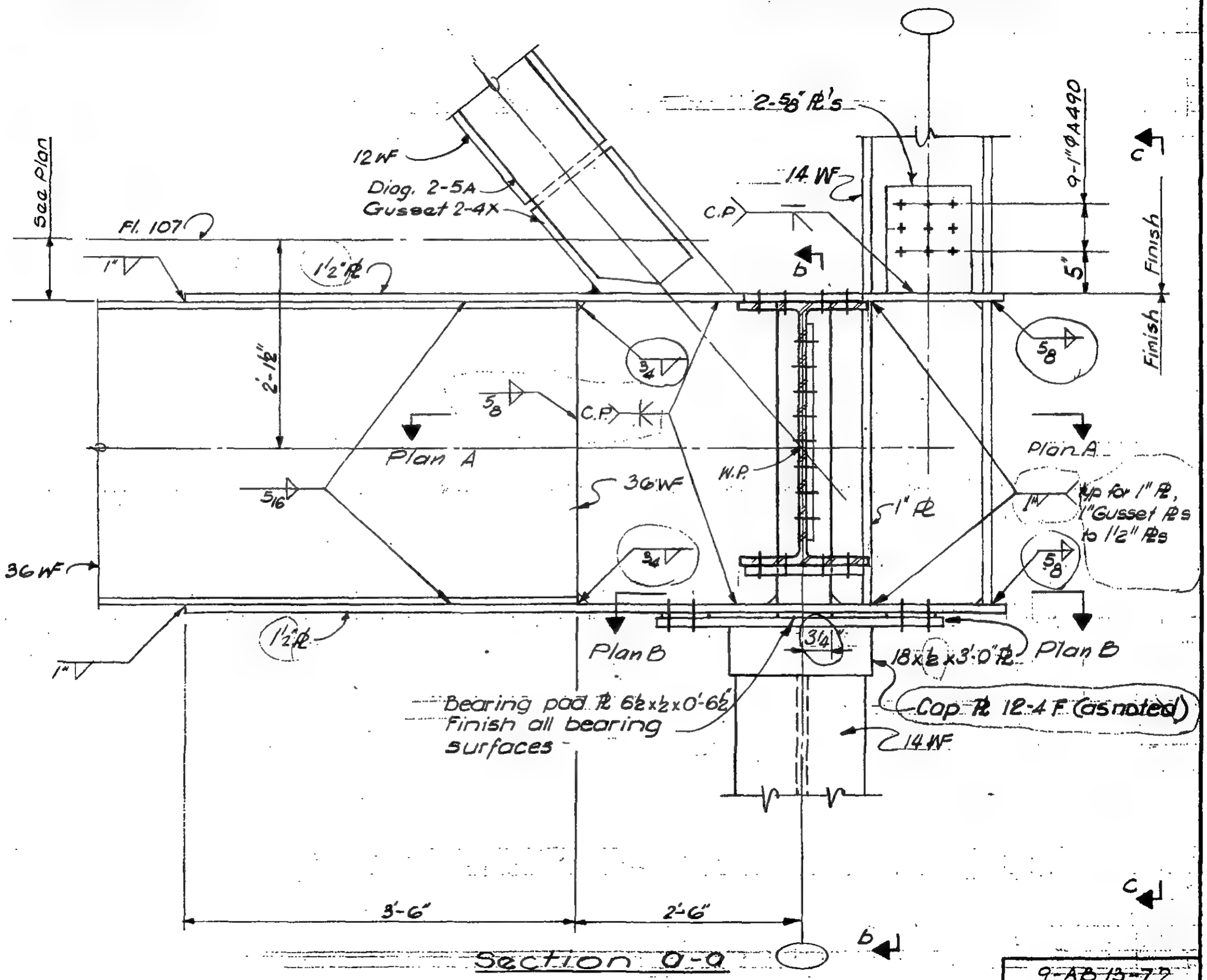

Section a-a

9-AB 13-7.2

LICENSED PROFESSIONAL ENGINEER — LESLIE E. ROBERTSON — No. 34960 — UNIVERSITY OF THE STATE OF NEW YORK

DESIGNED: H. Von

DRAWN: J. Gricius

REVIEWED: E. Dracos

SKILLING, HELLE, CHRISTIANSEN, ROBERTSON — Structural & Civil Engineers

PROJECT: THE WORLD TRADE CENTER | TITLE: FL. 107 - PH. CONNECTION DETAIL - FLOOR 107 | DATE: 4-1-70

REVISIONS

5/27/70

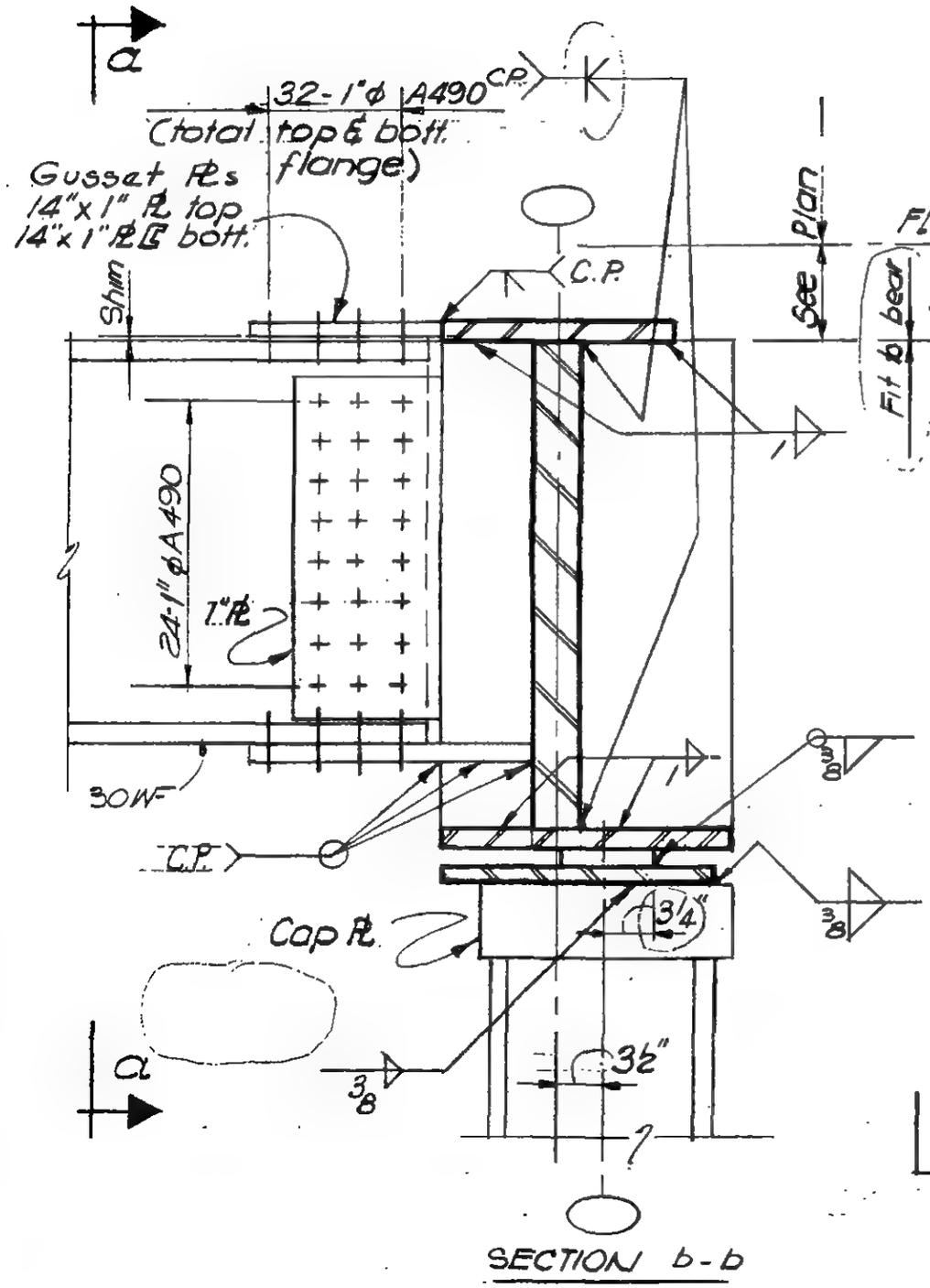

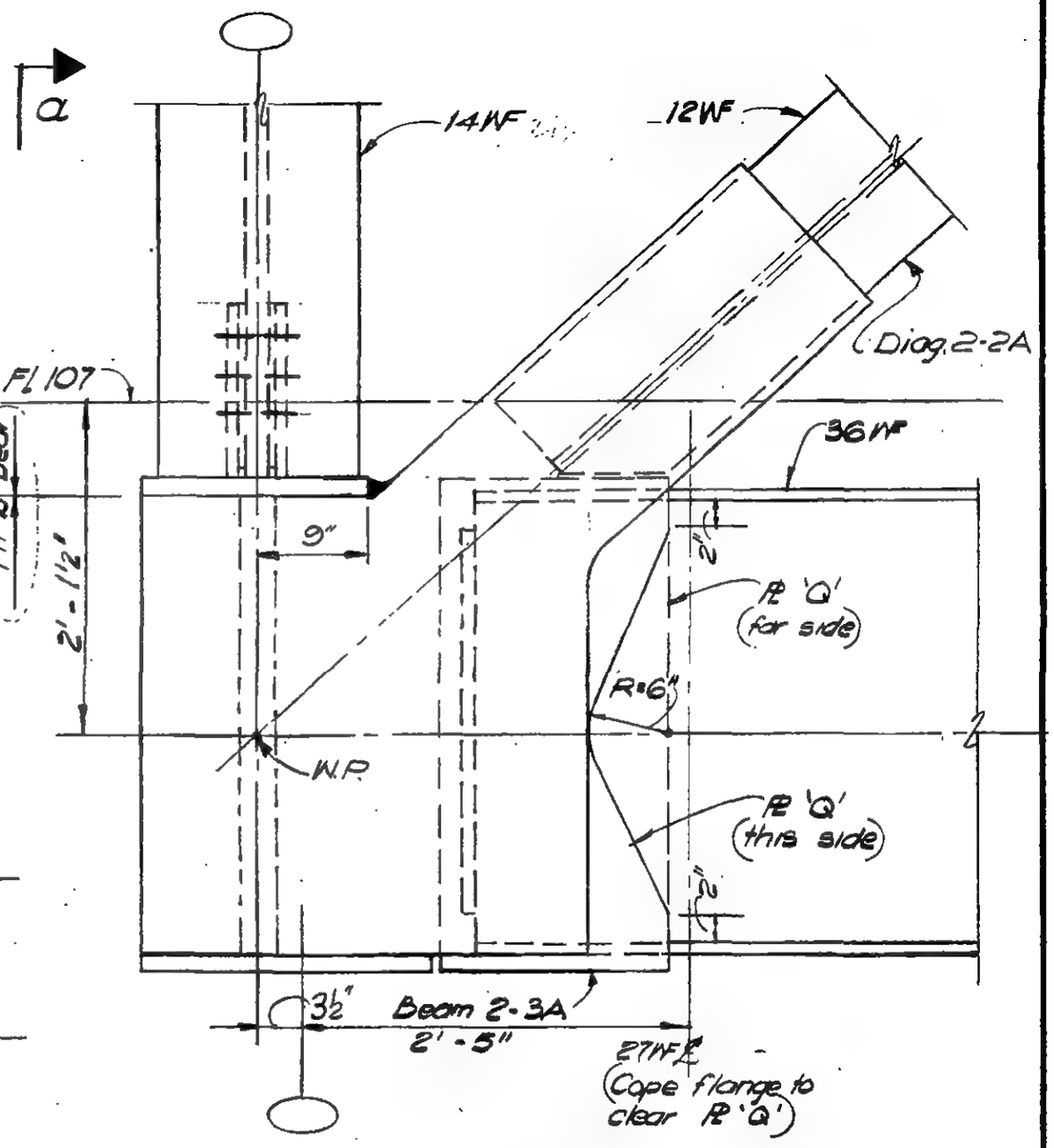

DESIGNED: H. Vbw

DRAWN: W. Clarke

REVIEWED: E. Dramos

9-AB/3-7-3

SKILLING, HELLE, CHRISTIANSEN, ROBERTSON — Structural & Civil Engineers

PROJECT: THE WORLD TRADE CENTER | TITLE: FL 107 - PH CONNECTION DETAILS · FLOOR 107 | DATE: 4-1-70

REVISIONS

5/27/70

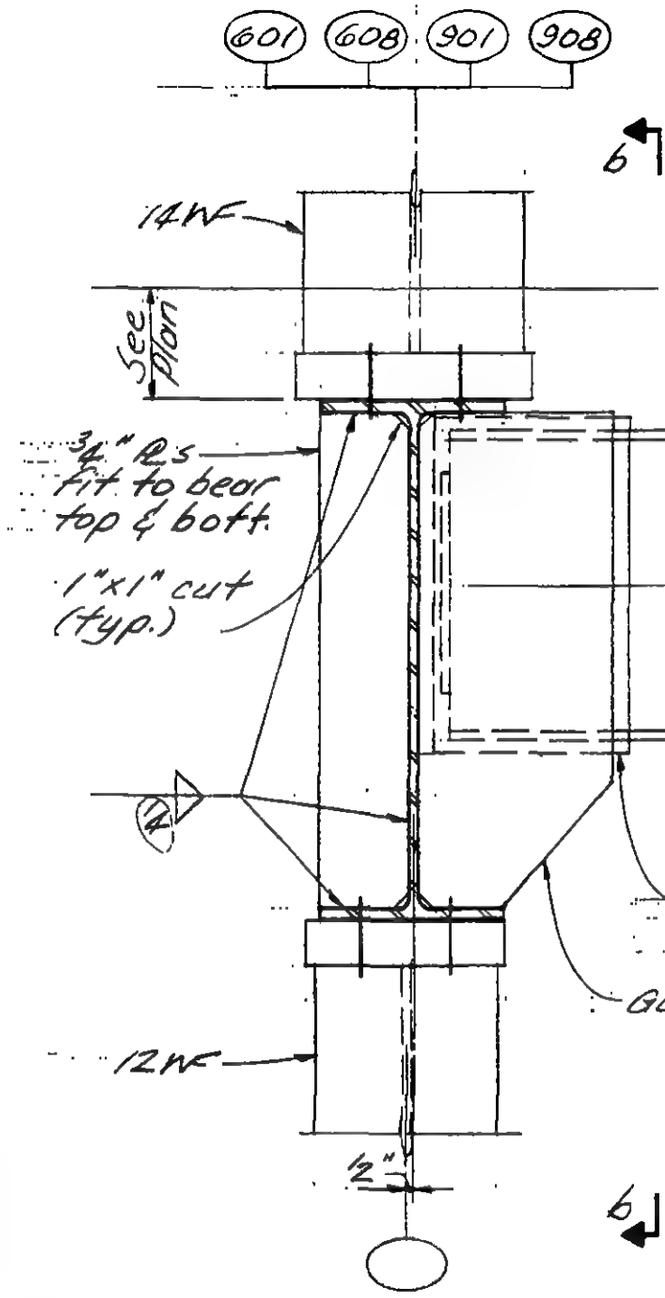

Section a-a
Cols. 601 & 901 as shown
Cols. 608 & 908 opp. hand

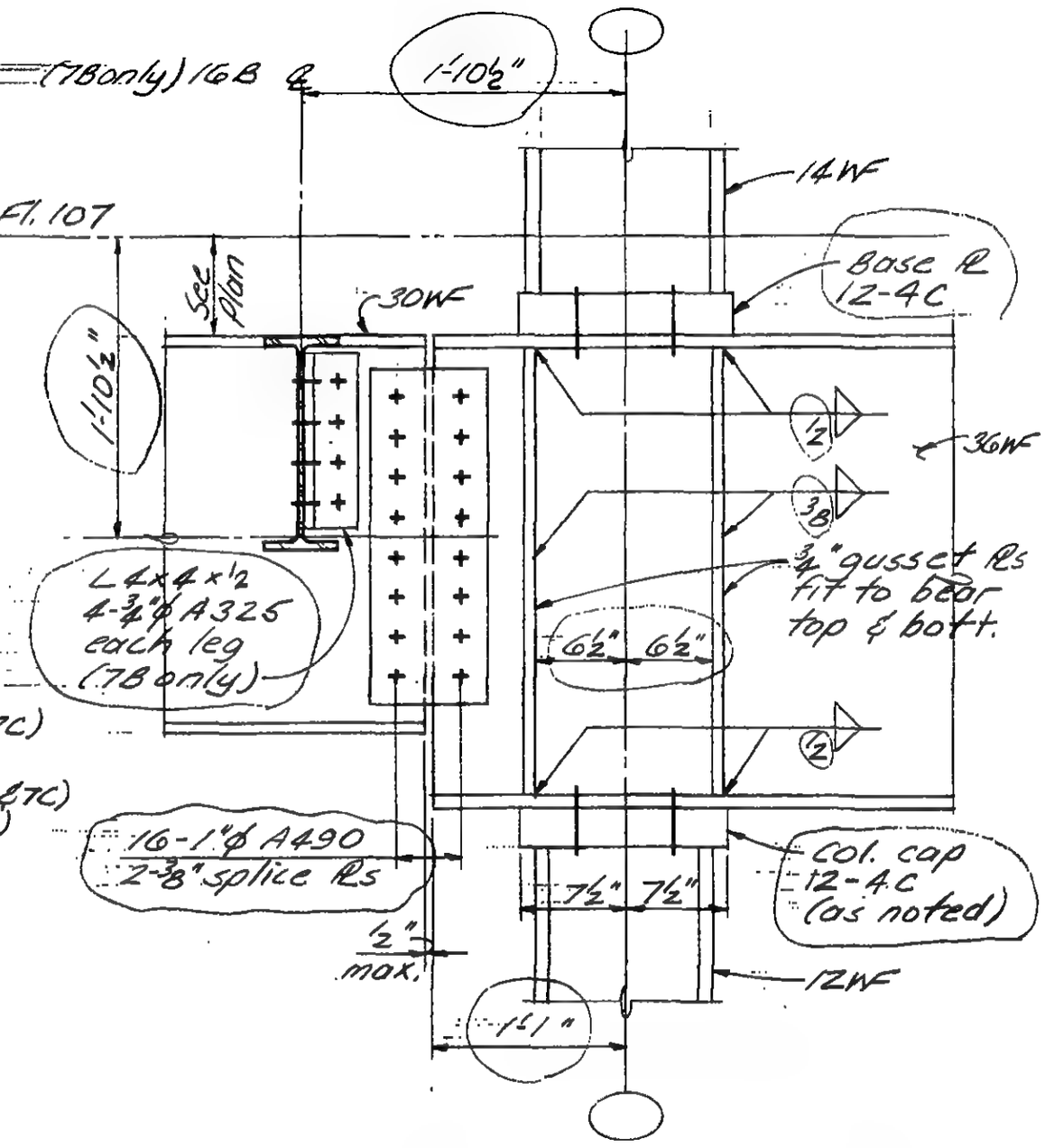

Section b-b

Detail 13-7B Cols. 601 & 608
Detail 13-7C Col. 901
Detail 13-7D Col. 908

LICENSED PROFESSIONAL ENGINEER — LESLIE E. ROBERTSON — No 34360 — UNIVERSITY OF THE STATE OF NEW YORK

DESIGNED H. Vost
DRAWN J. Adams
REVIEWED E. Dragos

9-AB13-7.4

SKILLING, HELLE, CHRISTIANSEN, ROBERTSON — Structural & Civil Engineers

PROJECT: THE WORLD TRADE CENTER | TITLE: FL 107 - PH CONNECTION DETAILS - FL 107 | DATE: 4-1-70

REVISIONS
5-27-70

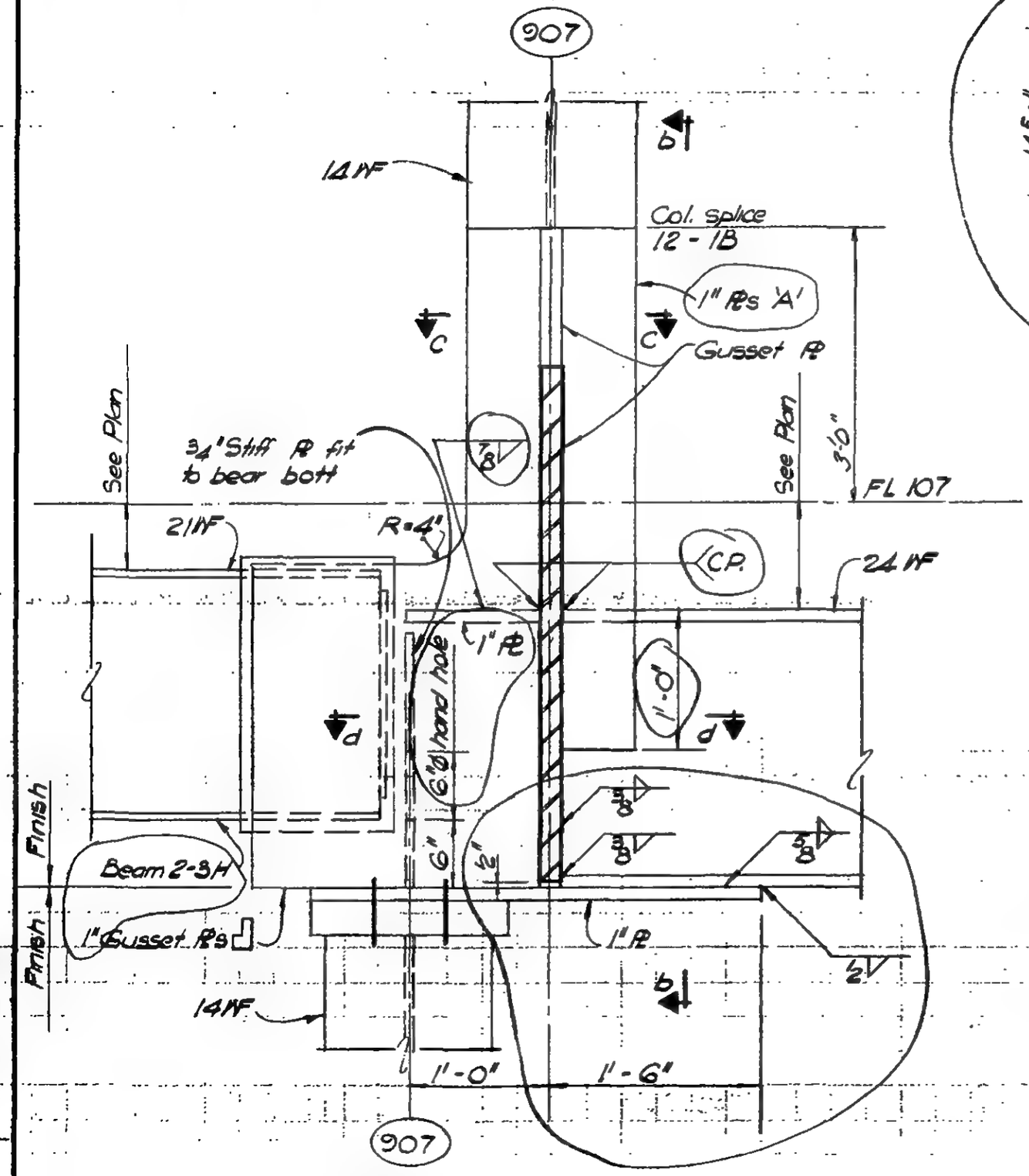

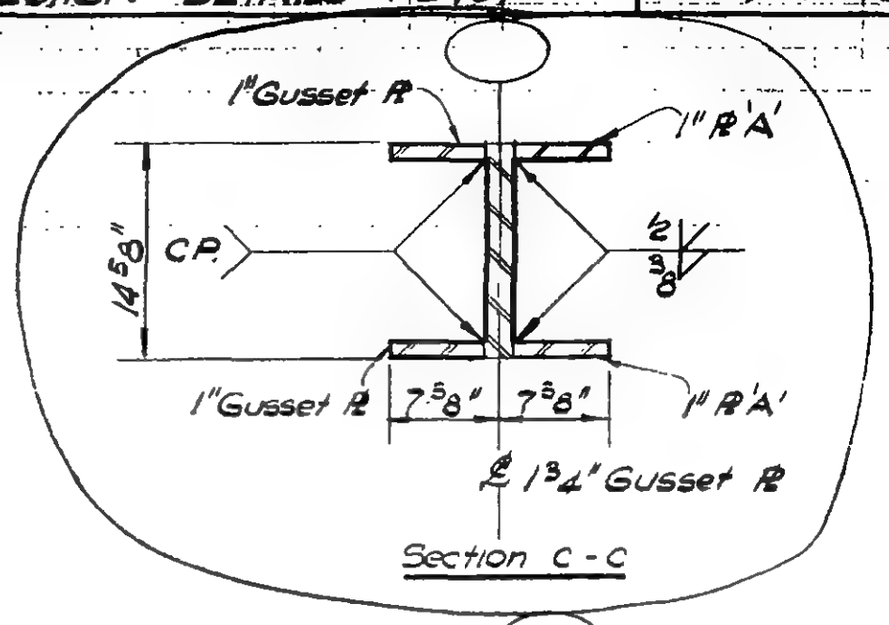

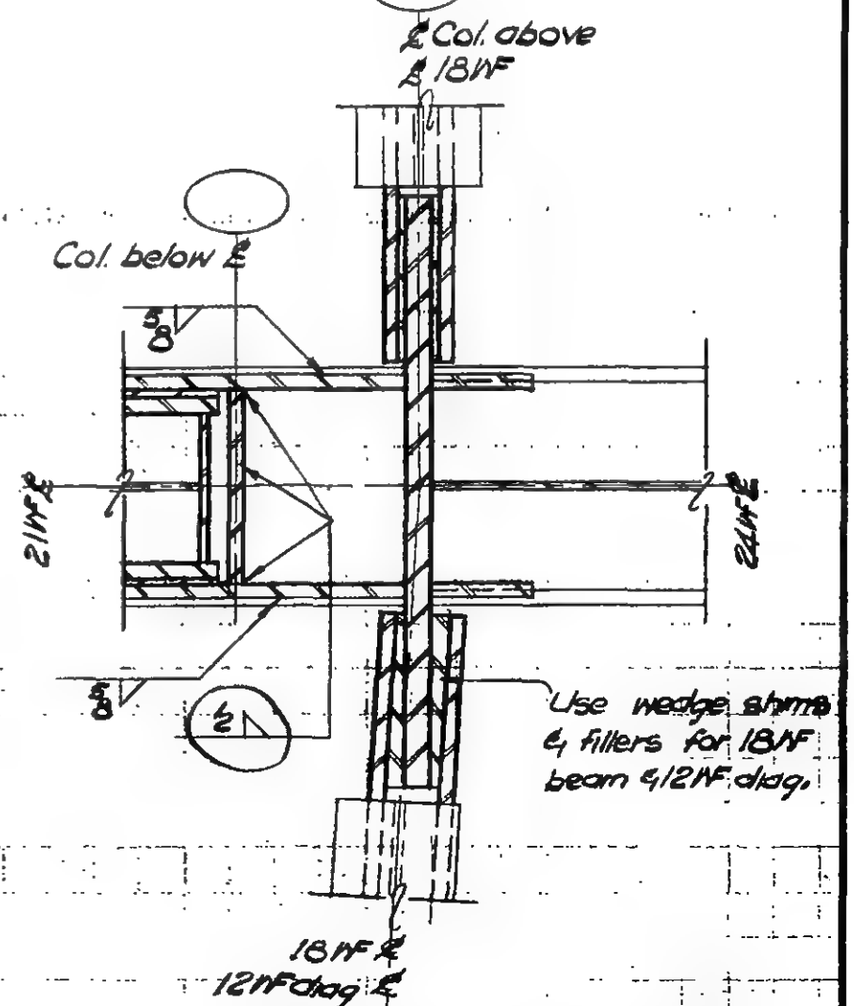

LICENSED PROFESSIONAL ENGINEER — ASBJØRN E. ROBERTSON — No. 34860 — UNIVERSITY OF THE STATE OF NEW YORK

DESIGNED: J. Vow
DRAWN: M. Clarke
REVIEWED: E. Dracos

DETAIL 13-8A

Section d-d

9-AB13-8.1

SKILLING, HELLE, CHRISTIANSEN, ROBERTSON — Structural & Civil Engineers

PROJECT: THE WORLD TRADE CENTER | TITLE: FL 107 - PH CONNECTION DETAILS - FC 107 | DATE: 4-1-70

REVISIONS

5-27-70

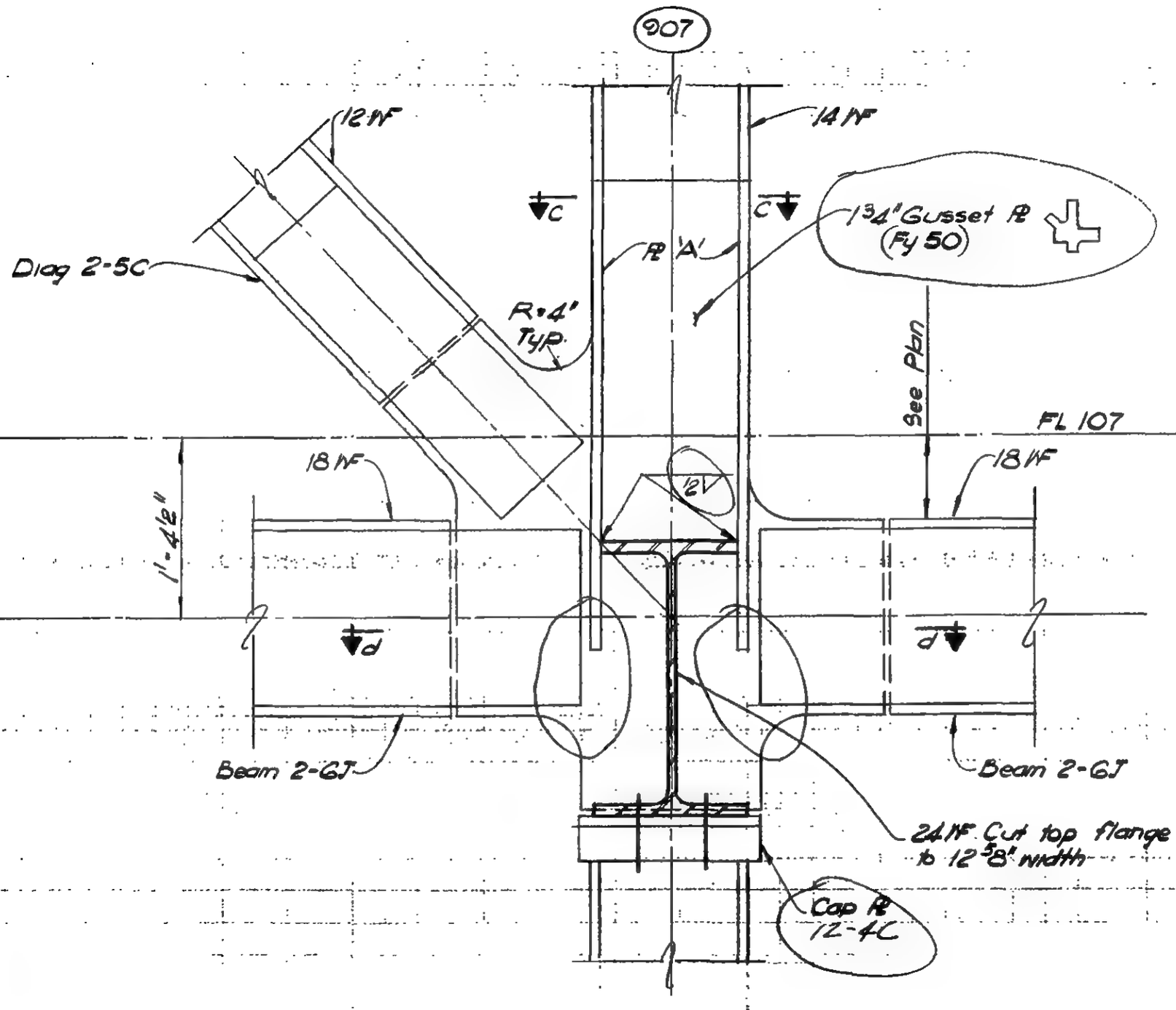

Section 6-6

LICENSED PROFESSIONAL ENGINEER
LESLIE E. ROBERTSON
No. 24860
UNIVERSITY OF THE STATE OF NEW YORK

DESIGNED: H. Von
DRAWN: W. Clarke
REVIEWED: E. Dracos

9-AD/3-8.2

SKILLING, HELLE, CHRISTIANSEN, ROBERTSON — Structural & Civil Engineers

PROJECT: THE WORLD TRADE CENTER | TITLE: FLOOR 107-PH CONNECTION DETAIL - FL 107 | DATE: 4-1-70

REVISIONS
5/27/70
6/17/70
7/8/70

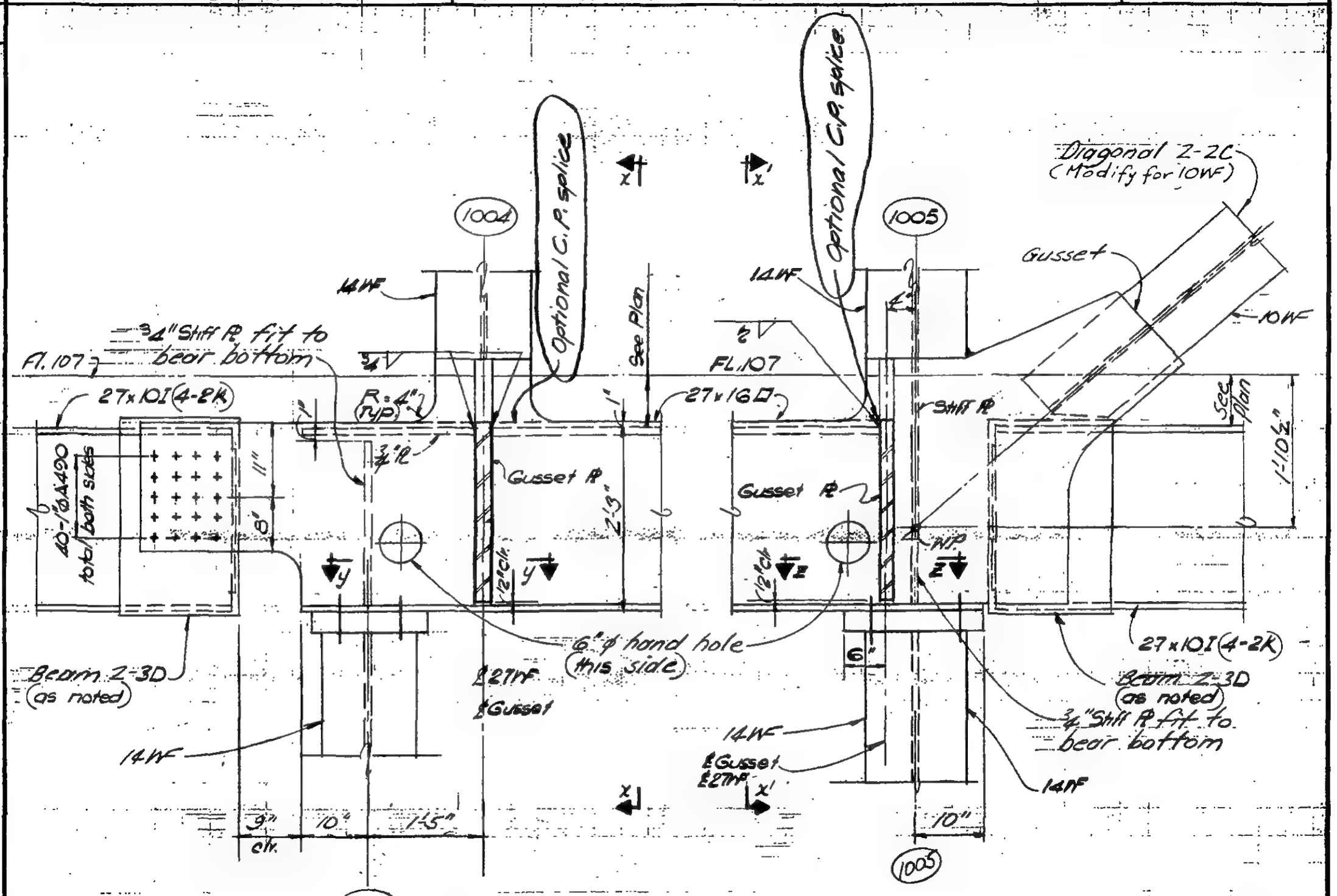

Section N - N

DETAIL 13-9A

Section N - N

DETAIL 13-9C

LICENSED PROFESSIONAL ENGINEER — LESLIE E. ROBERTSON — No. 54560 — UNIVERSITY OF THE STATE OF NEW YORK

DESIGNED L. Quirko
DRAWN J. Adams
REVIEWED E. Drakos

9-A613-9.1

SKILLING, HELLE, CHRISTIANSEN, ROBERTSON — Structural & Civil Engineers

PROJECT: THE WORLD TRADE CENTER | TITLE: FL 107 - PH CONNECTION DETAILS - FL 107 | DATE: 4-1-70

EVISIONS

5/27/70
7/8/70

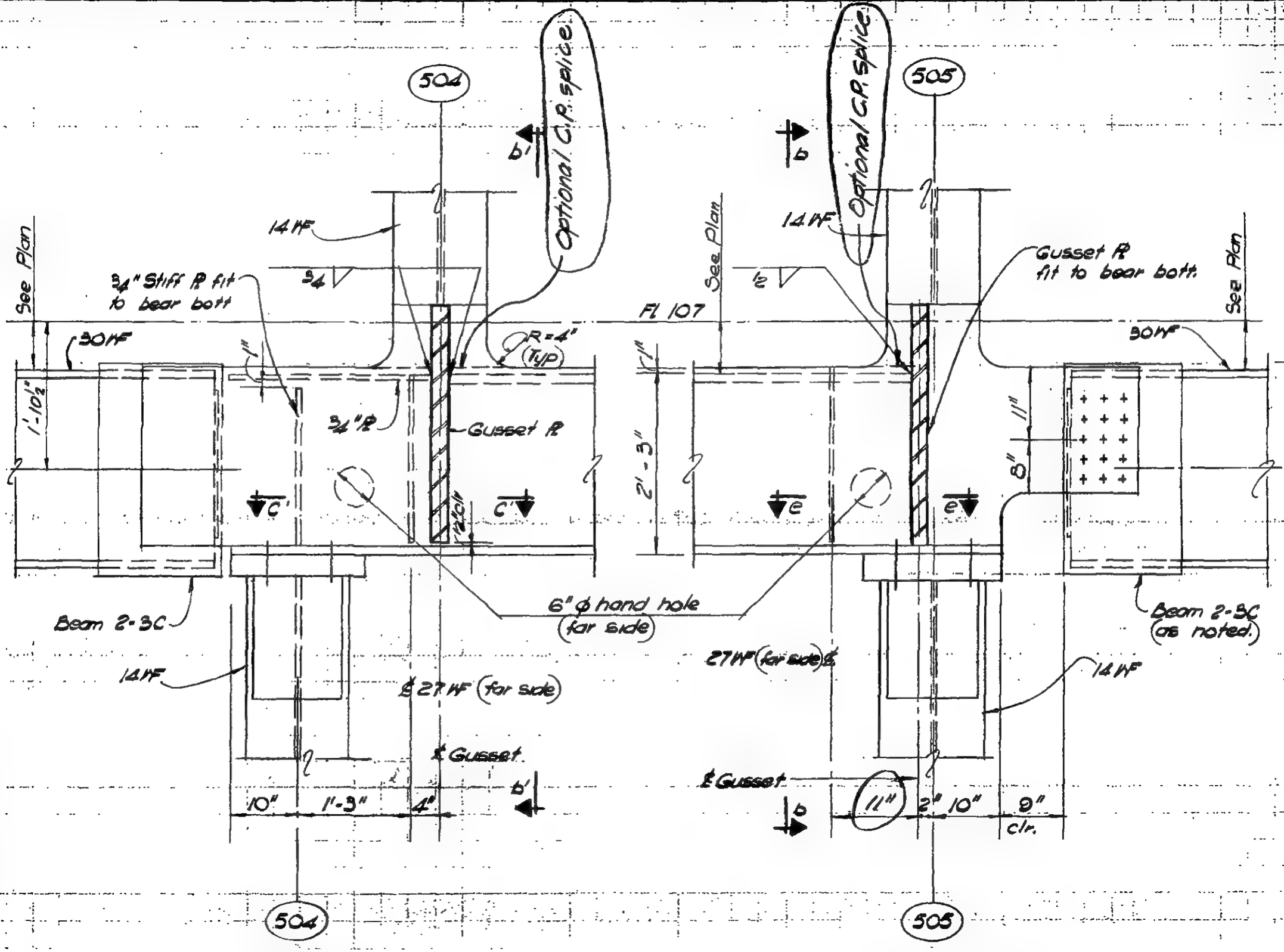

Section a-a
DETAIL 13-9D

Section a-a
DETAIL 13-9E

LICENSED PROFESSIONAL ENGINEER — LESLIE E. ROBERTSON — No. 34360 — UNIVERSITY OF THE STATE OF NEW YORK

DESIGNED: L. Quirk
DRAWN: W. Clarke
REVIEWED: E. Drakos

9-AB/3-9.2

SKILLING, HELLE, CHRISTIANSEN, ROBERTSON — Structural & Civil Engineers

PROJECT: THE WORLD TRADE CENTER

TITLE: FL 107 - PH CONNECTION DETAILS - FL 107

DATE: 4-1-70

REVISIONS

5/27/70

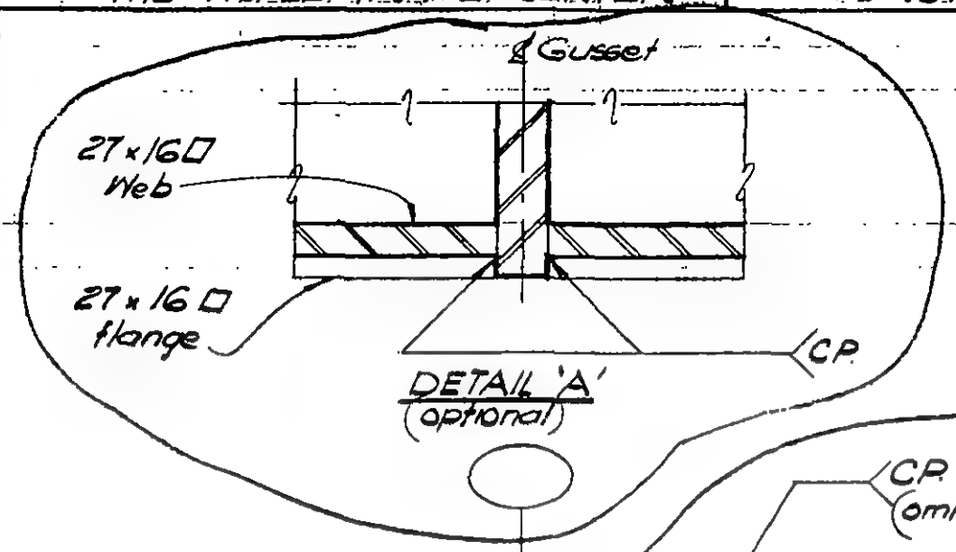

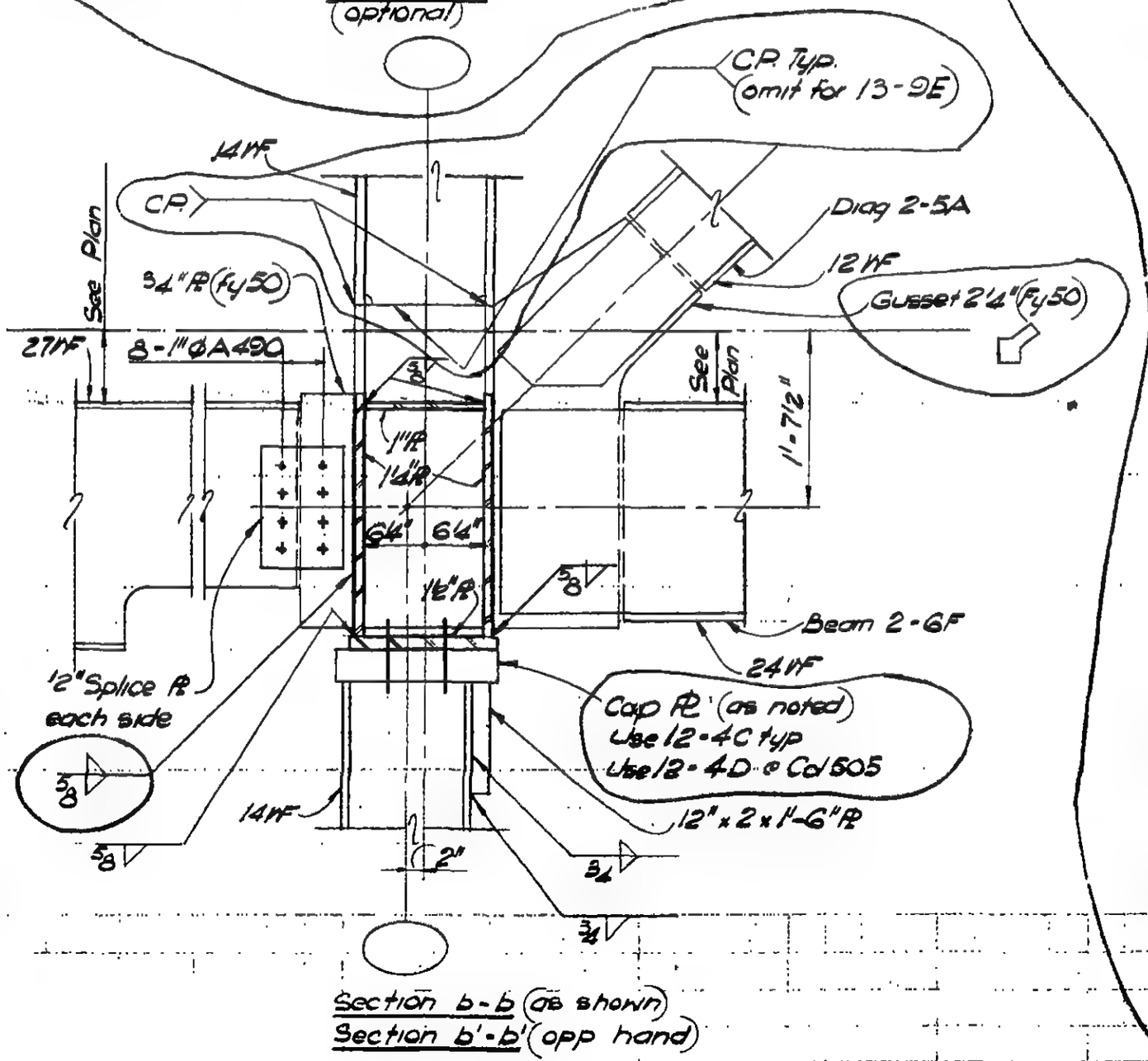

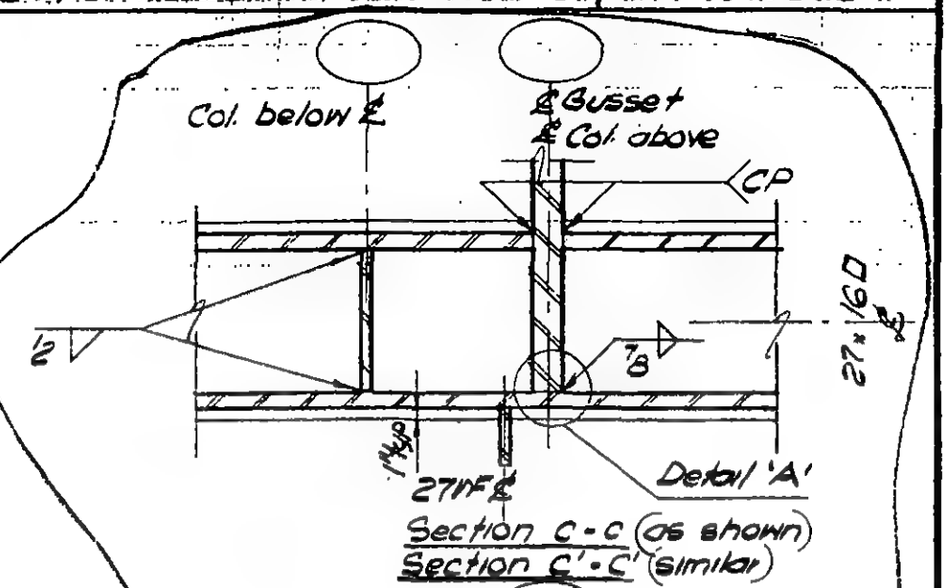

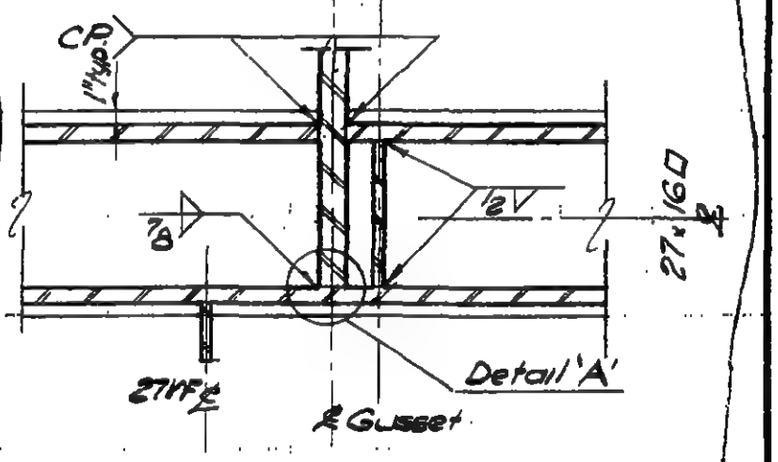

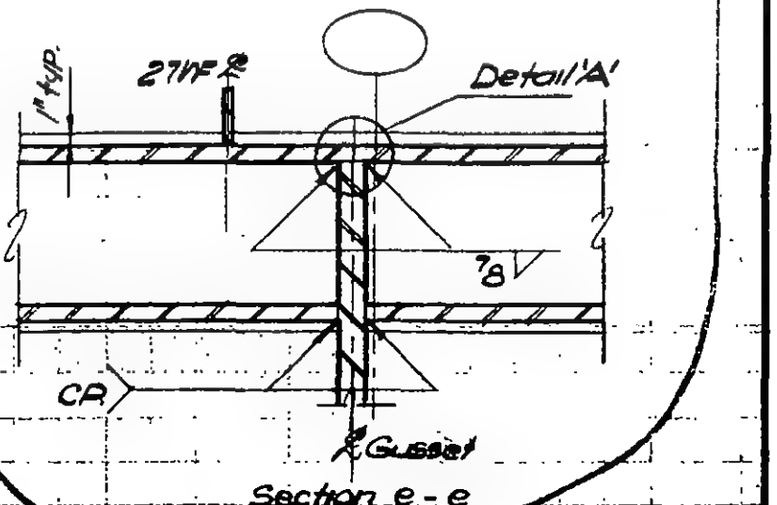

LICENSED PROFESSIONAL ENGINEER
LESLIE E. ROBERTSON
No. 34860
UNIVERSITY OF THE STATE OF NEW YORK

DESIGNED: J. Quirko

DRAWN: M. Clarke

REVIEWED: E. Dramos

9-AB/3-9.3

SKILLING, HELLE, CHRISTIANSEN, ROBERTSON — Structural & Civil Engineers

PROJECT THE WORLD TRADE CENTER | TITLE FL. 107-PH CONNECTION DETAIL-FL 107 | DATE 4-1-70

REVISIONS

5/27/70

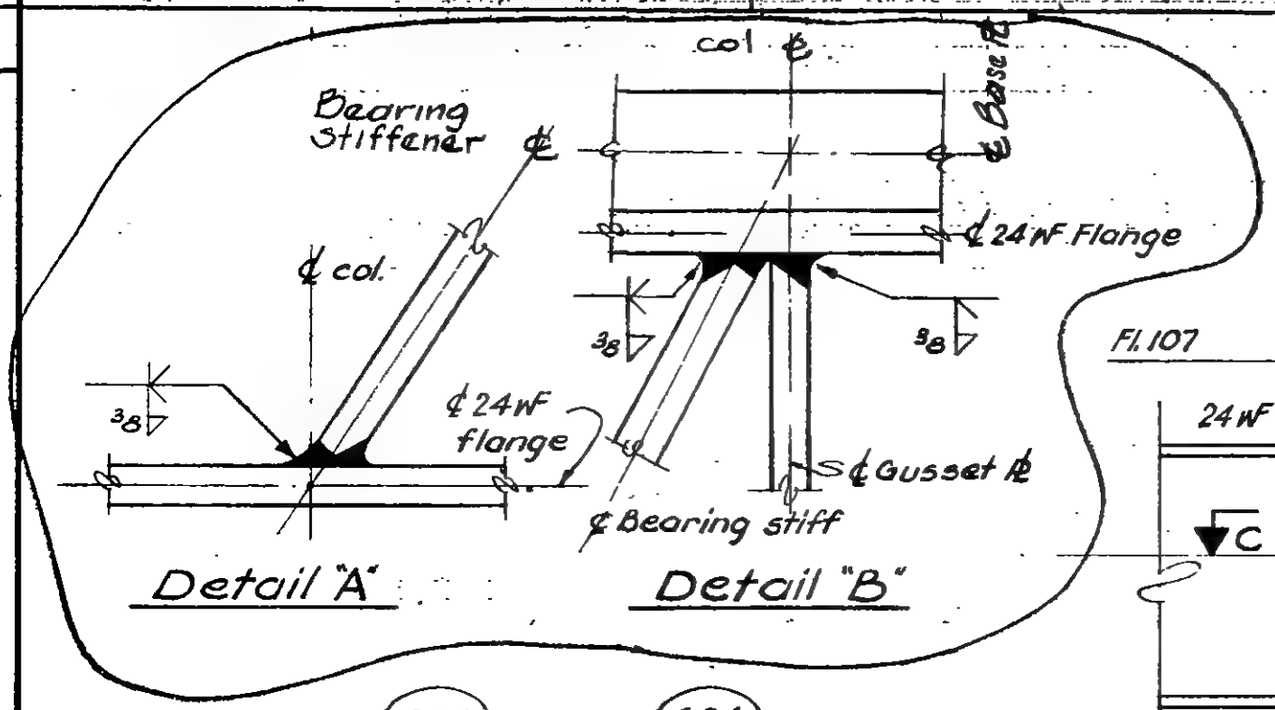

Detail "A"

Detail "B"

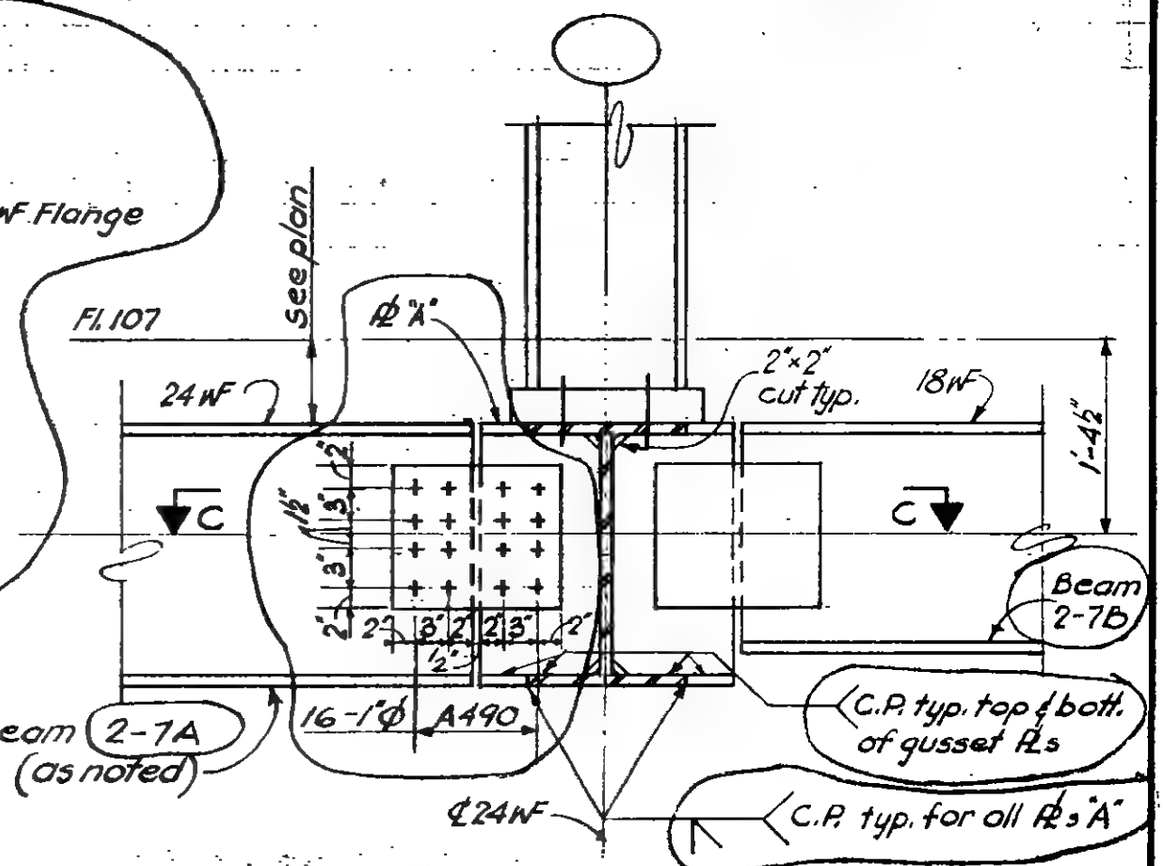

Section b-b

Section b-b opp. hand

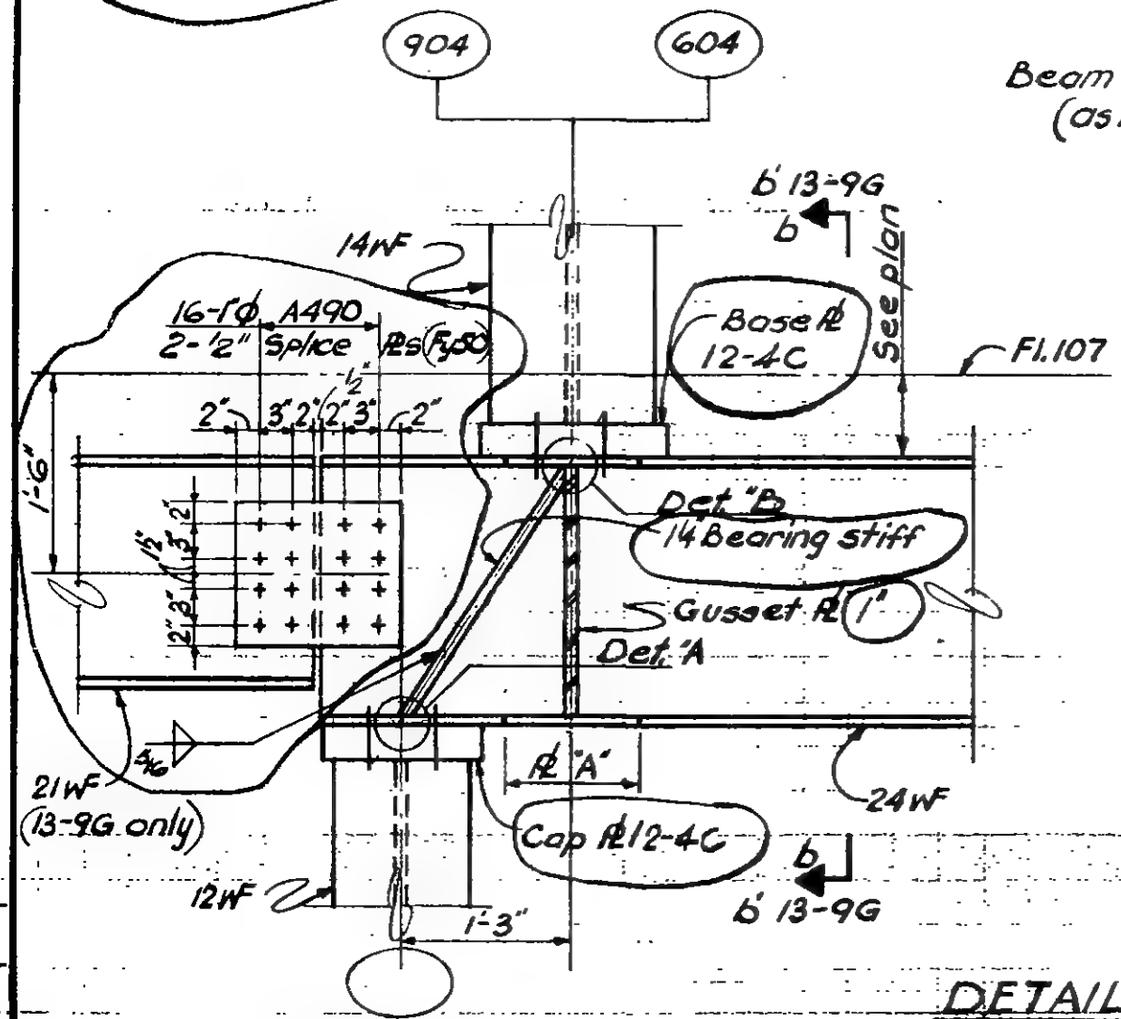

Section a-a

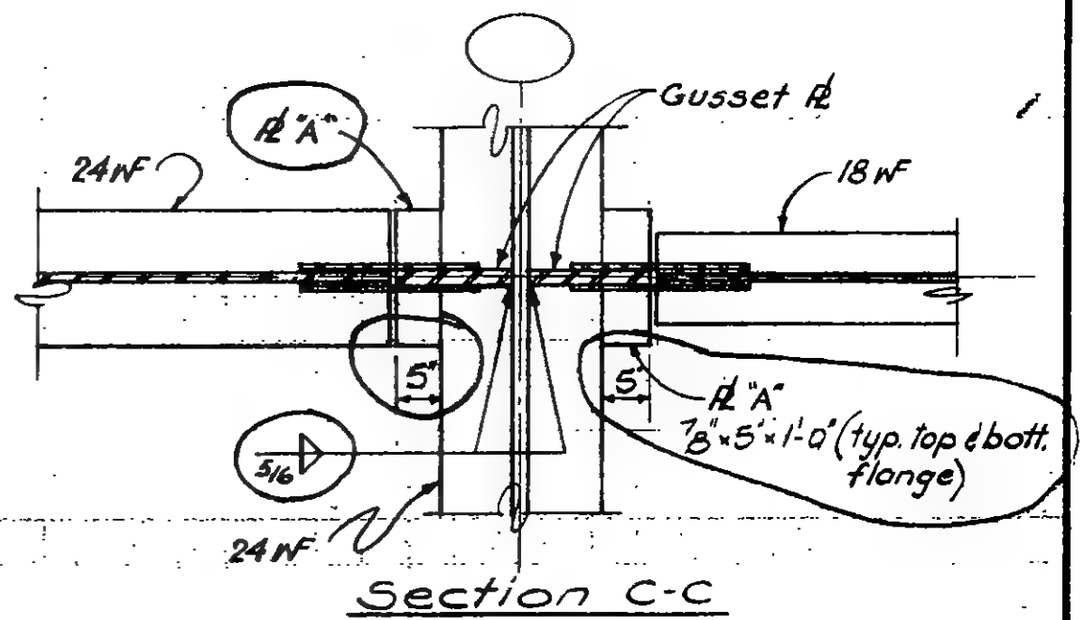

Section C-C

DETAIL 13-9F

DETAIL 13-9G (as noted)

9-AB13-9.4

LICENSED PROFESSIONAL ENGINEER — LESLIE E. ROBERTSON — No. 34360 — UNIVERSITY OF THE STATE OF NEW YORK

SIGNED J. Quirko

DRAWN D. Huggins

REVIEWED E. Oravos

SKILLING, HELLE, CHRISTIANSEN, ROBERTSON — Structural & Civil Engineers

PROJECT: THE WORLD TRADE CENTER | TITLE: FL 107 - PH CONNECTION DETAILS - FL 107 | DATE: 4-1-70

REVISIONS

5/27/70
7/15/70

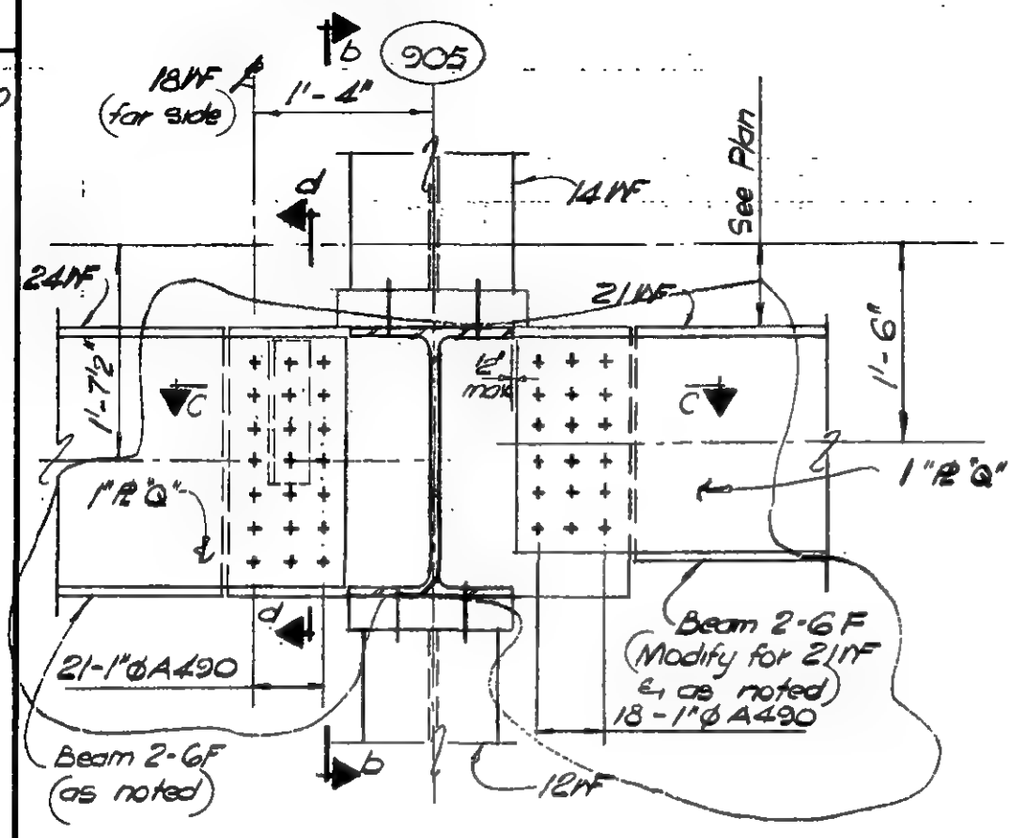

Section a-a

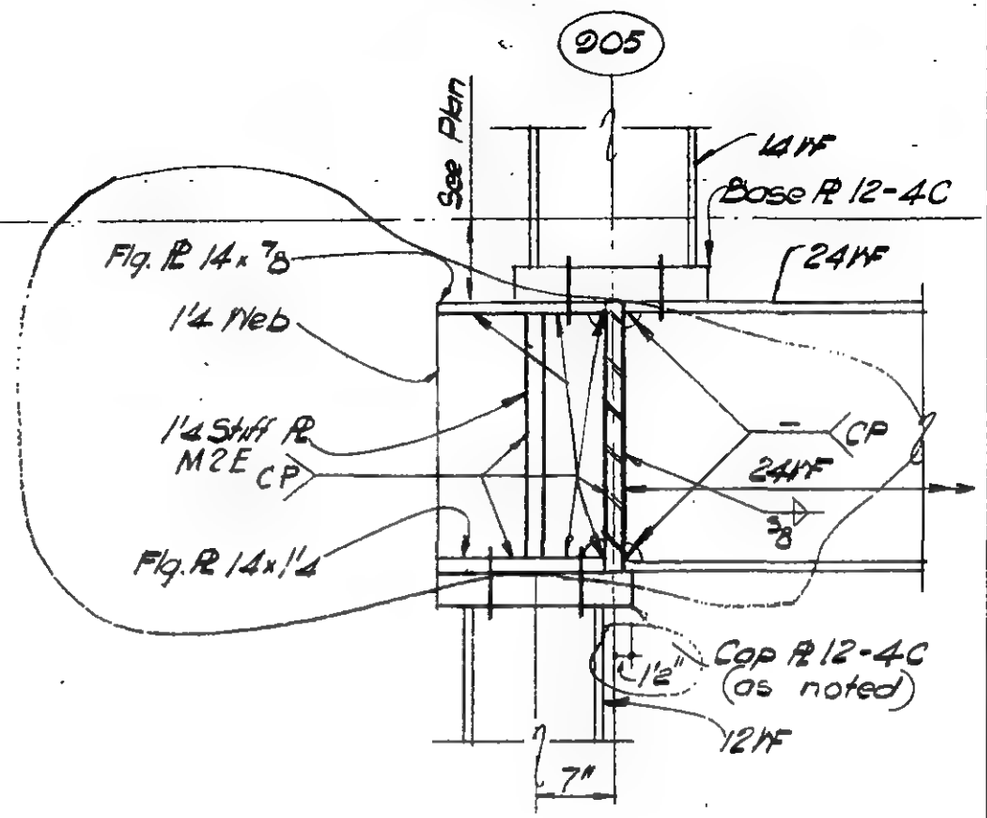

Section b-b

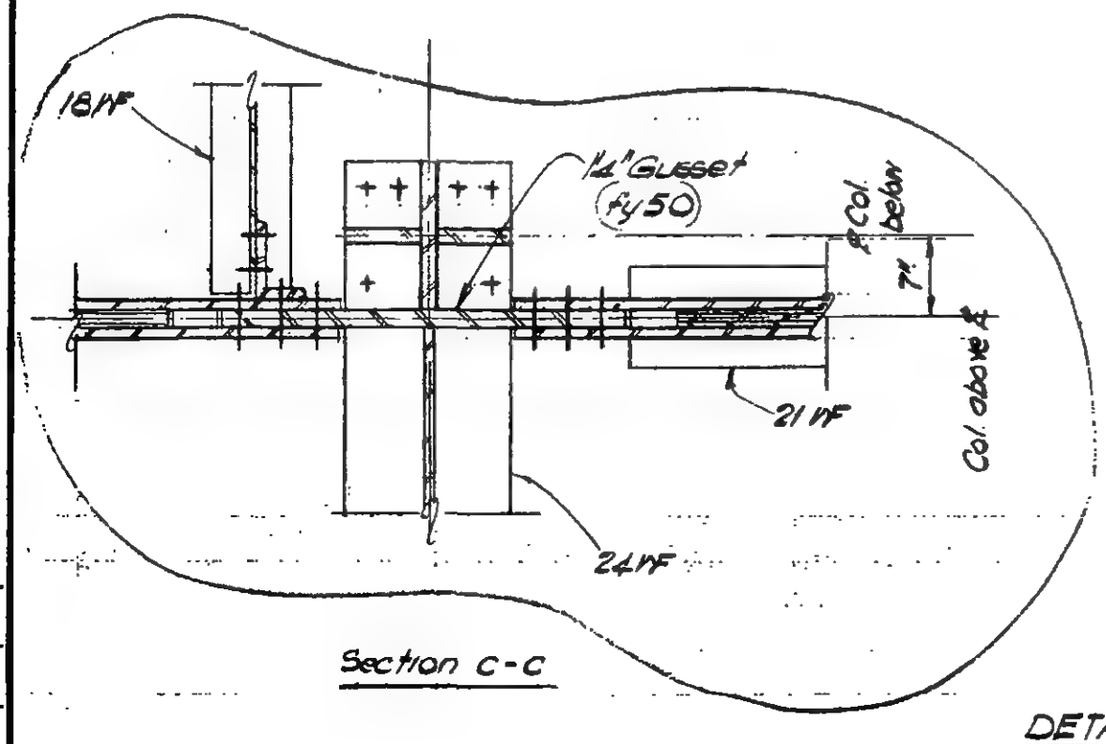

Section c-c

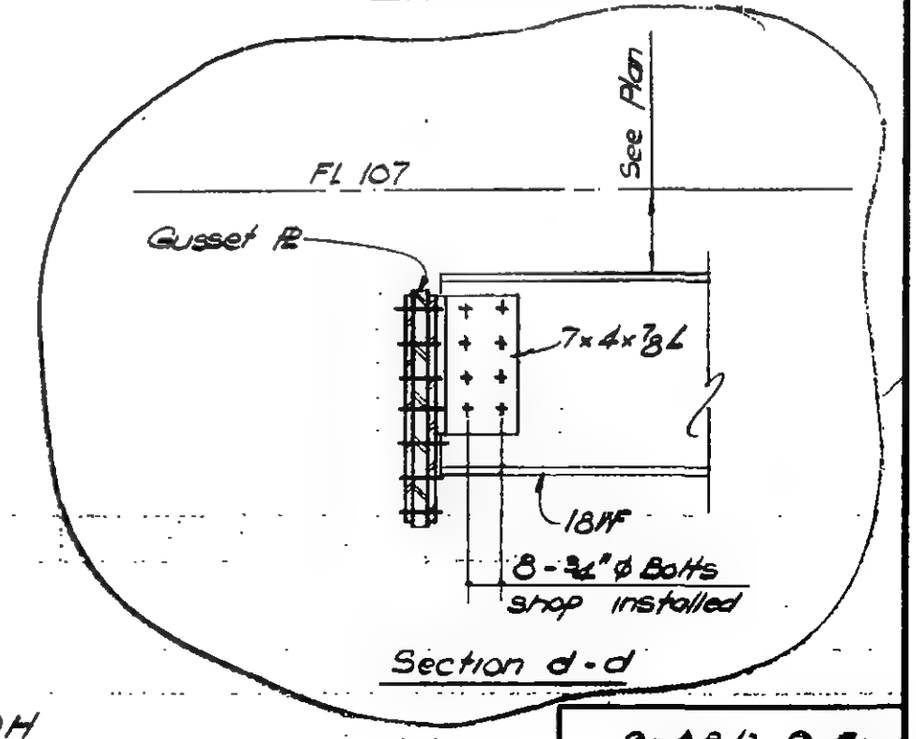

Section d-d

DETAIL 13-9H

LICENSED PROFESSIONAL ENGINEER — LESLIE E. ROBERTSON — No. 34860 — UNIVERSITY OF THE STATE OF NEW YORK

DESIGNED: J. Quirko
DRAWN: W. Clarke
REVIEWED: E. Dracos

9-AB13-9.5

SKILLING, HELLE, CHRISTIANSEN, ROBERTSON — Structural & Civil Engineers

PROJECT: THE WORLD TRADE CENTER | TITLE: FL. 107 - PH. CONNECTION DETAILS - FL 107 | DATE: 4-1-'70

REVISIONS
5/27/70

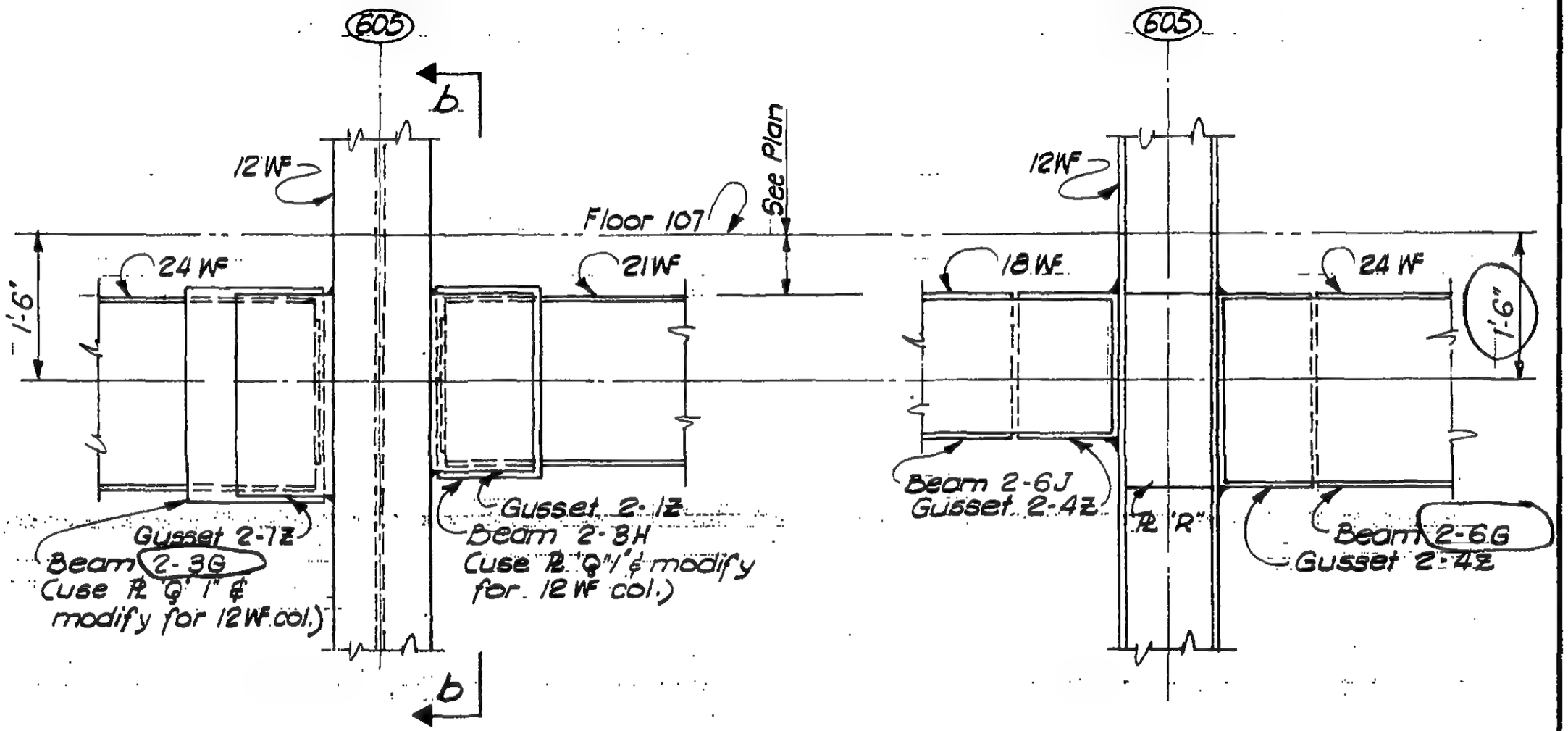

Section a-a

Section b-b

Detail 13-9K

LICENSED PROFESSIONAL ENGINEER — LESLIE E. ROBERTSON — No. 34360 — UNIVERSITY OF THE STATE OF NEW YORK

DESIGNED: J. Quirk
DRAWN: M. Nichols
REVIEWED: E. Drakos

9-AB13-9.6

SKILLING, HELLE, CHRISTIANSEN, ROBERTSON — Structural & Civil Engineers

PROJECT: THE WORLD TRADE CENTER | TITLE: FL 107 - PH CONNECTION DETAILS - FL 107 | DATE: 6-17-70

REVISIONS

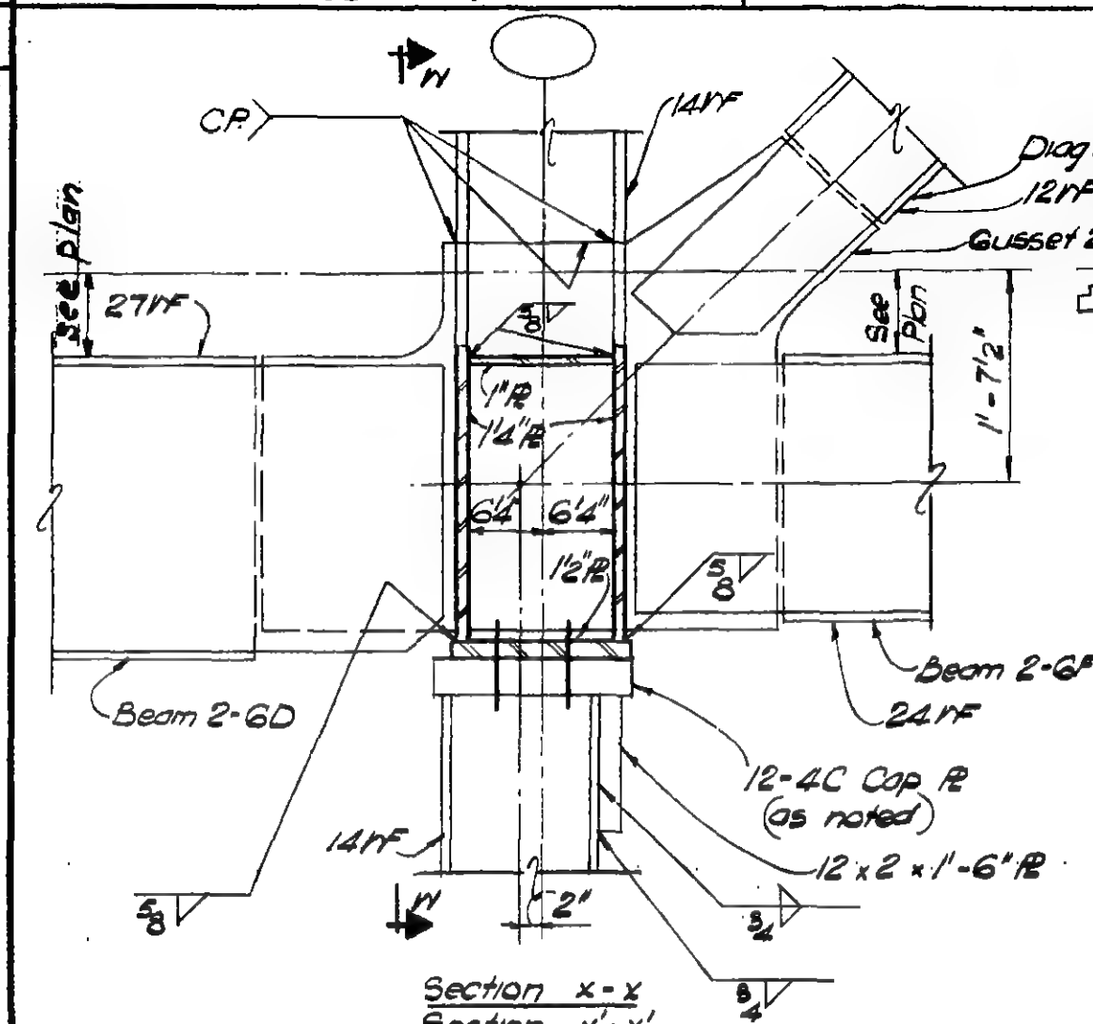

Section x-x
Section x'-x'

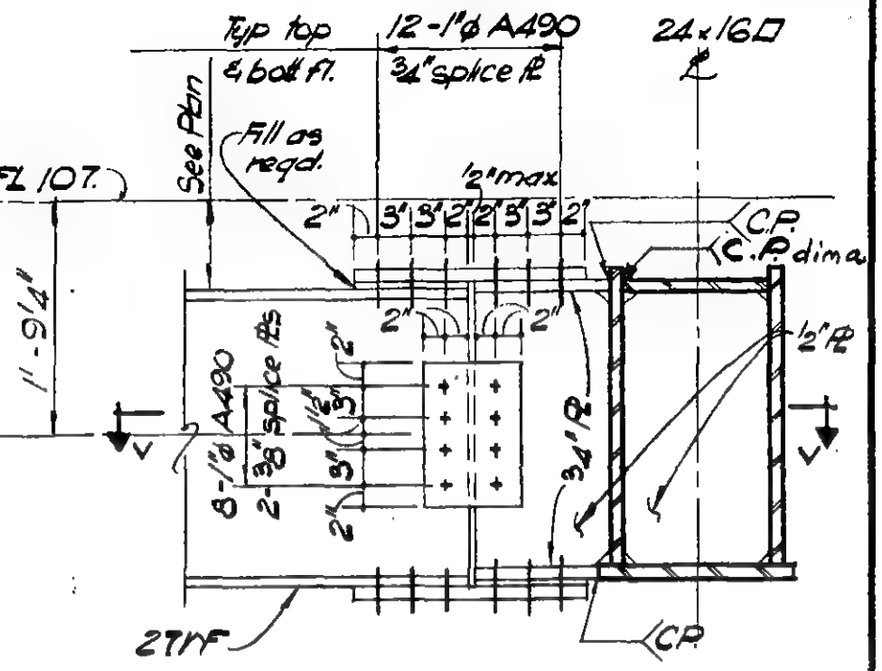

Section u-u

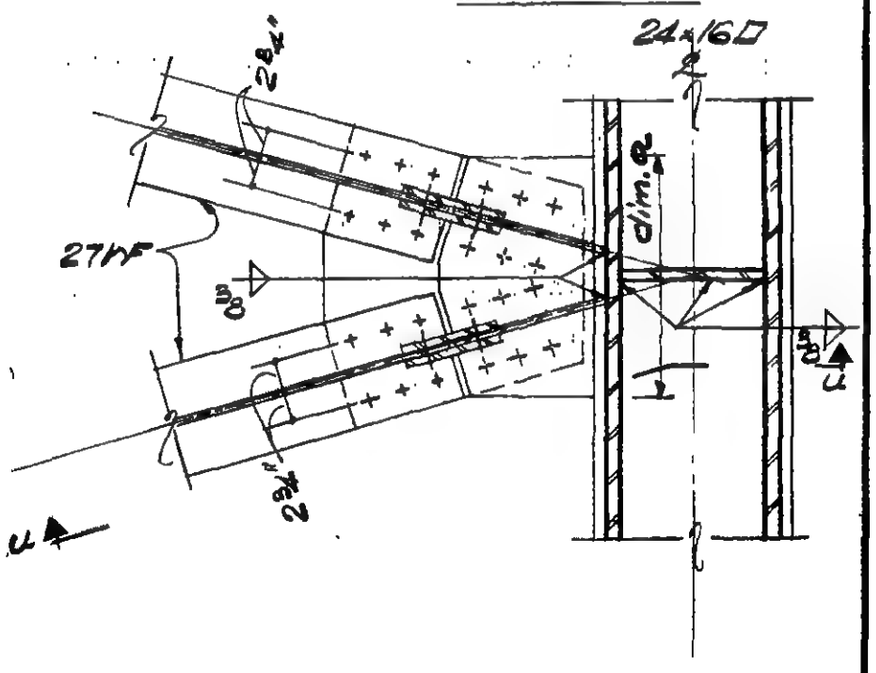

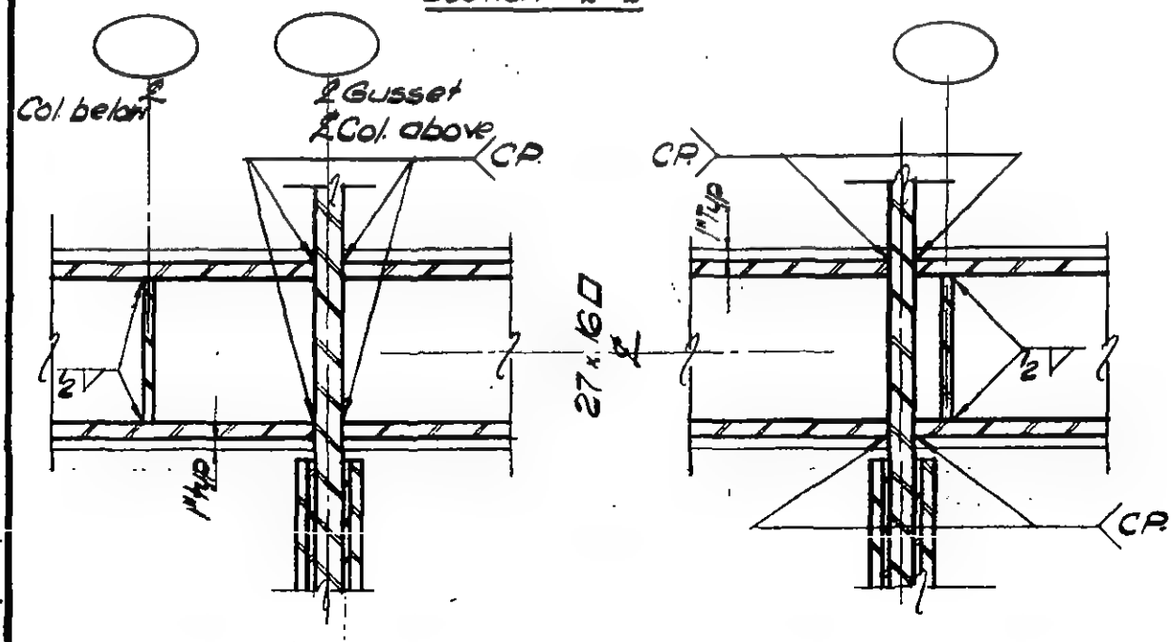

Section y-y

Section z-z

Section v-v

DETAIL 13-M

LICENSED PROFESSIONAL ENGINEER
LESLIE E. ROBERTSON
No 34360
UNIVERSITY OF THE STATE OF NEW YORK

DESIGNED

DRAWN
W. Clarke

REVIEWED

9-AB13-9.7

SKILLING, HELLE, CHRISTIANSEN, ROBERTSON — Structural & Civil Engineers

PROJECT: THE WORLD TRADE CENTER | TITLE: FLOOR 107-PH CONNECTION DETAIL - FL 107 | DATE: 8-3-70

REVISIONS

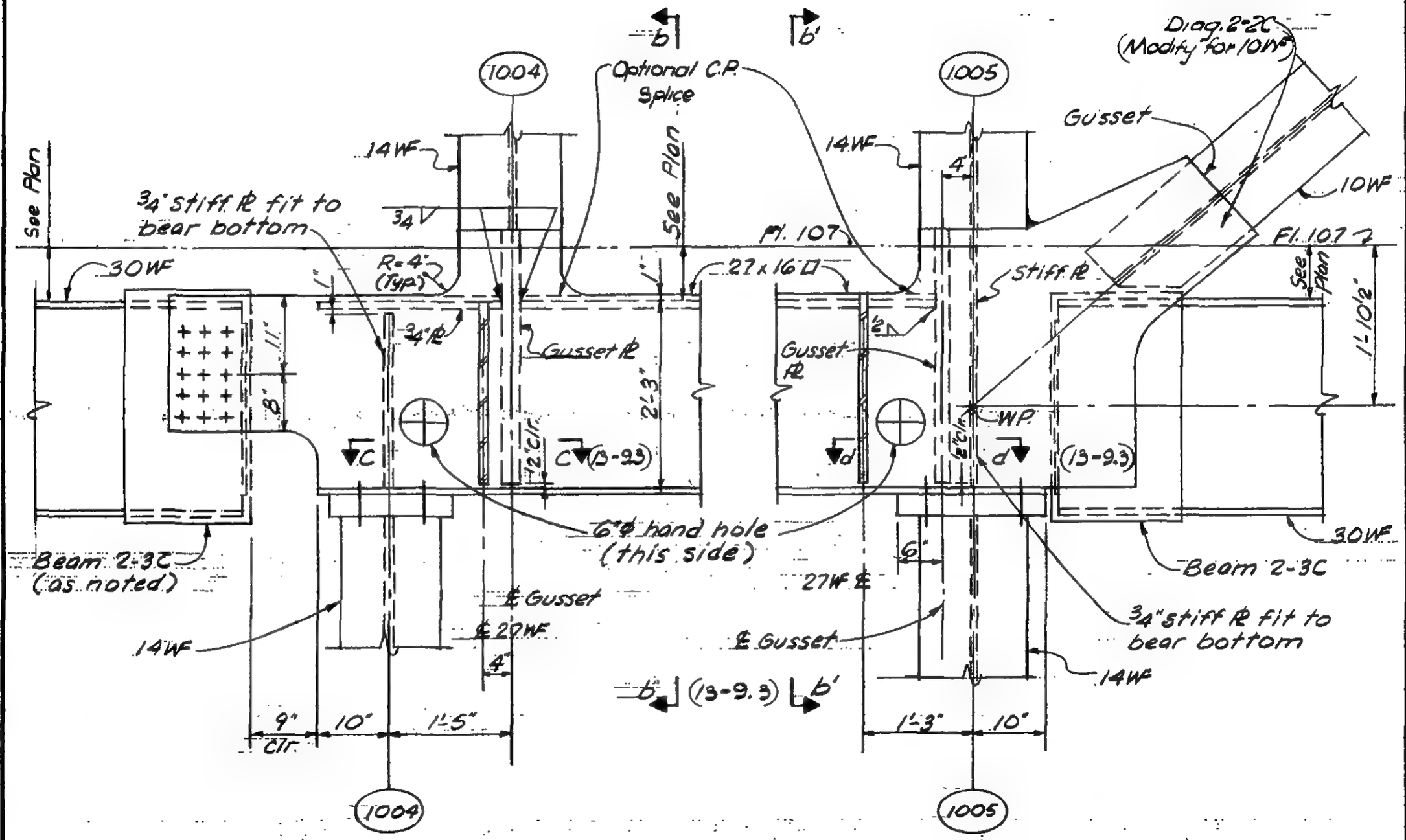

LICENSED PROFESSIONAL ENGINEER — LESLIE E. ROBERTSON — No. 34360 — UNIVERSITY OF THE STATE OF NEW YORK

DESIGNED

DRAWN A. FRANQUI

REVIEWED

9-B 13-9.8

SKILLING, HELLE, CHRISTIANSEN, ROBERTSON — Structural & Civil Engineers

PROJECT: THE WORLD TRADE CENTER

TITLE: FLOOR 107-PH CONNECTION DETAIL - FL 107

DATE: 4-1-70

REVISIONS

5/27/70

7/8/70

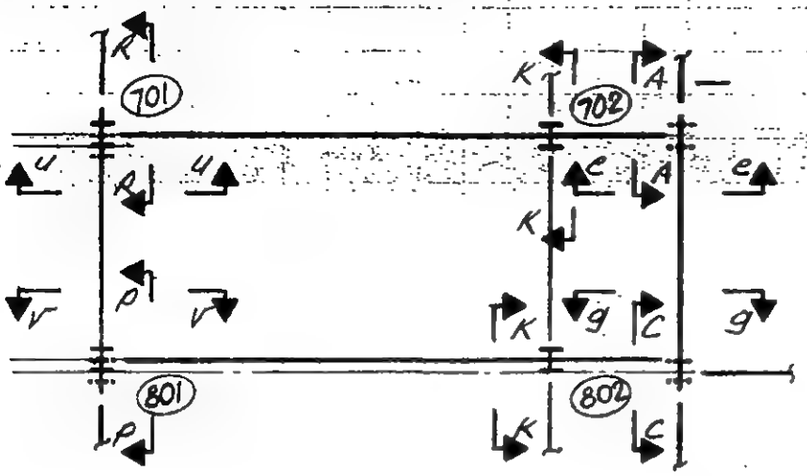

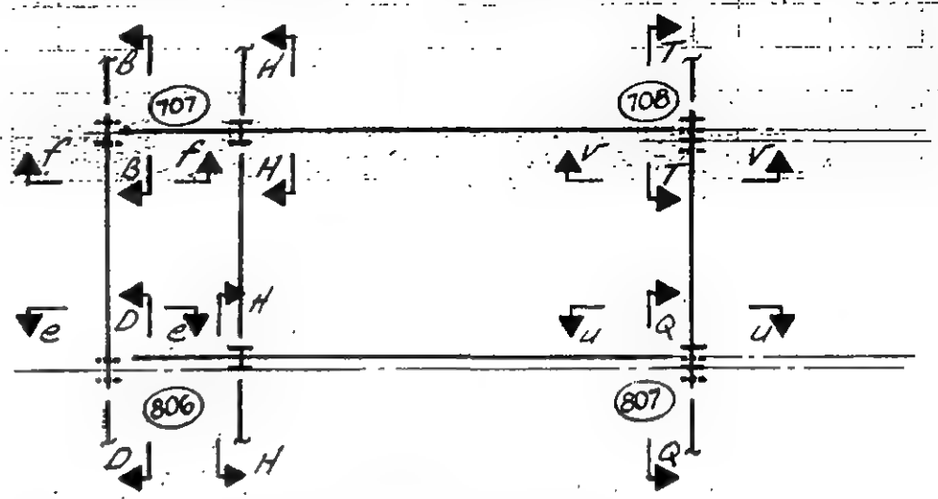

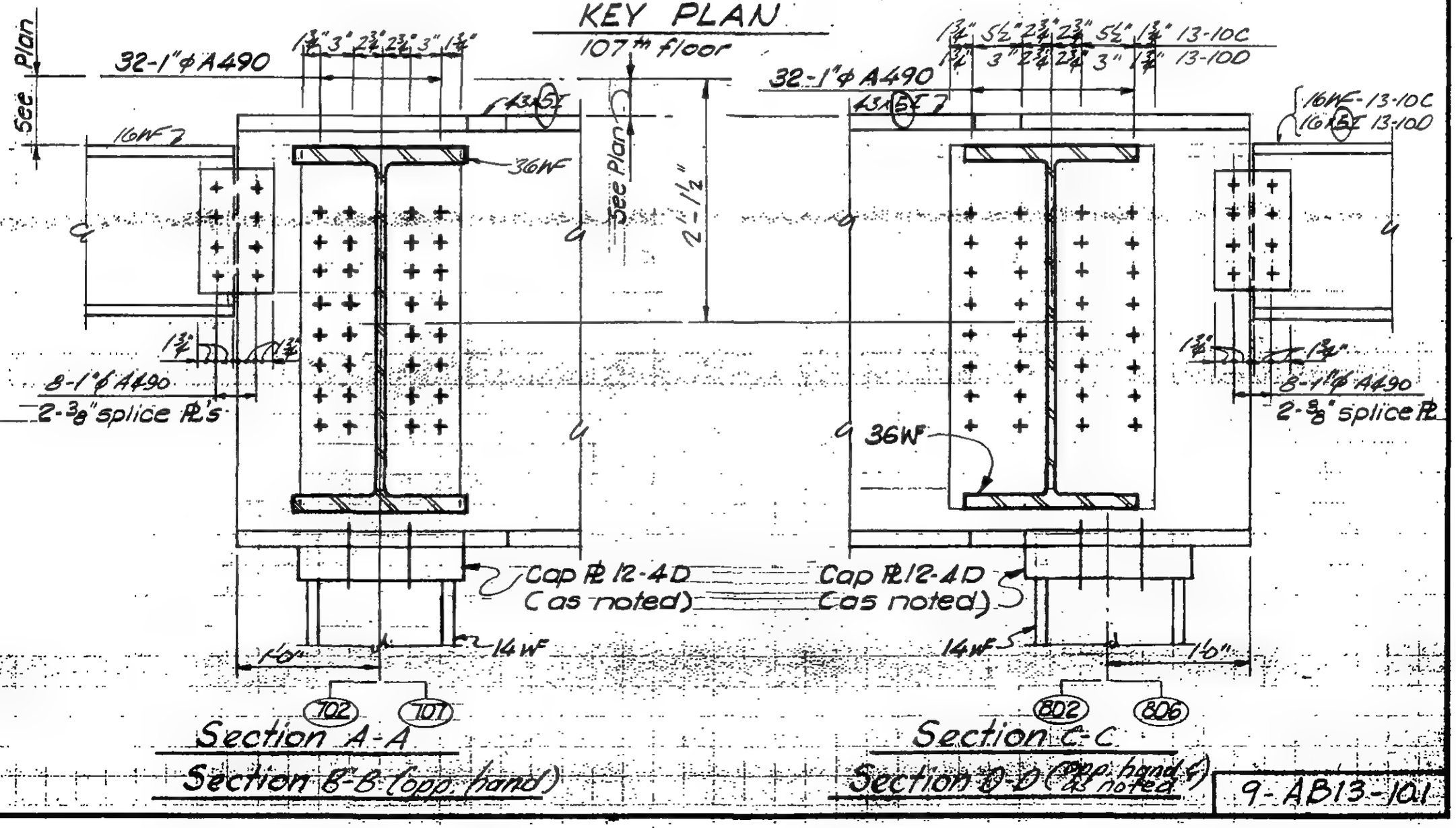

DESIGNED: J. Quirko

DRAWN: J. Gricius

REVIEWED: E. Dracos

9-AB13-101

SKILLING, HELLE, CHRISTIANSEN, ROBERTSON — Structural & Civil Engineers

PROJECT: THE WORLD TRADE CENTER | TITLE: FL. 107-PH CONNECTION DETAIL - FL 107 | DATE: 4-1-70

REVISIONS

5/27/70
7/8/70

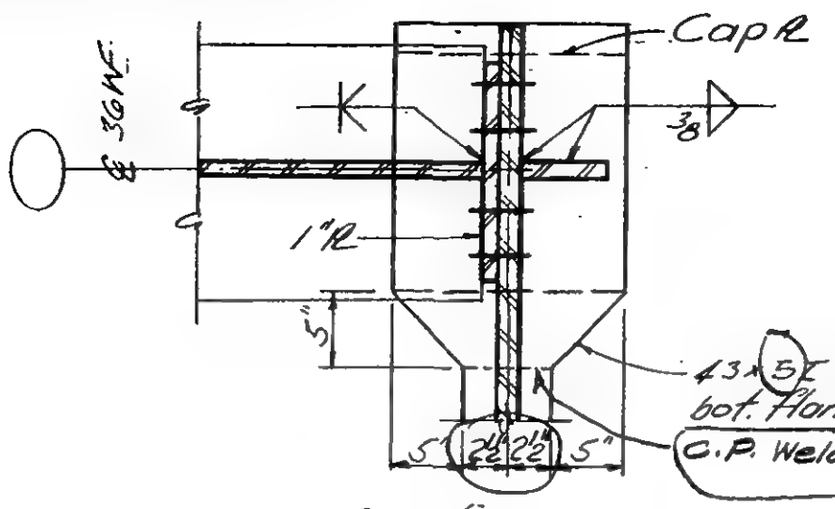

Section x-x

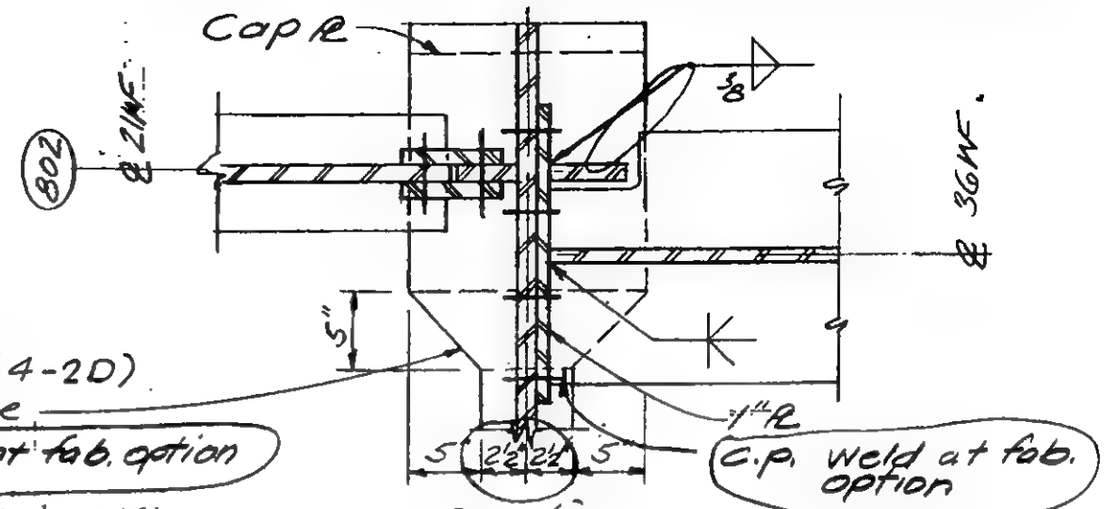

Section y-y

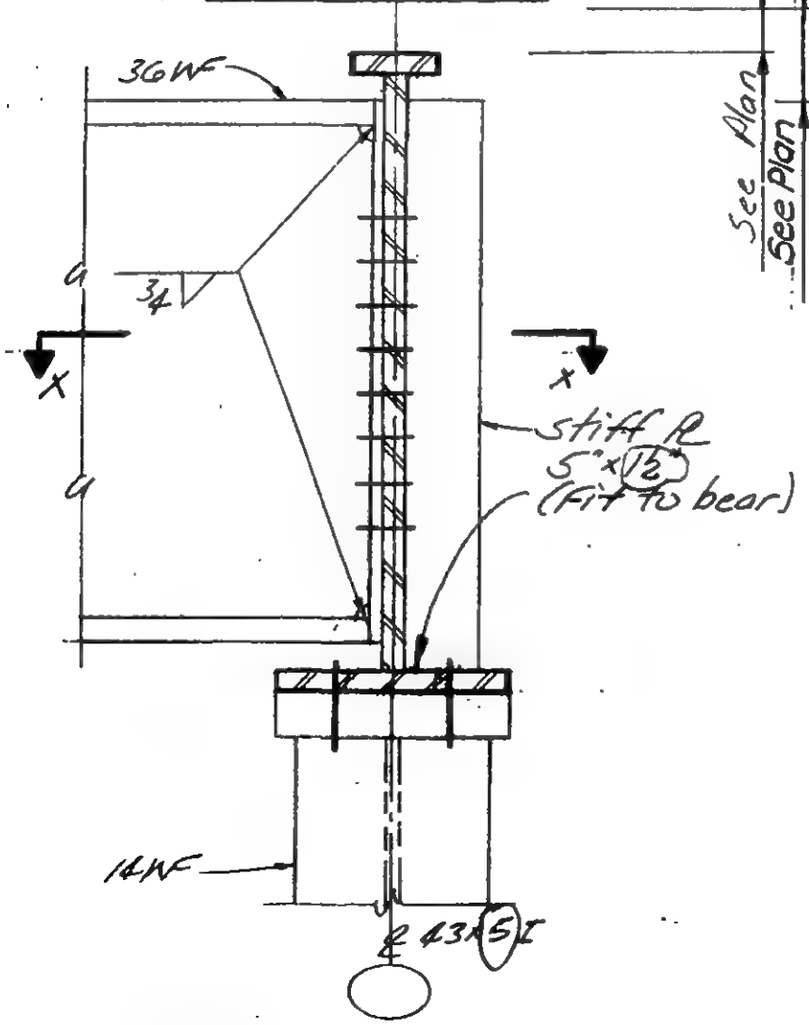

Section e-e
Section f-f (opp. hand)

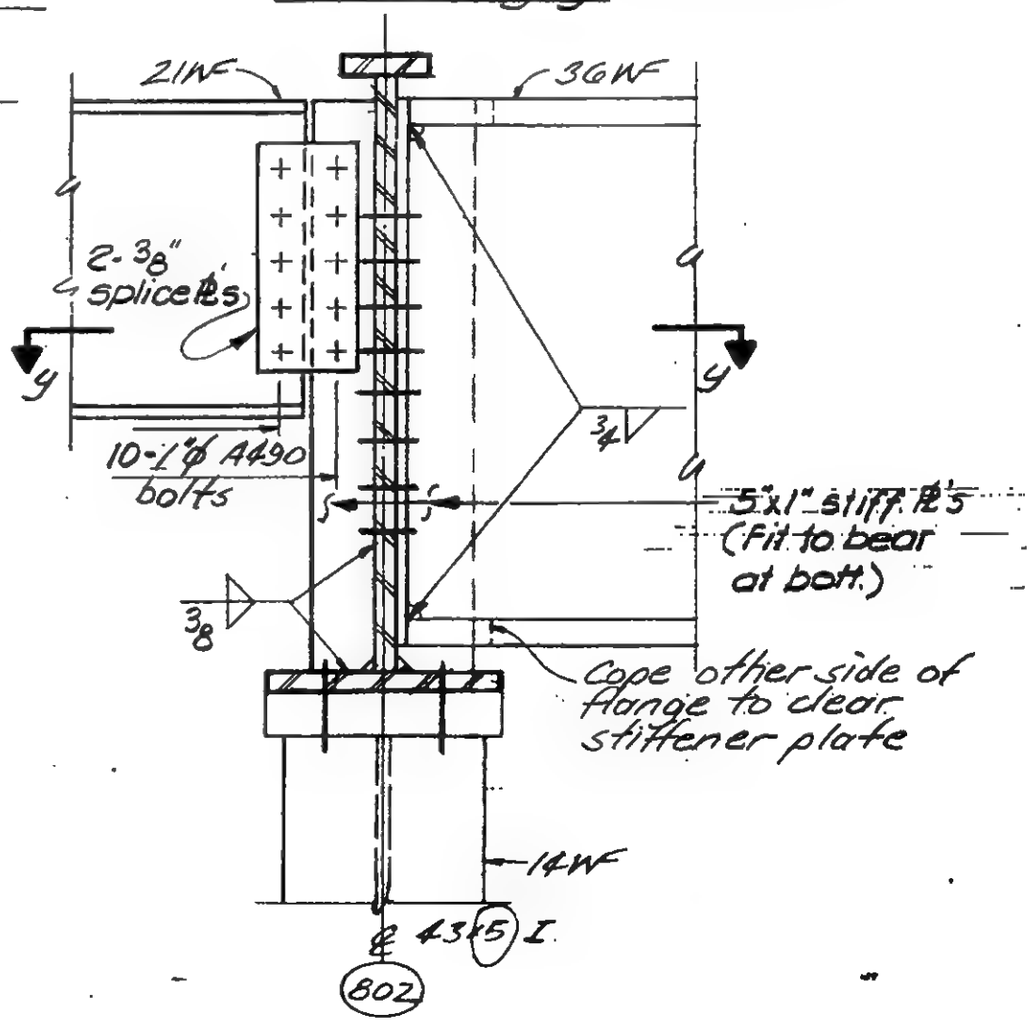

Section g-g

℄ FL 107

LICENSED PROFESSIONAL ENGINEER — LESLIE E. ROBERTSON — No. 34960 — UNIVERSITY OF THE STATE OF NEW YORK

DESIGNED: L. Quirko
DRAWN: J. Gricius
REVIEWED: E. Dracos

9-AB13-10.2

SKILLING, HELLE, CHRISTIANSEN; ROBERTSON — Structural & Civil Engineers

PROJECT: THE WORLD TRADE CENTER

TITLE: FL 107 - PH CONNECTION DETAIL - FL 107

DATE: 4-1-70

REVISIONS

5/27/70

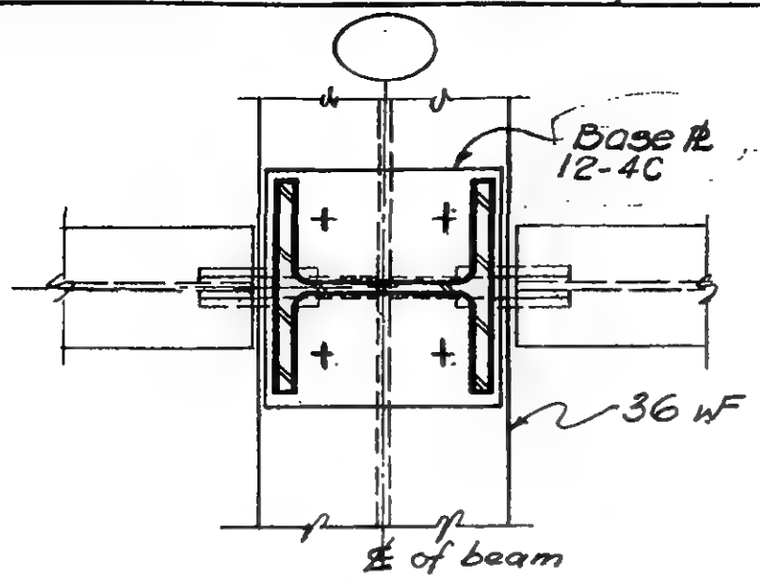

Section m-m

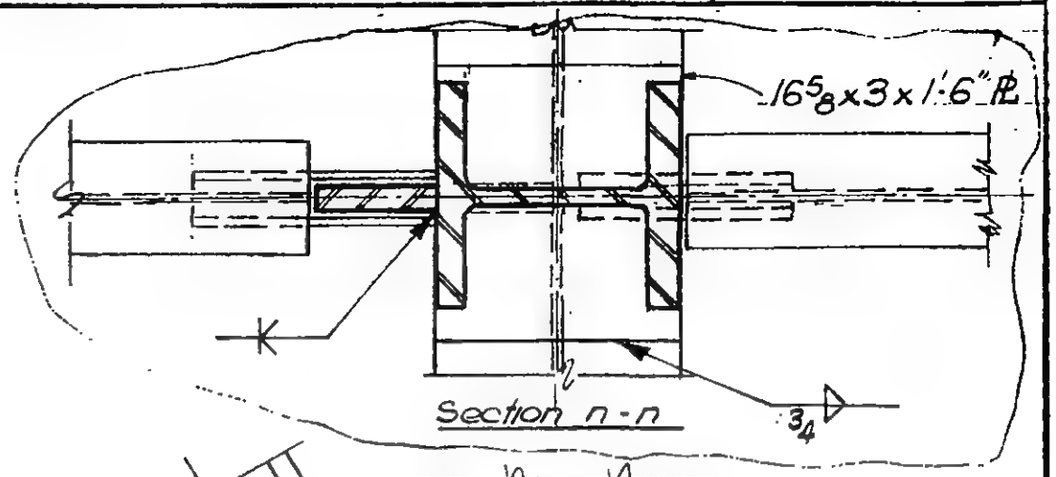

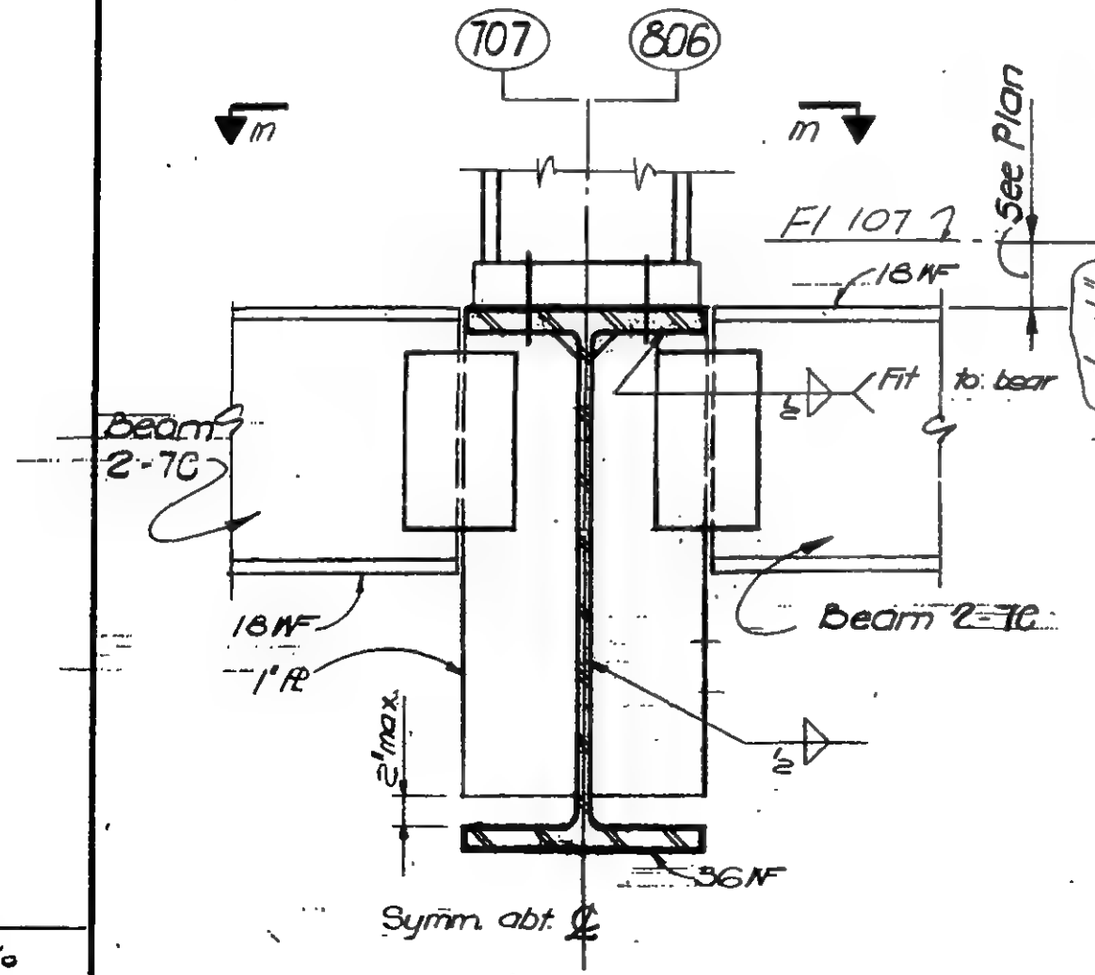

Section H-H

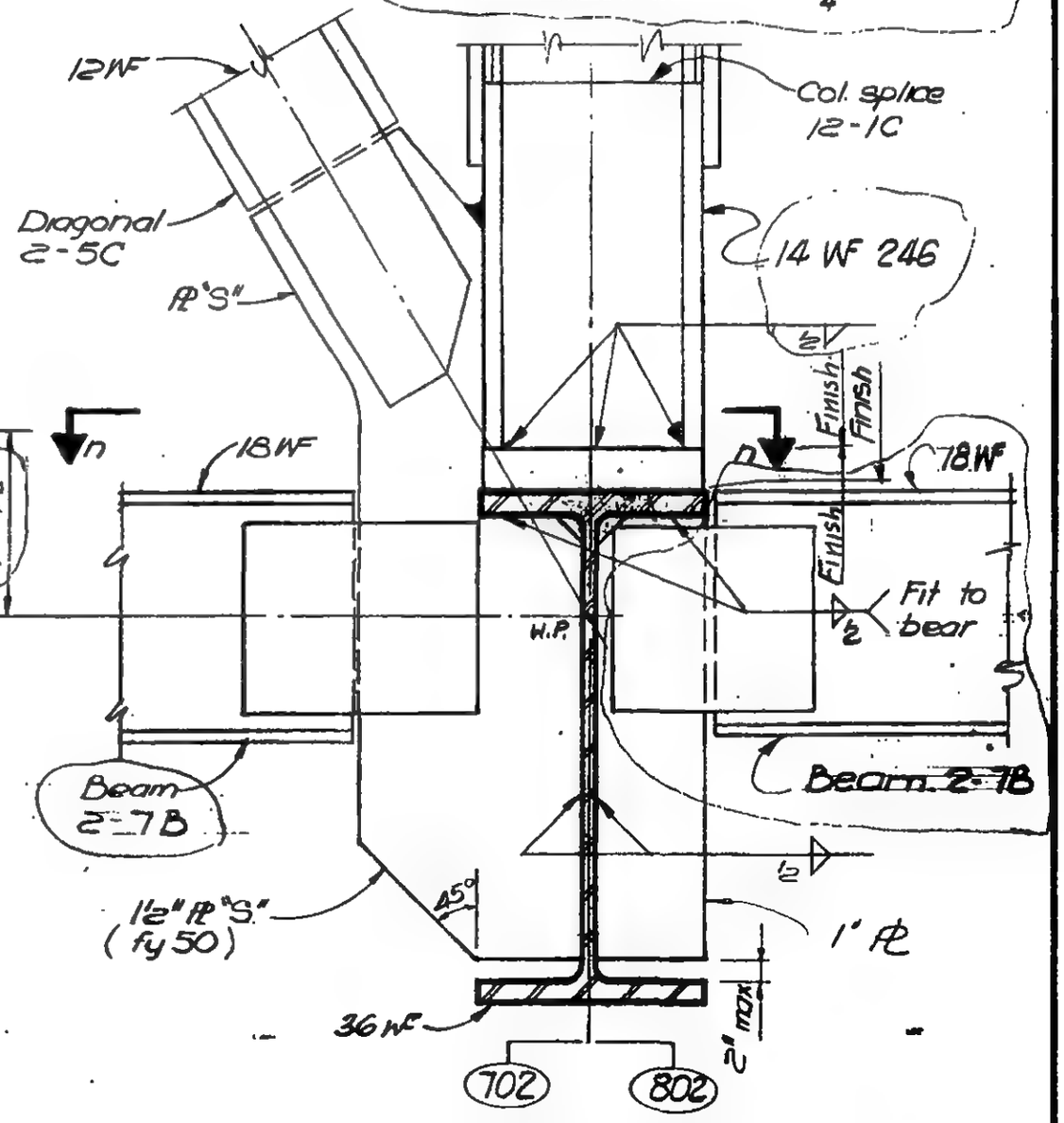

Section K-K

DESIGNED: L. Quirke
DRAWN: J. Gricius
REVIEWED: E. Drakos

9-AB13-10.3

SKILLING, HELLE, CHRISTIANSEN, ROBERTSON — Structural & Civil Engineers

PROJECT: THE WORLD TRADE CENTER | TITLE: FLOOR 107 PH CONNECTION DETAIL - FL 107 | DATE: 4-1-70

REVISIONS

5/27/70

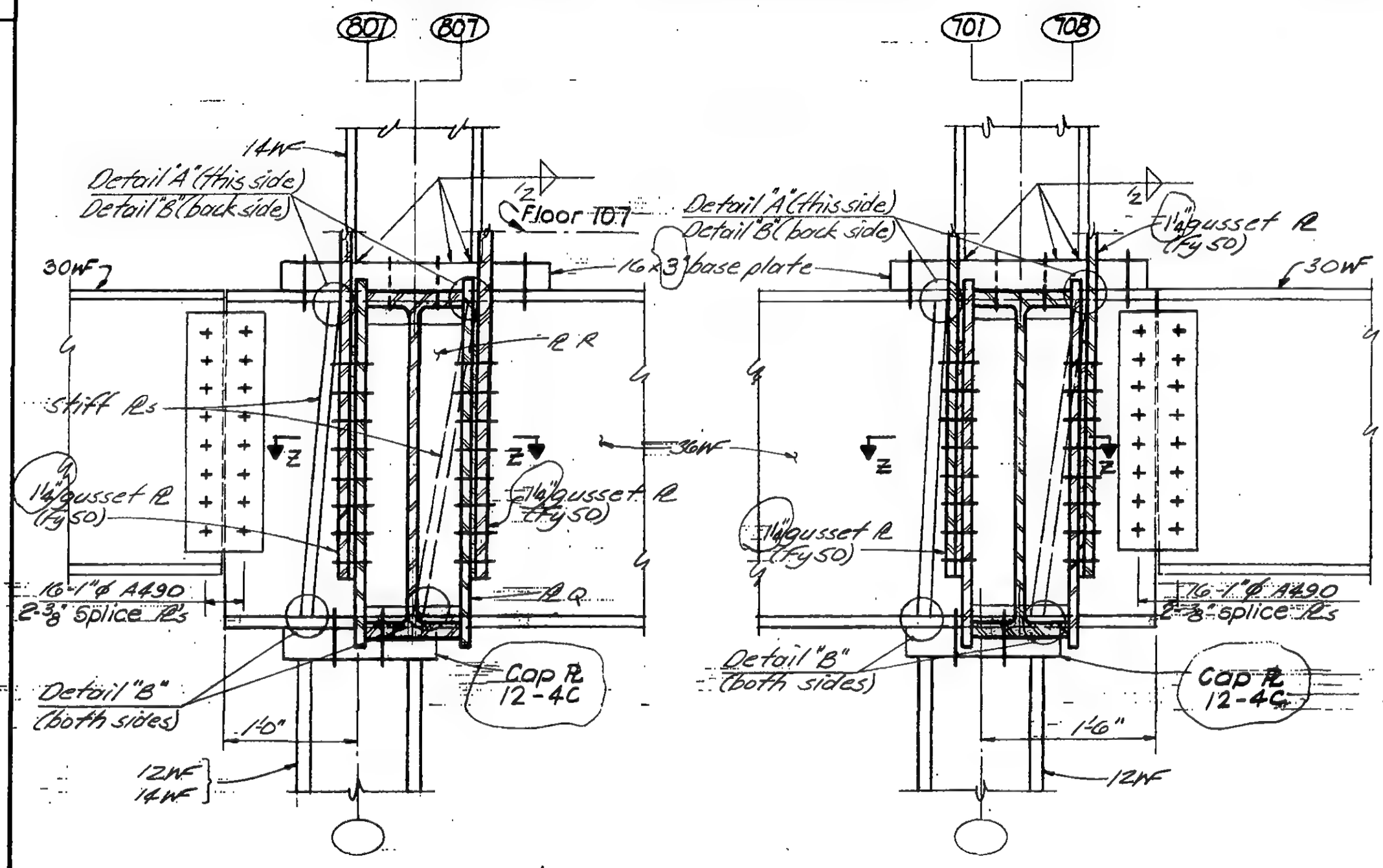

Section P-P
Section Q-Q (opp. hand)

Section R-R
Section T-T (opp. hand)

DESIGNED: L. Quirke
DRAWN: J. Gricius
REVIEWED: E. Drakos

9-AB13-104

SKILLING, HELLE, CHRISTIANSEN, ROBERTSON — Structural & Civil Engineers

PROJECT: THE WORLD TRADE CENTER | TITLE: FLOOR 107-PH CONNECTION DETAIL - FL 107 | DATE: 4-1-70

REVISIONS

5/27/70

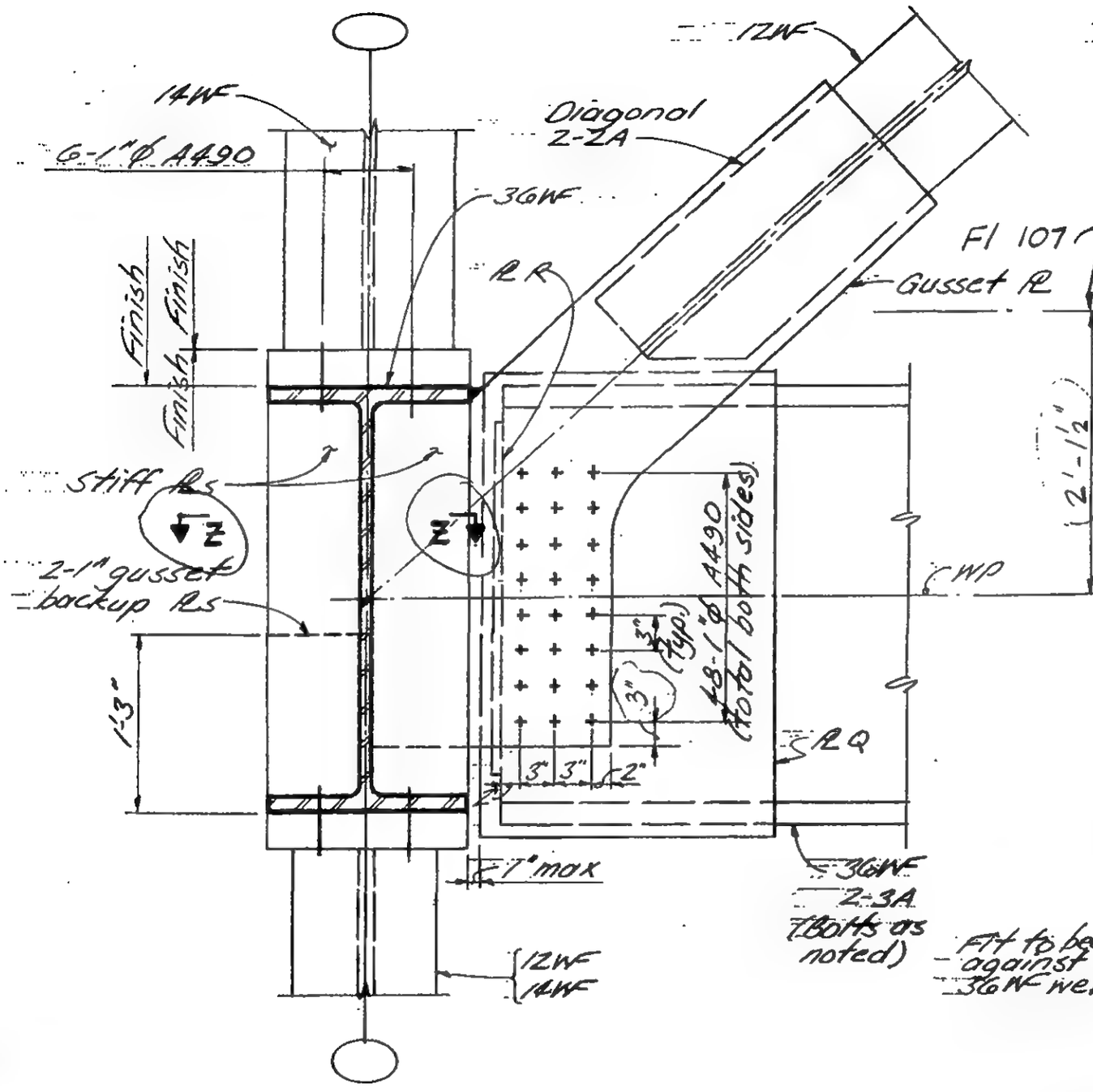

Section U-U
Section V-V (opp. hand)

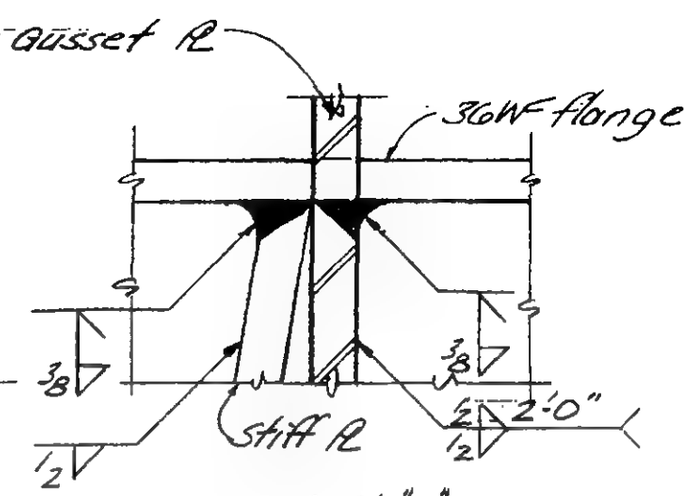

Detail "A"

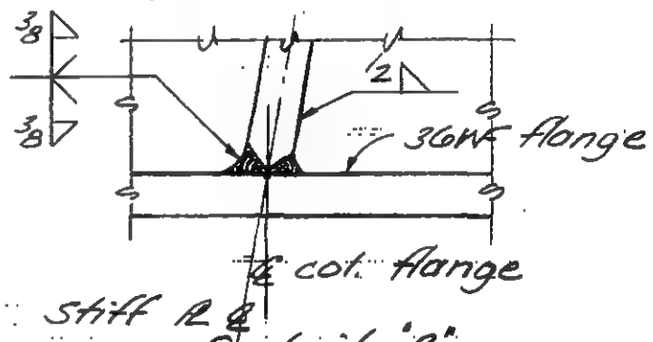

Detail "B"

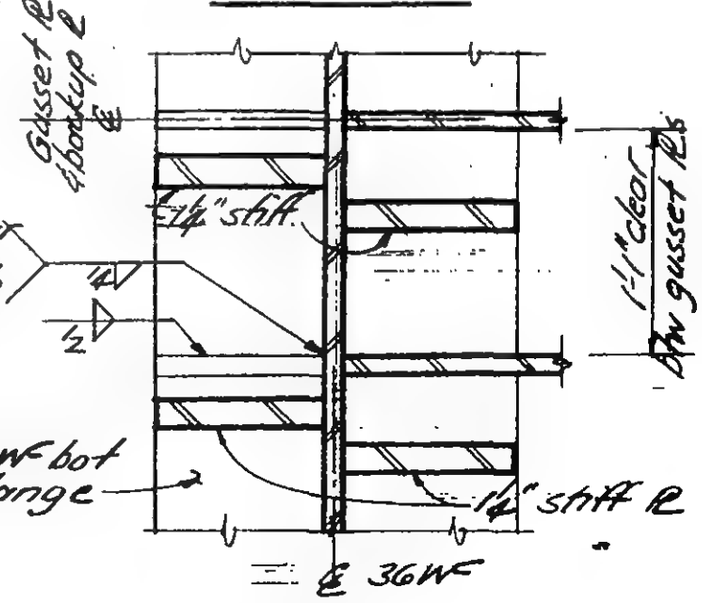

Section Z-Z

LICENSED PROFESSIONAL ENGINEER — LESLIE E. ROBERTSON — No. 34360 — UNIVERSITY OF THE STATE OF NEW YORK

DESIGNED: L. Quirko
DRAWN: J. Adams
REVIEWED: E. Dranos

9-AB13-10.5

SKILLING, HELLE, CHRISTIANSEN, ROBERTSON — Structural & Civil Engineers

PROJECT THE WORLD TRADE CENTER | TITLE FL 107 - PH CONNECTION DETAILS - EXTERIOR WALL | DATE 4 - 1 - 70

REVISIONS

5/27/70

GENERAL NOTES - CHAPTER 14

The following provisions apply to details this chapter unless specifically shown otherwise in this chapter.

1. All steel plates, sections, and detail material shall be Fy = 50 ksi
2. All bolts shall be ASTM A490, friction type, 1"Ø unless otherwise shown.
3. Spacing of bolts shall be 3" in each direction.
4. Edge distance between the last line of bolts and edge of plate shall be 2".
5. Shim stock shall be 1/8" minimum to 3/8" maximum.
6. Bolts at beam seats floor 107 to be A307 or A325 hand tightened. If A325 are torqued, loosen after top PL is welded and before concrete is cast.
7. Damping units to be installed after slab has been cast.

LICENSED PROFESSIONAL ENGINEER — LESLIE E. ROBERTSON — No. 34360 — UNIVERSITY OF THE STATE OF NEW YORK

DESIGNED

DRAWN W. Clarke

REVIEWED C.O. Brewer

9-AB14-1

SKILLING, HELLE, CHRISTIANSEN, ROBERTSON — Structural & Civil Engineers

PROJECT: THE WORLD TRADE CENTER | TITLE: FL. 107-P.H. CONNECTION DETAILS-EXT WALL-FL 107 | DATE: 4-1-70

REVISIONS

5/27/70
6/17/70
7/8/70

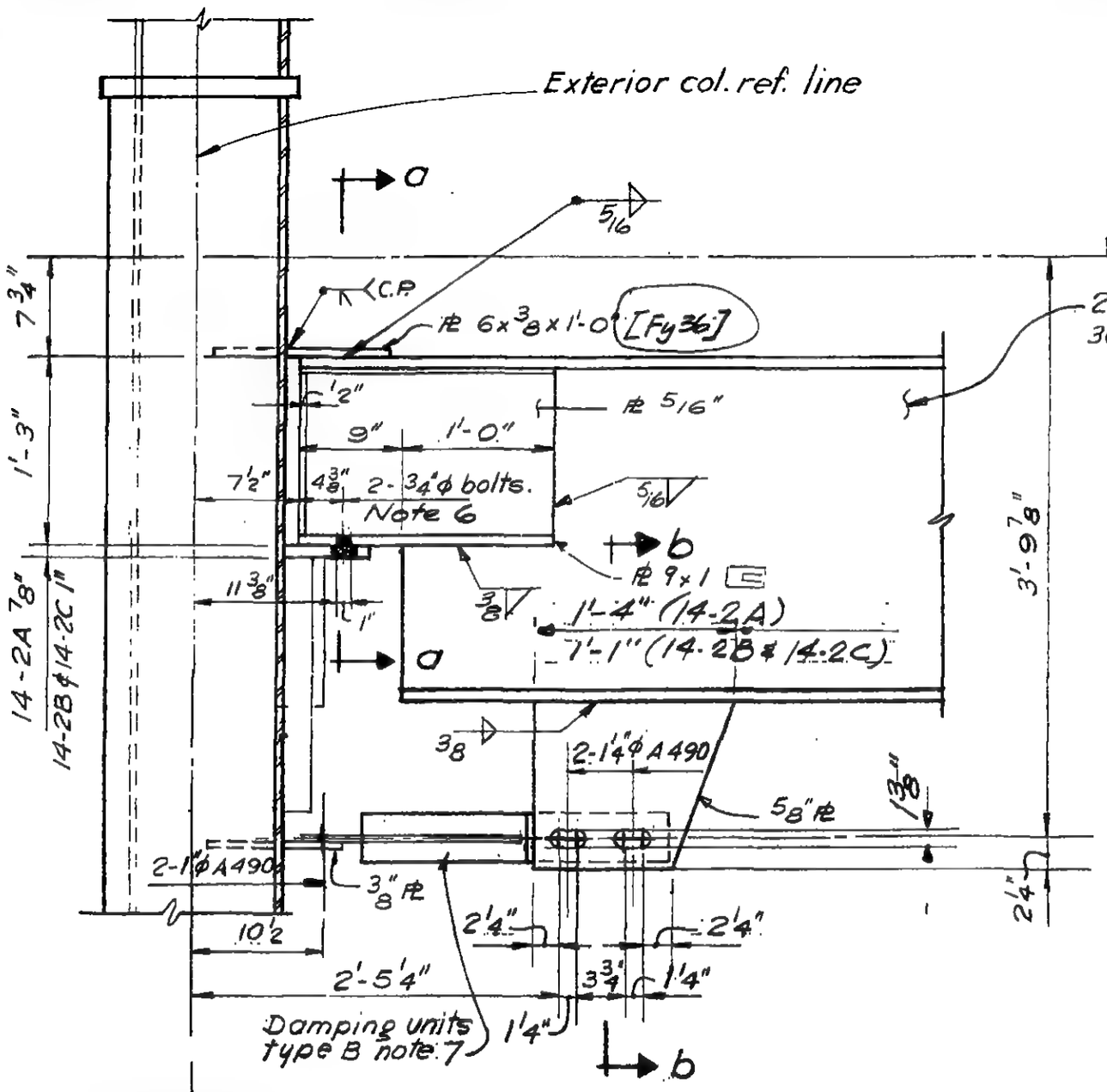

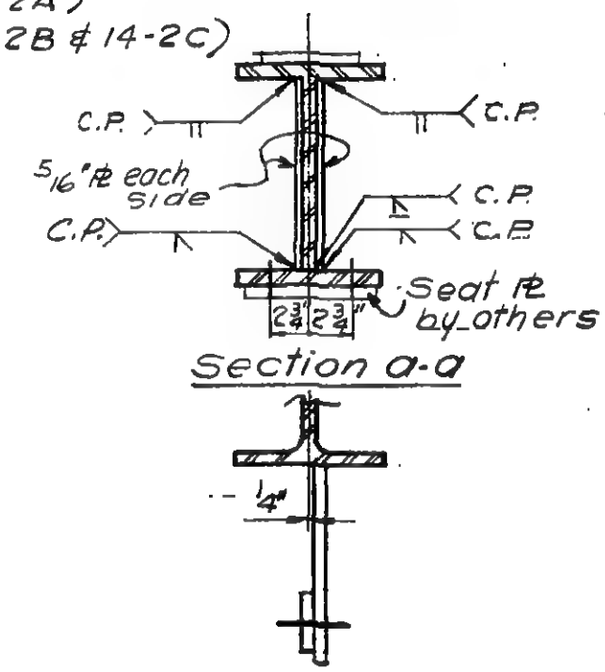

Section a-a

Section b-b

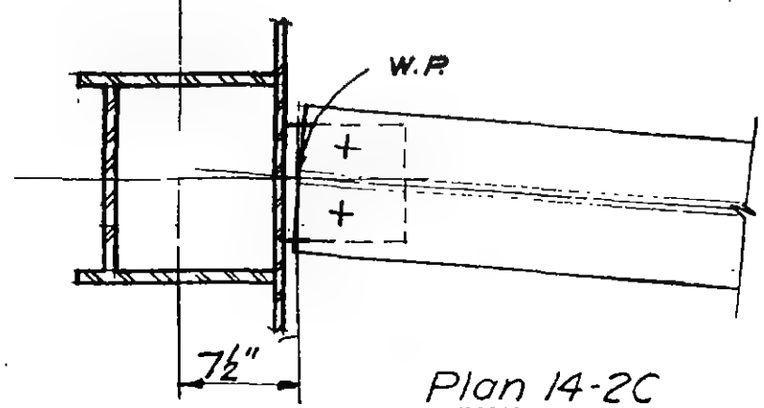

Plan 14-2C

Detail 14-2A, 2B, 2C

Note: Slope shown N.T.S.

LICENSED PROFESSIONAL ENGINEER — LESLIE E. ROBERTSON — No. 34860 — UNIVERSITY OF THE STATE OF NEW YORK

DESIGNED

DRAWN V.H.A

REVIEWED W Brewer

9-AB14-2

SKILLING, HELLE, CHRISTIANSEN, ROBERTSON — Structural & Civil Engineers

PROJECT THE WORLD TRADE CENTER | TITLE FL.107 - PH CONNECTION DETAILS - EXT WALL - FL 107 | DATE 4 - 1 - 70

REVISIONS

5/27/70.
6/17/70
7/8/70

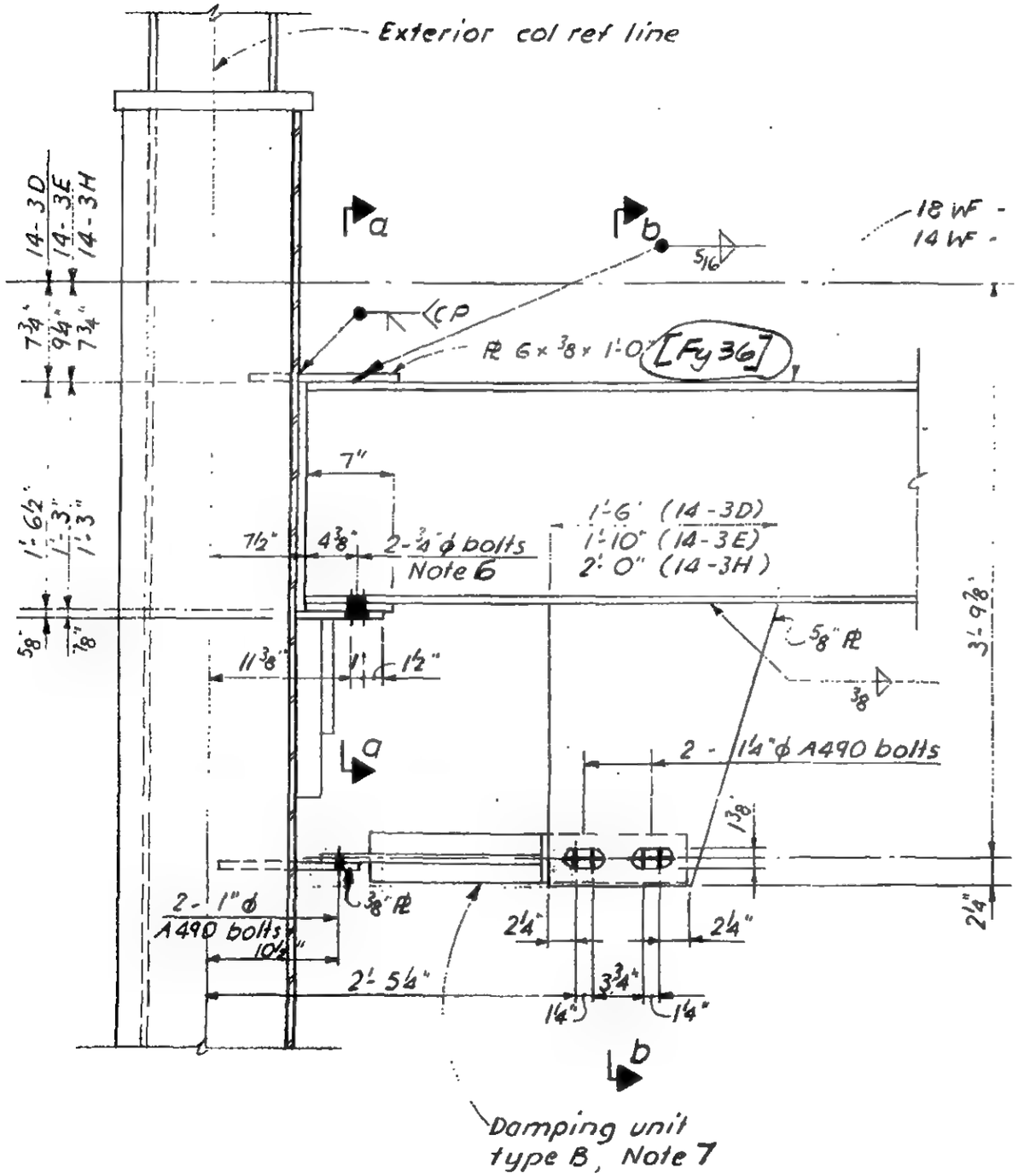

Section a-a

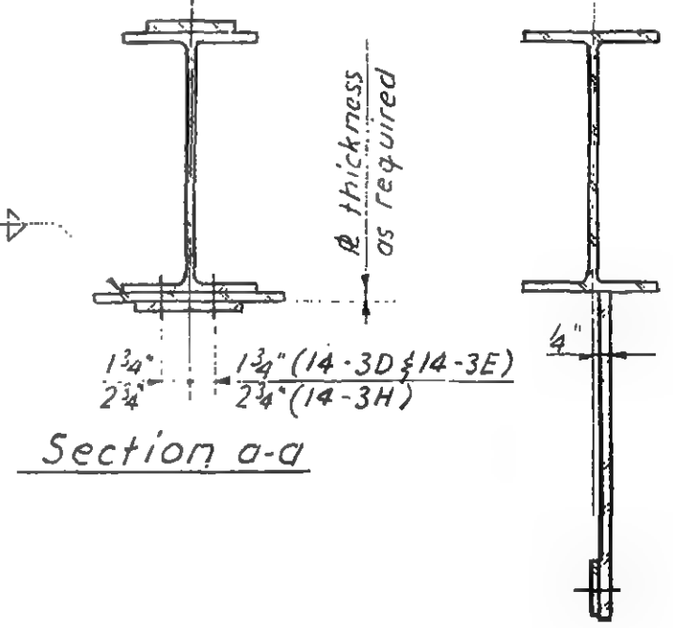

Section b-b

Detail 14-3D, 3E

LICENSED PROFESSIONAL ENGINEER
LESLIE E. ROBERTSON
No. 34360
UNIVERSITY OF THE STATE OF NEW YORK

DESIGNED

DRAWN F. Smith

REVIEWED W. Brewer

9-AB14-3

SKILLING, HELLE, CHRISTIANSEN, ROBERTSON — Structural & Civil Engineers

PROJECT: THE WORLD TRADE CENTER | TITLE: FL.107 - PH CONNECTION DETAILS - EXT.WALL - FL 107 | DATE: 4-1-70

REVISIONS

5/27/70
7/8/70

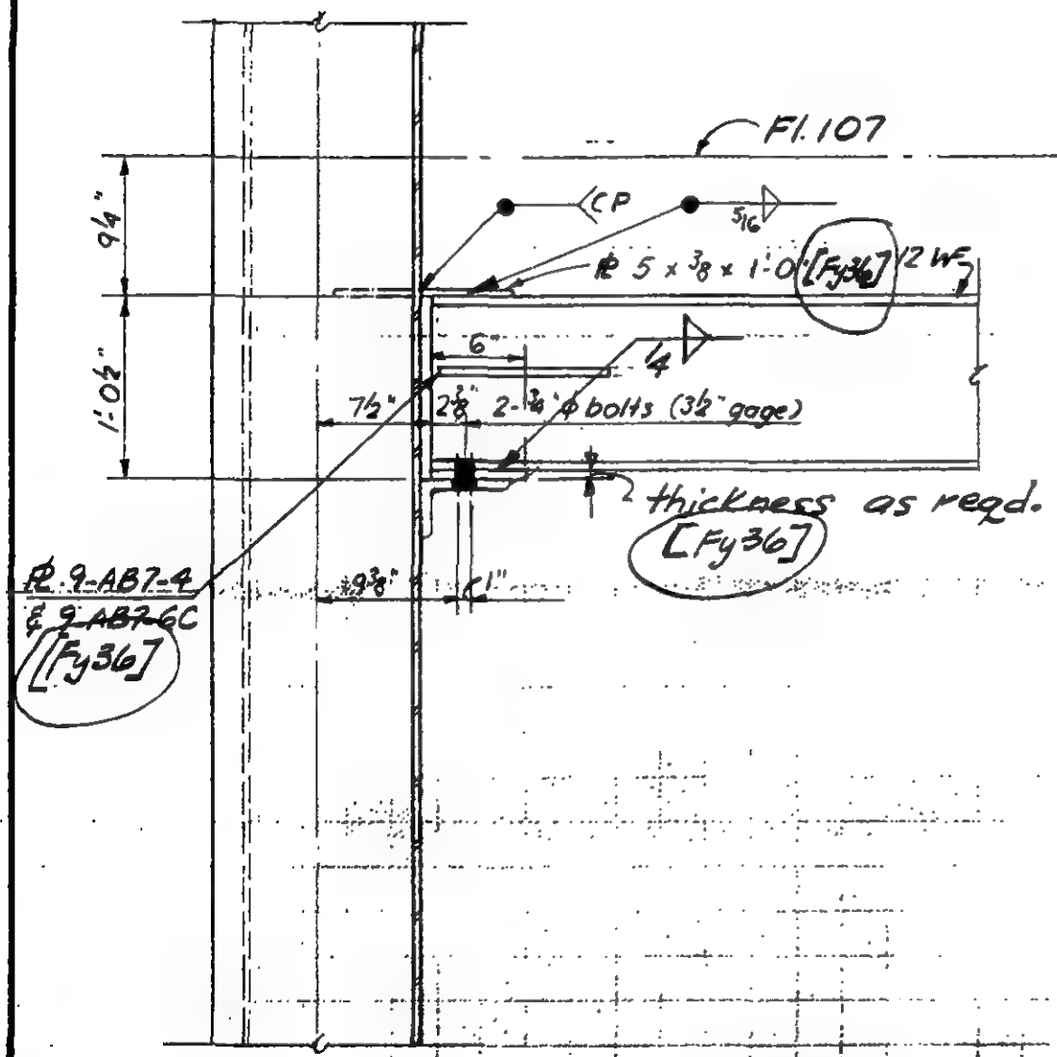

Detail 14-4F

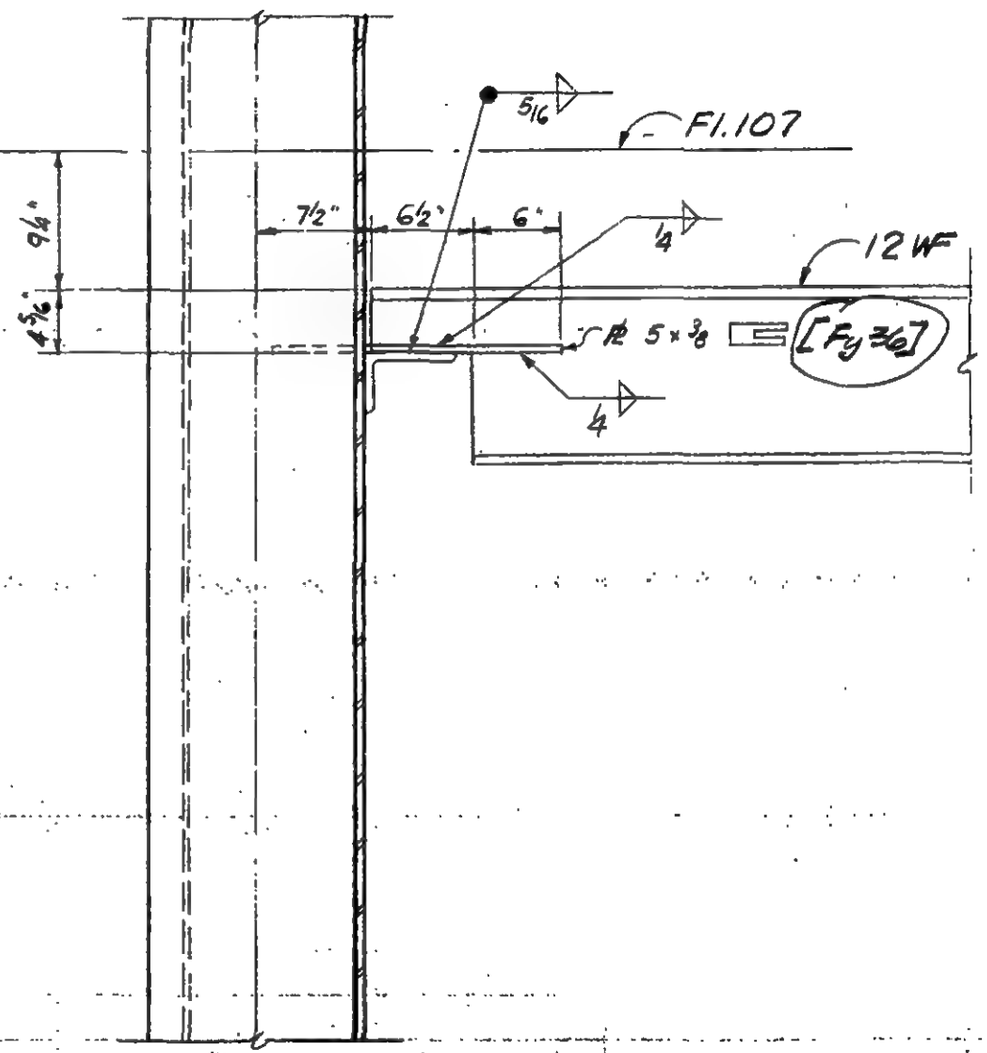

Detail 14-4G

LICENSED PROFESSIONAL ENGINEER
LESLIE E. ROBERTSON
No. 54360
UNIVERSITY OF THE STATE OF NEW YORK

DESIGNED

DRAWN
E. Smith

REVIEWED
W. Brewer

9-AB14-4

SKILLING, HELLE, CHRISTIANSEN, ROBERTSON — Structural & Civil Engineers

PROJECT THE WORLD TRADE CENTER | TITLE FL. 107-PH CONNECTION DETAILS - EXT. WALL-FL 107 | DATE 4-1-70

REVISIONS

5/27/70

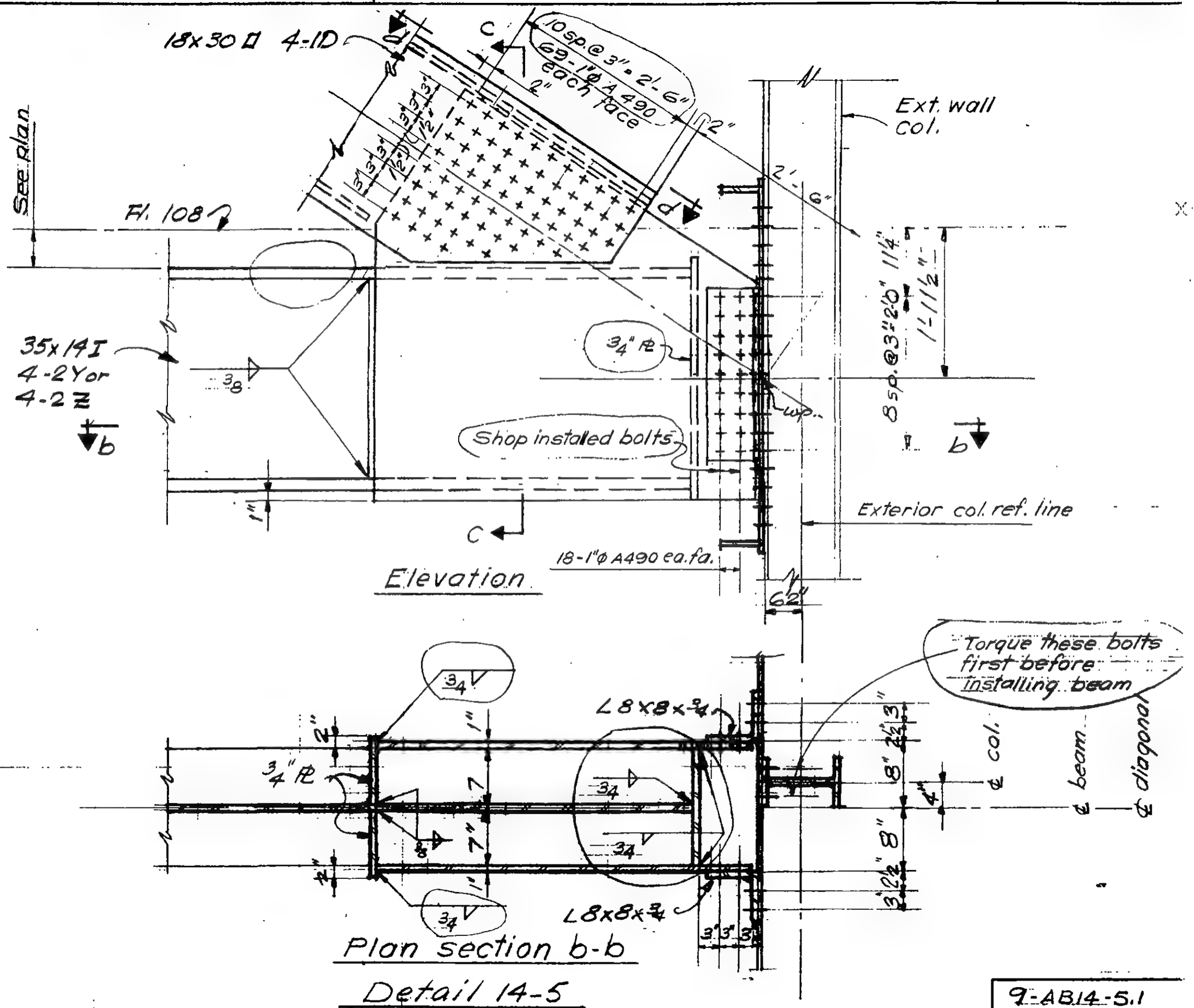

LICENSED PROFESSIONAL ENGINEER — LESLIE E. ROBERTSON — No. 34360 — UNIVERSITY OF THE STATE OF NEW YORK

DESIGNED

DRAWN V.H.A

REVIEWED W. Brewer

9-AB14-5.1

SKILLING, HELLE, CHRISTIANSEN, ROBERTSON — Structural & Civil Engineers

PROJECT THE WORLD TRADE CENTER | TITLE FL.107-RH CONNECTION DETAILS-EXT WALL -FL 107 | DATE 4-1-70

REVISIONS

5/27/70

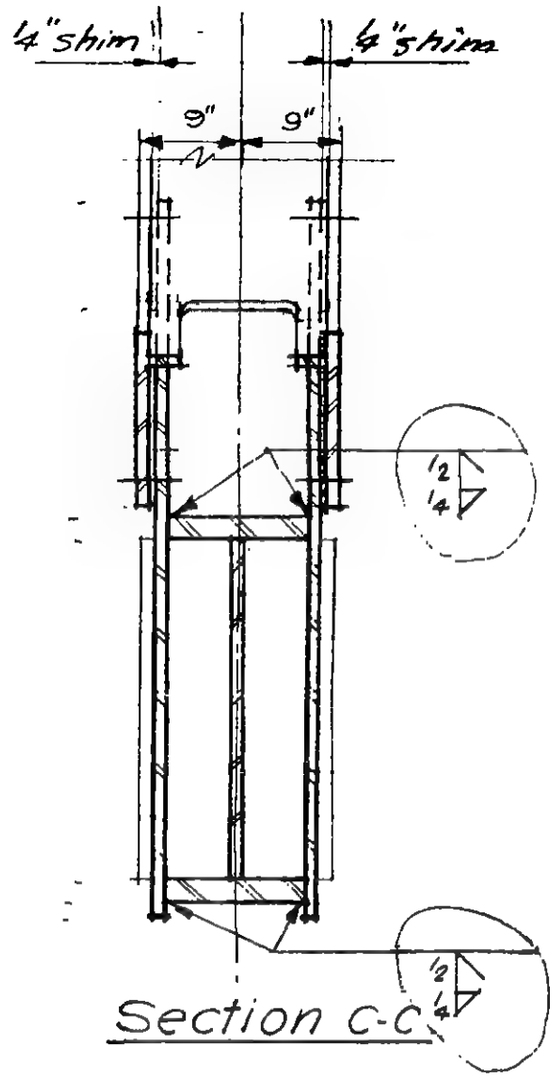

Section c-c

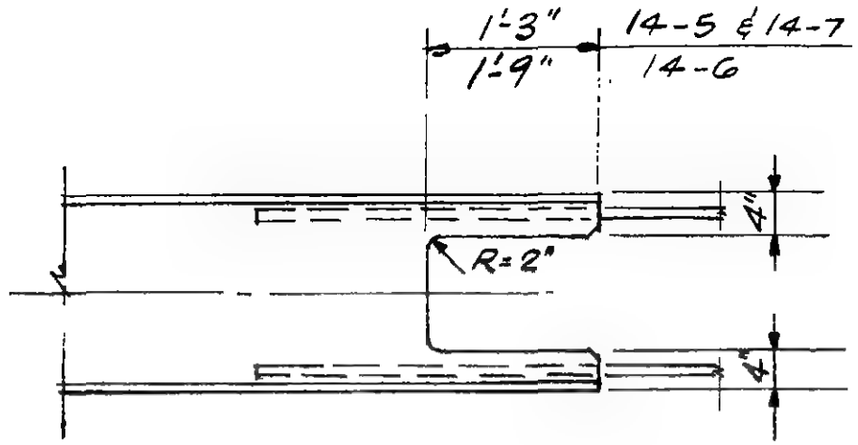

Section d-d

LICENSED PROFESSIONAL ENGINEER
LESLIE E. ROBERTSON
No 34960
UNIVERSITY OF THE STATE OF NEW YORK

DESIGNED

DRAWN V.H.A

REVIEWED H W Brewer

9-AB14-5.2

SKILLING, HELLE, CHRISTIANSEN, ROBERTSON — Structural & Civil Engineers

PROJECT THE WORLD TRADE CENTER | TITLE FL.107-PH CONNECTION DETAILS - EXT WALL - FL 107 | DATE 4-1-70

REVISIONS

5/27/70

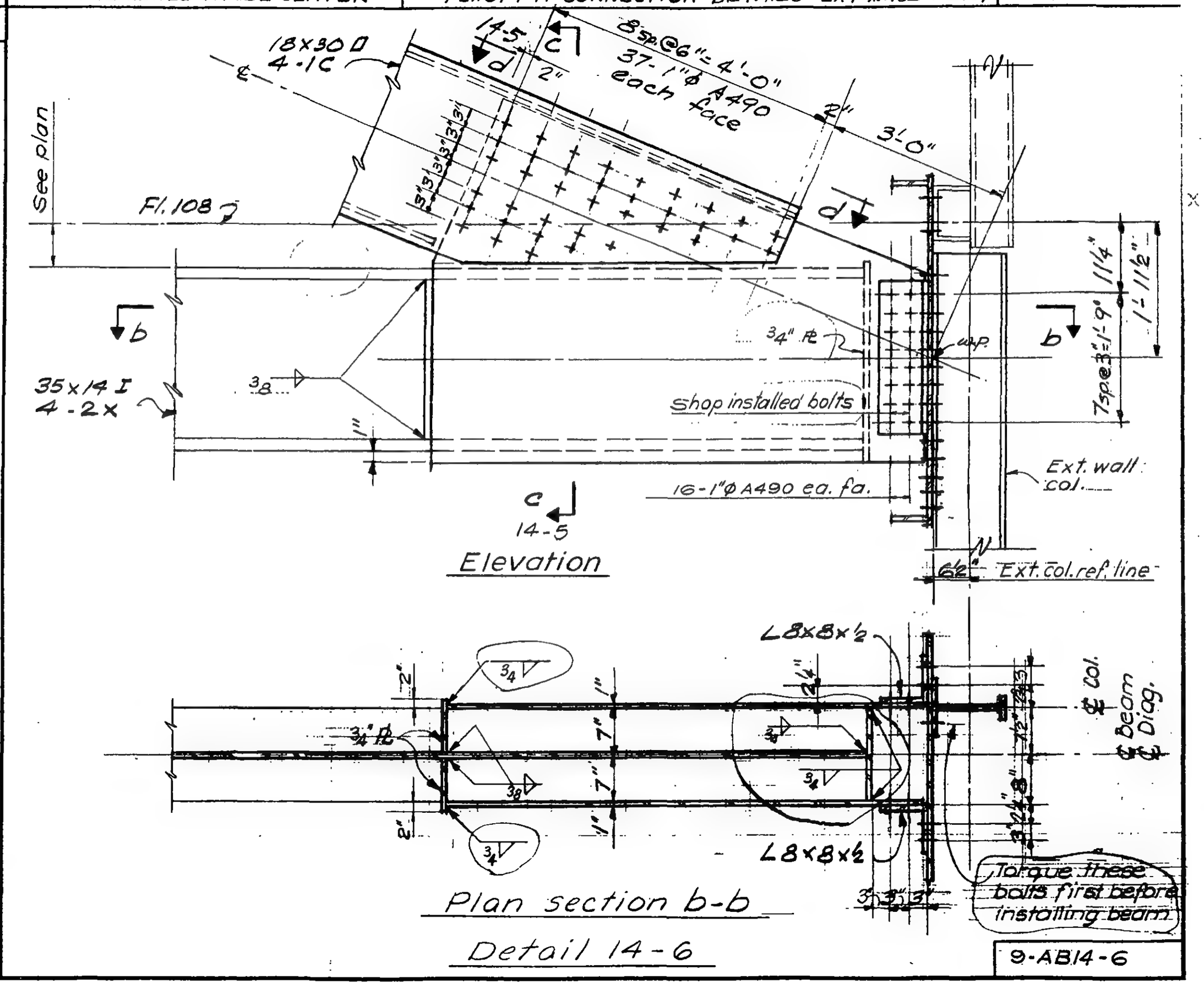

LICENSED PROFESSIONAL ENGINEER
LESLIE E. ROBERTSON
No. 34560
UNIVERSITY OF THE STATE OF NEW YORK

DESIGNED

DRAWN V.H.A

REVIEWED H.W. Brewer

9-AB14-6

SKILLING, HELLE, CHRISTIANSEN, ROBERTSON — Structural & Civil Engineers

PROJECT THE WORLD TRADE CENTER | TITLE FL.107-PH CONNECTION DETAILS - EXT. WALL - FL 107 | DATE 4-1-70

REVISIONS

5/27/70

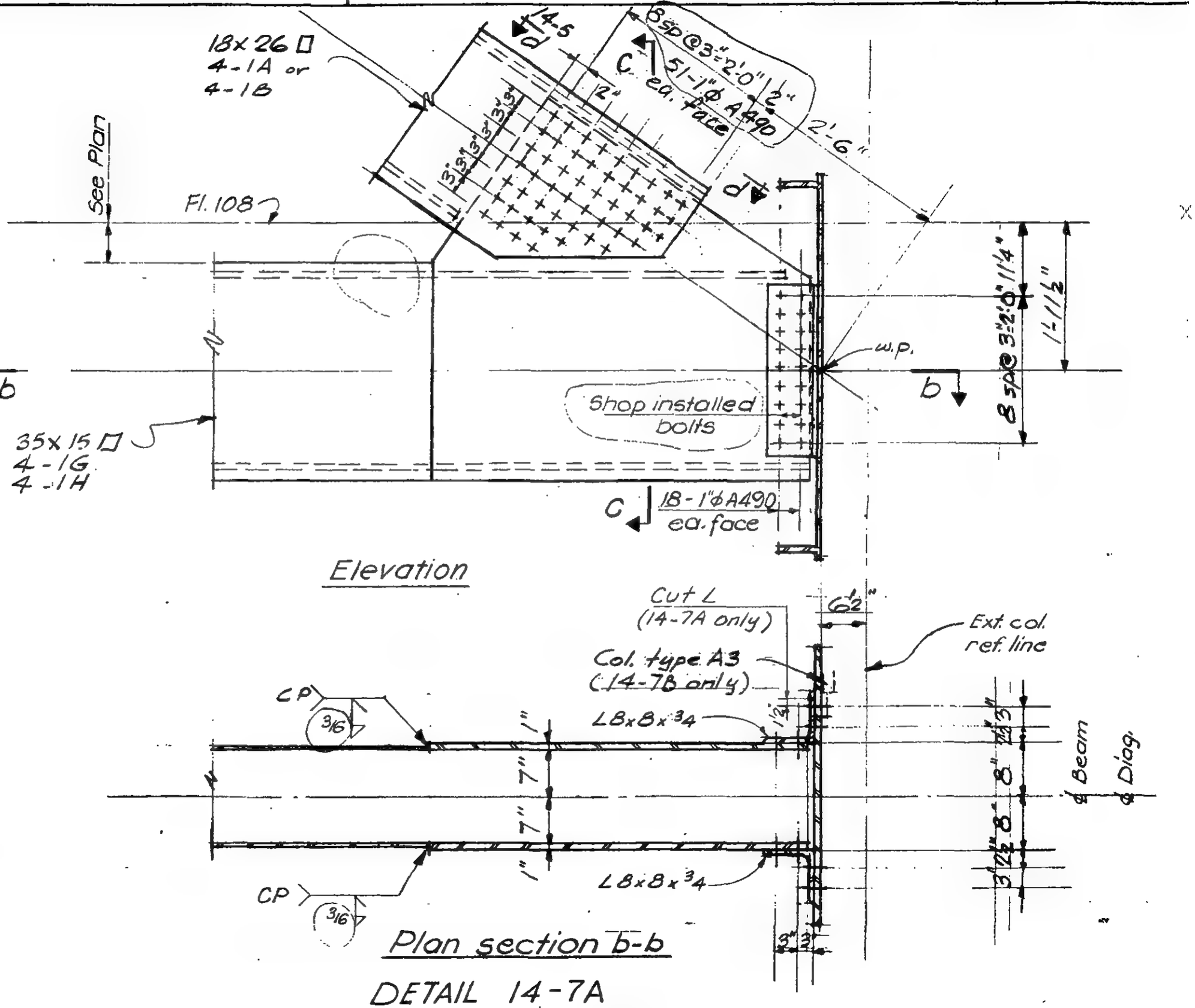

Elevation

Plan section b-b

DETAIL 14-7A

DETAIL 14-7B as noted

LICENSED PROFESSIONAL ENGINEER
LESLIE E. ROBERTSON
No. 34860
UNIVERSITY OF THE STATE OF NEW YORK

DESIGNED

DRAWN V.H.A

REVIEWED W. Brewer

9-AB14-7.1

SKILLING, HELLE, CHRISTIANSEN, ROBERTSON — Structural & Civil Engineers

PROJECT THE WORLD TRADE CENTER | TITLE FL. 107-PH CONNECTION DETAILS - EXT. WALL - FL 107 | DATE 4-1-70

REVISIONS

5/27/70

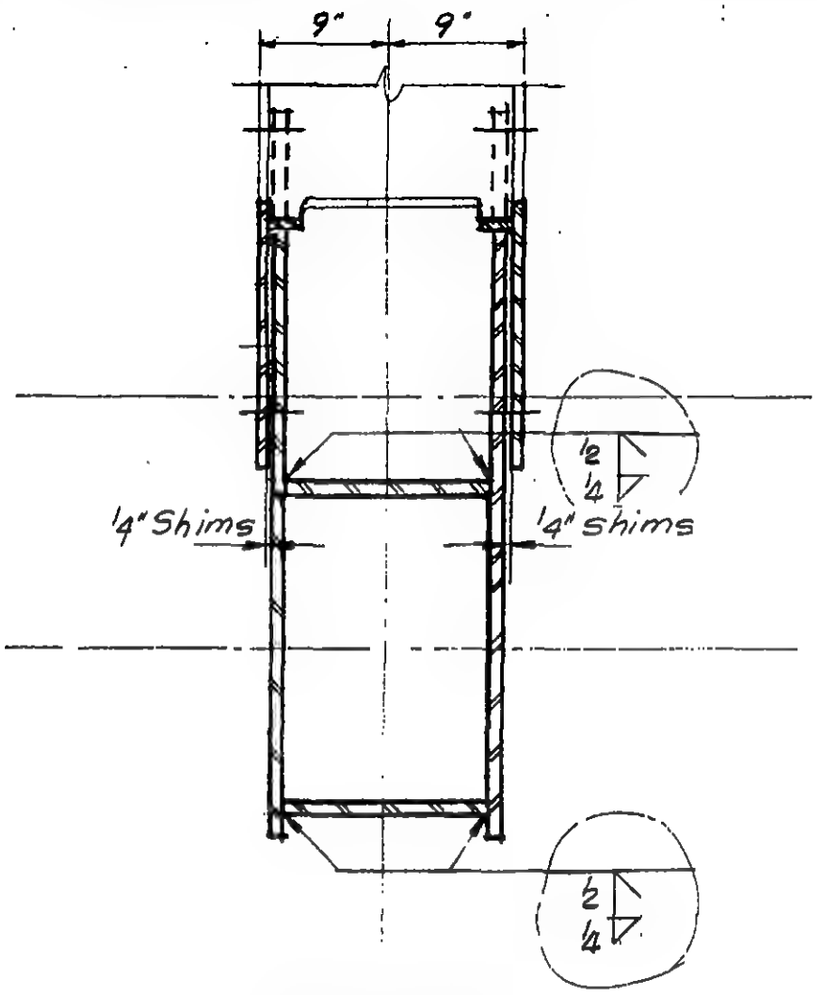

Section c-c

DESIGNED

DRAWN V.H.A

REVIEWED W. Brewer

9-AB14-7.2

SKILLING, HELLE, CHRISTIANSEN, ROBERTSON — Structural & Civil Engineers

PROJECT THE WORLD TRADE CENTER

TITLE FL 107-PH CONNECTION DETAILS - EXTERIOR WALL - FL 108

DATE 4-1-70

REVISIONS

5-27-70

8-3-70

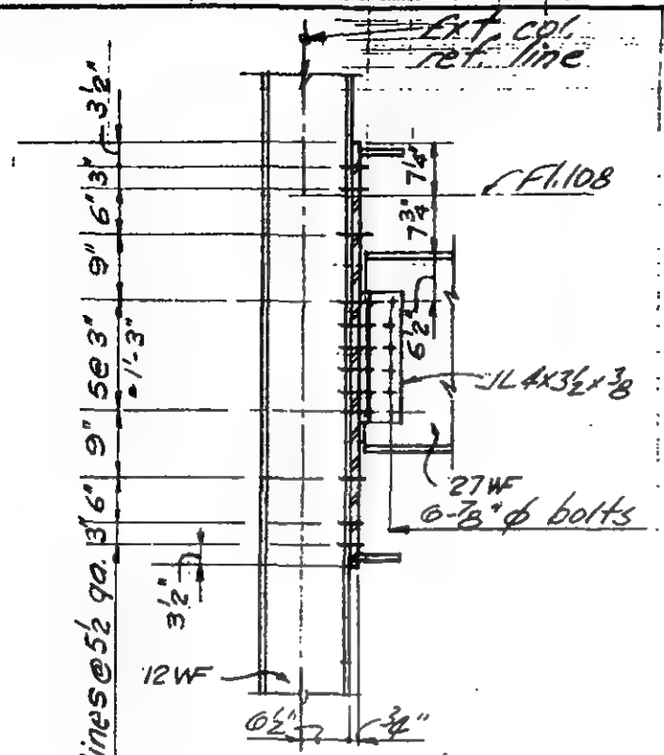

All bolts ⅞" ϕ

Detail 14-8.11

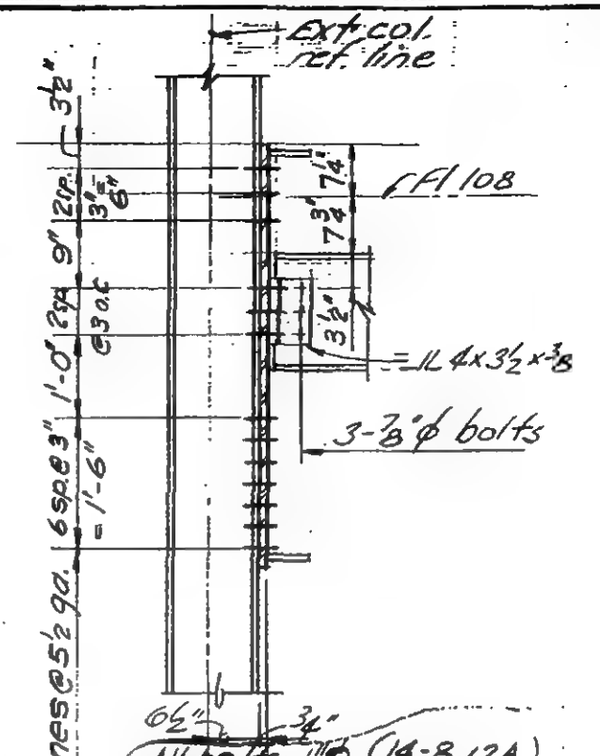

All bolts 1" ϕ (14-8.12A)

All bolts ⅞" ϕ (14-8.12)

Detail 14-8.12 & 14-8.12A

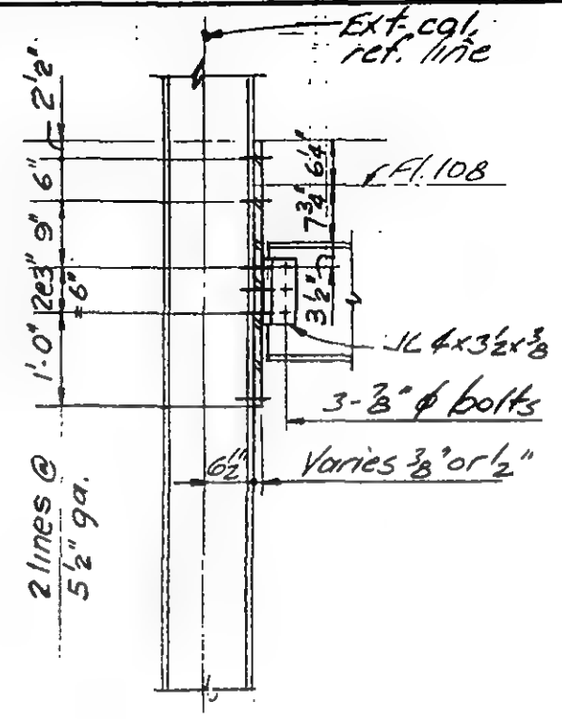

All bolts ⅞" ϕ

Detail 14-8.13

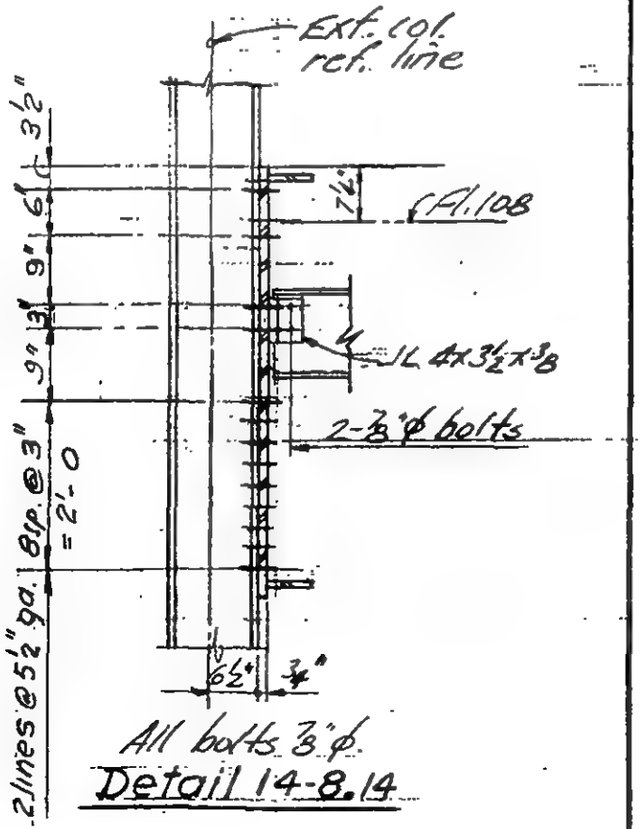

All bolts ⅞" ϕ.

Detail 14-8.14

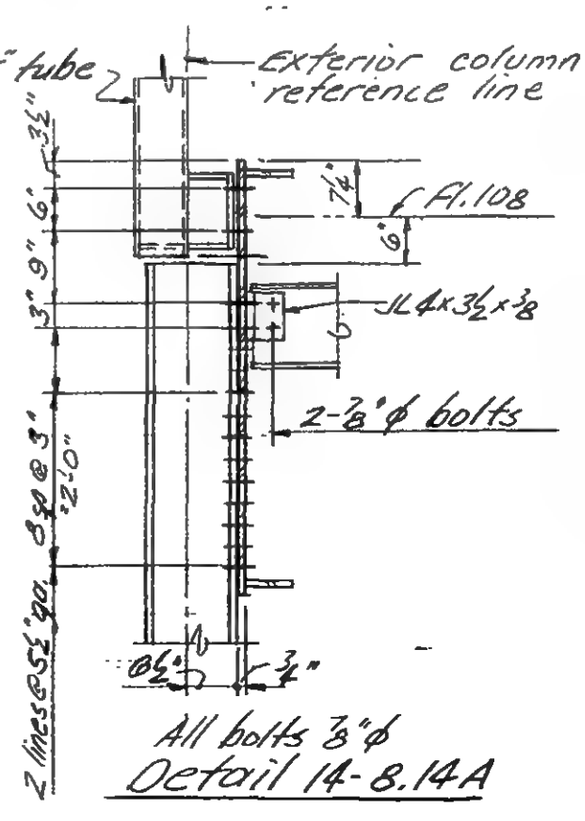

All bolts ⅞" ϕ

Detail 14-8.14A

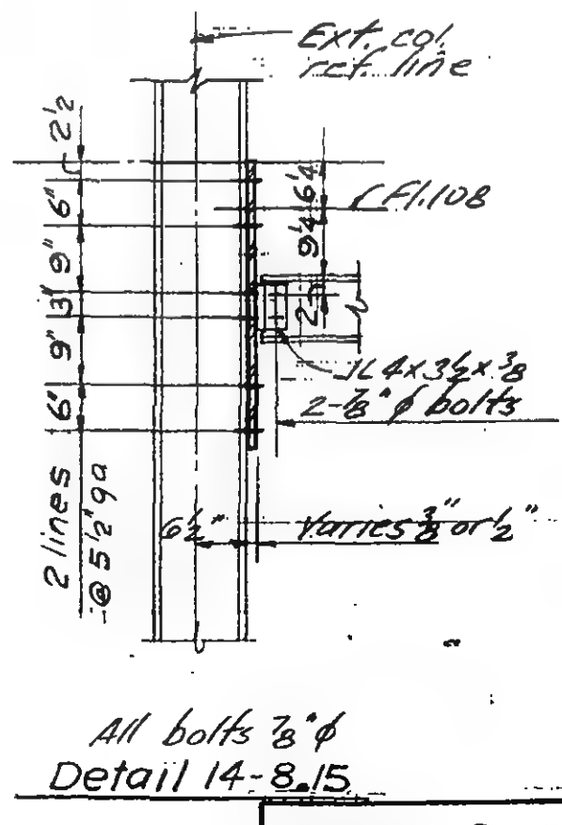

All bolts ⅞" ϕ

Detail 14-8.15

LICENSED PROFESSIONAL ENGINEER — LESLIE E. ROBERTSON — No. 34960 — UNIVERSITY OF THE STATE OF NEW YORK

DESIGNED

DRAWN V.H.A

REVIEWED W. Brewer

9-AB14-8.1

SKILLING, HELLE, CHRISTIANSEN, ROBERTSON — Structural & Civil Engineers

PROJECT: THE WORLD TRADE CENTER

TITLE: FL 107-PH CONNECTION DETAILS - EXTERIOR WALL - FL 108

DATE: 4-1-70

REVISIONS

5-27-70

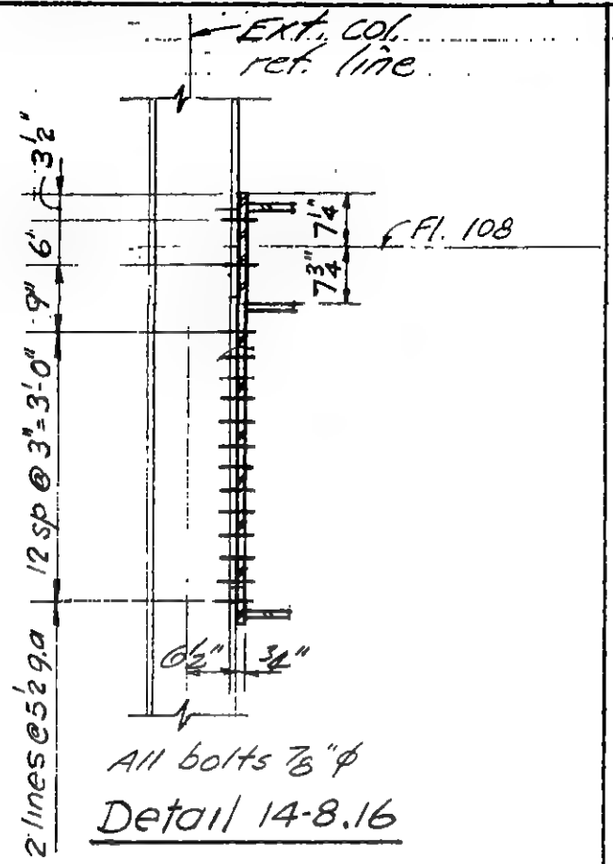

All bolts ⅞" ϕ

Detail 14-8.16

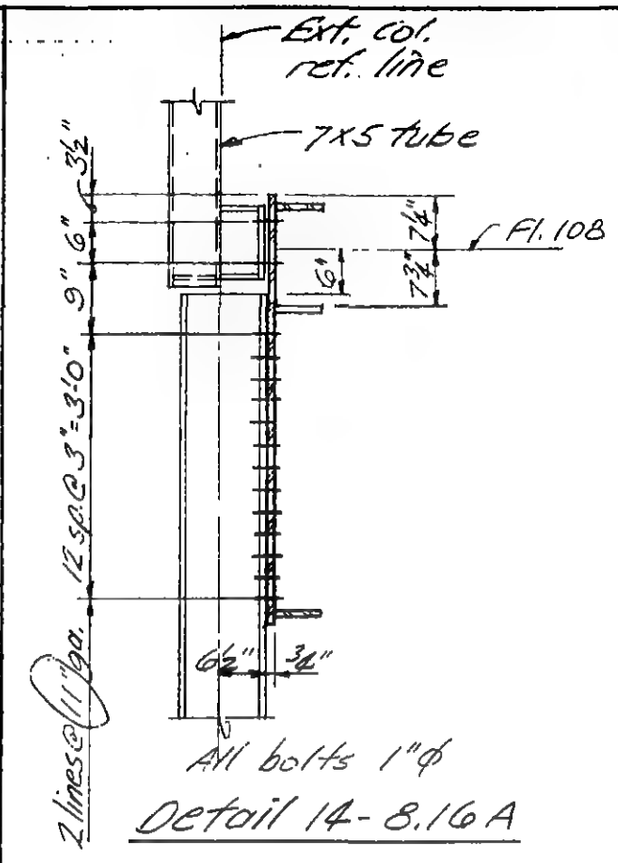

All bolts 1" ϕ

Detail 14-8.16A

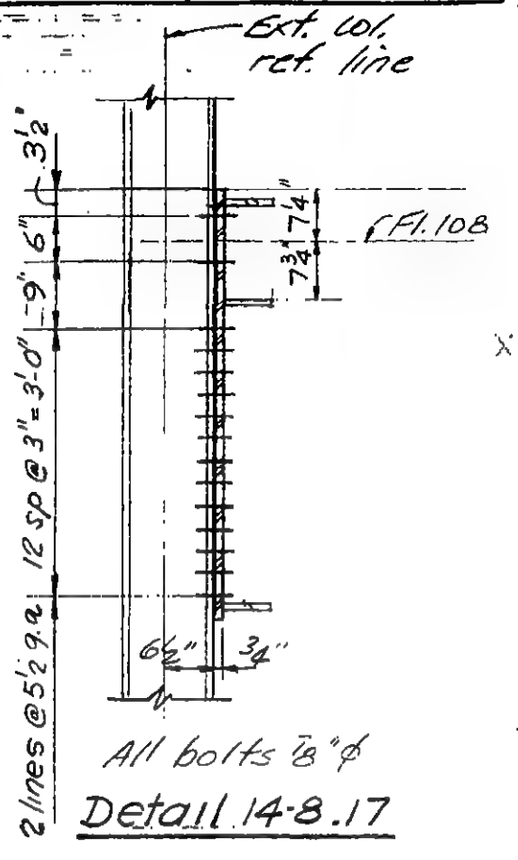

All bolts ⅞" ϕ

Detail 14-8.17

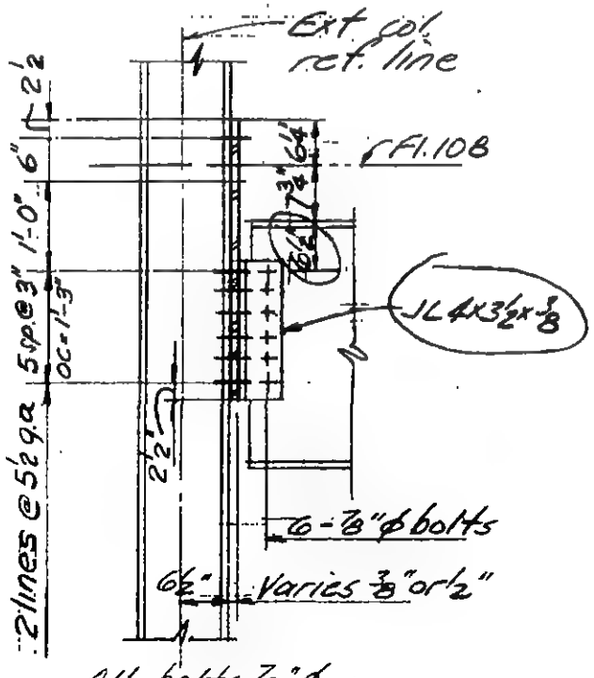

All bolts ⅞" ϕ

Detail 14-8.18

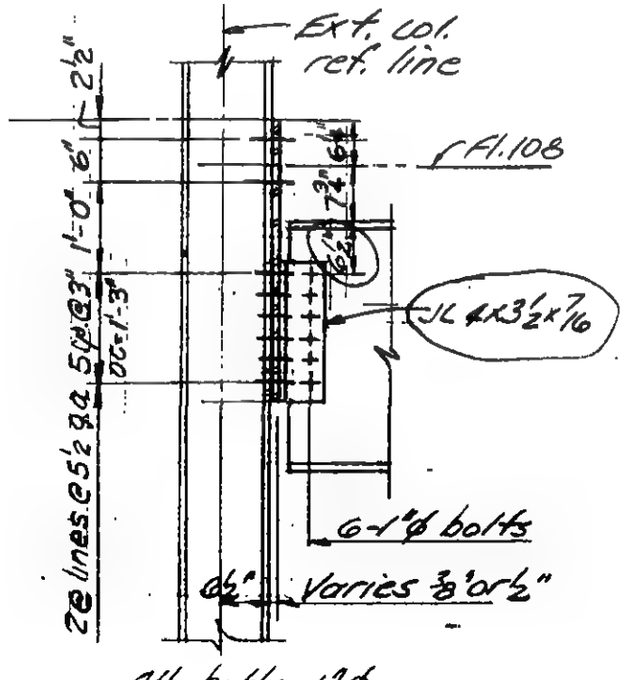

All bolts 1" ϕ

Detail 14-8.19

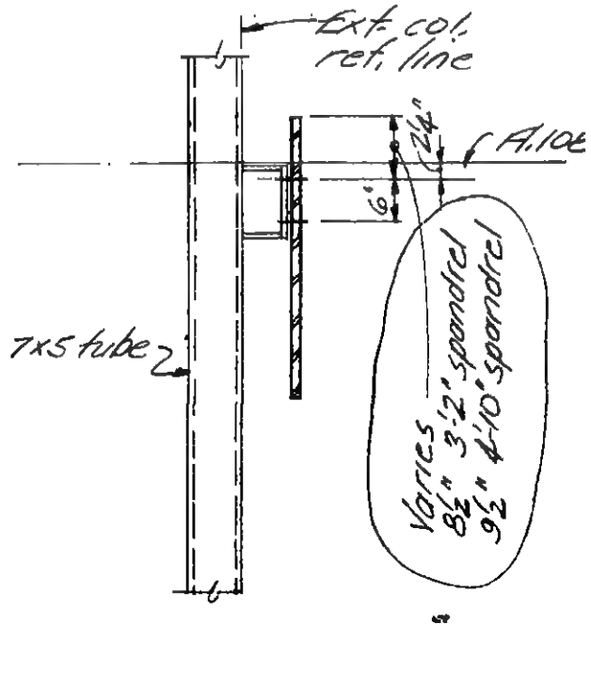

Detail 14-8.20

LICENSED PROFESSIONAL ENGINEER
LESLIE E. ROBERTSON
No. 34360
UNIVERSITY OF THE STATE OF NEW YORK

DESIGNED

DRAWN V.H.A

REVIEWED W Brewer

9-AB14-8.2

SKILLING, HELLE, CHRISTIANSEN, ROBERTSON — Structural & Civil Engineers

PROJECT: THE WORLD TRADE CENTER | TITLE: FL.107-PH CONNECTION DETAILS - EXT. WALL FLOOR | DATE: 8-3-70

REVISIONS: 9-8-70

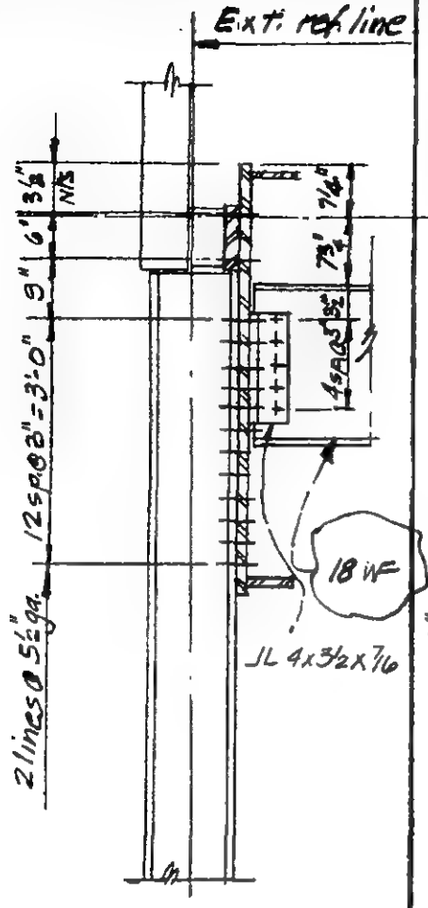

All bolts 1" ϕ

DETAIL 14-8.17A

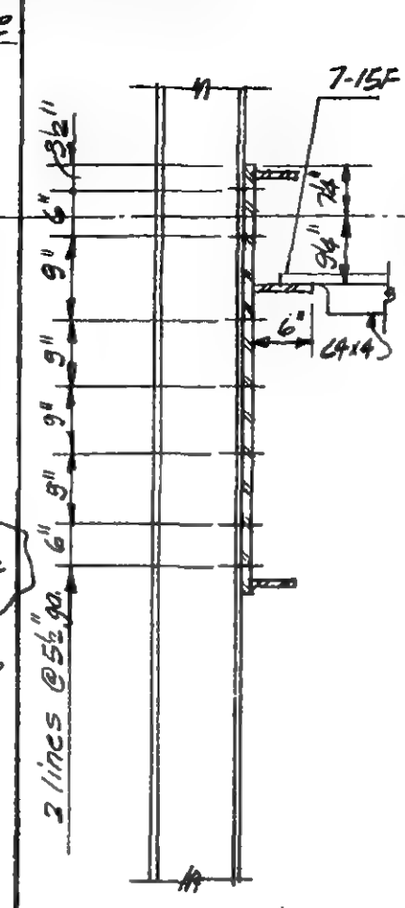

All bolts ⅞" ϕ

DETAIL 14-8.17B

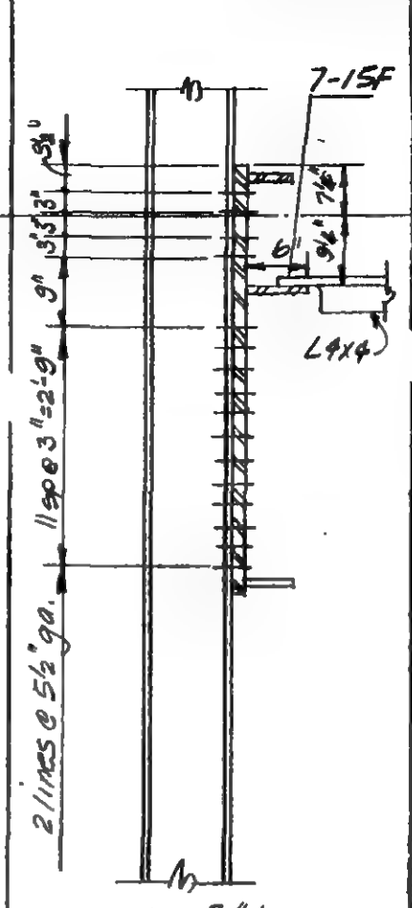

All bolts ⅞" ϕ

DETAIL 14-8.17C

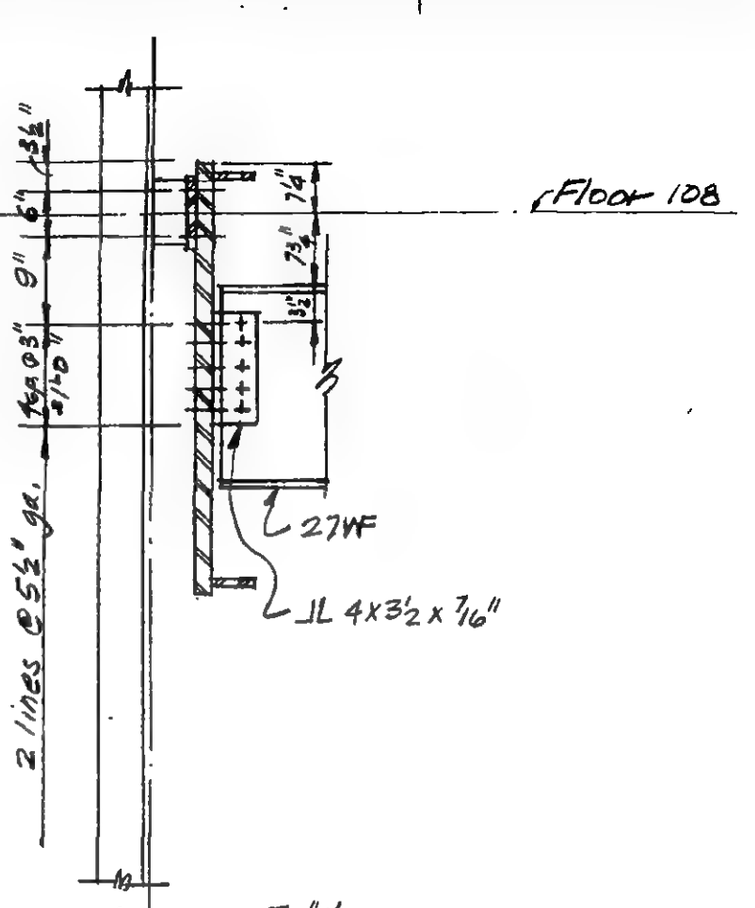

All bolts ⅞" ϕ

DETAIL 14-8.19A

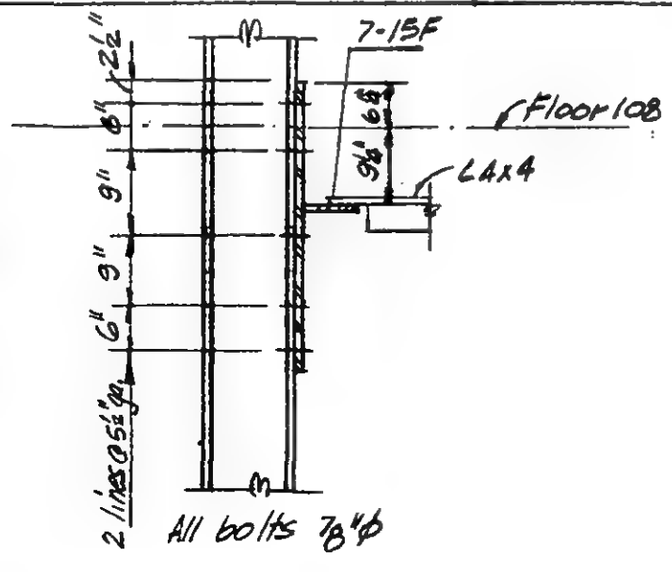

All bolts ⅞" ϕ

DETAIL 14-8.13A

LICENSED PROFESSIONAL ENGINEER — LESLIE E. ROBERTSON — No. 34360 — UNIVERSITY OF THE STATE OF NEW YORK

DESIGNED

DRAWN: P. Cecki

REVIEWED

9-B14-8.3

SKILLING, HELLE, CHRISTIANSEN, ROBERTSON — Structural & Civil Engineers

PROJECT: THE WORLD TRADE CENTER | TITLE: FL.107-PH. CONNECTION DETAILS EXTERIOR WALLS FL.110 | DATE: 4-1-70

REVISIONS
6/15/70
8/3/70

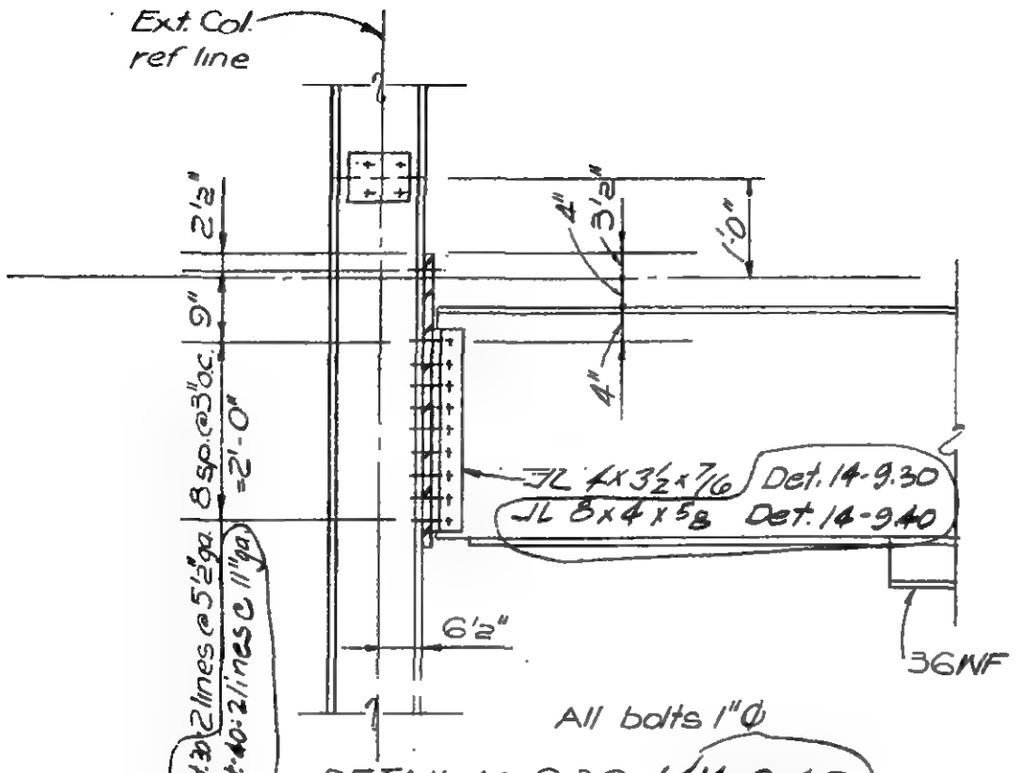

DETAIL 14-9.30 & 14-9.40

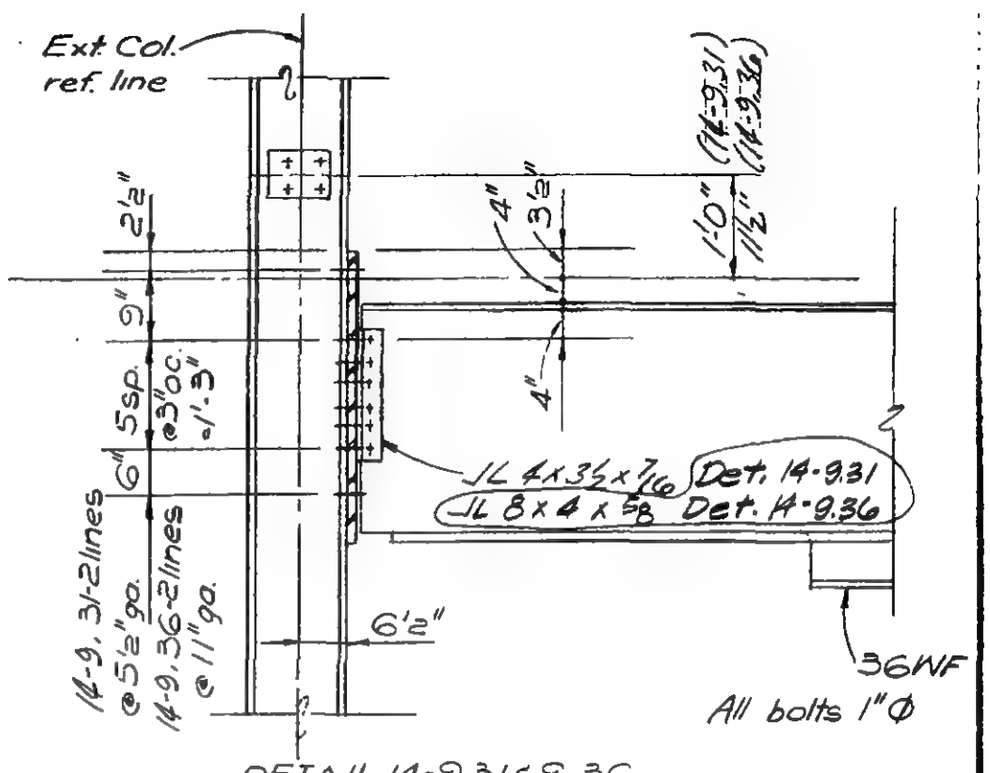

DETAIL 14-9.31 & 9.36

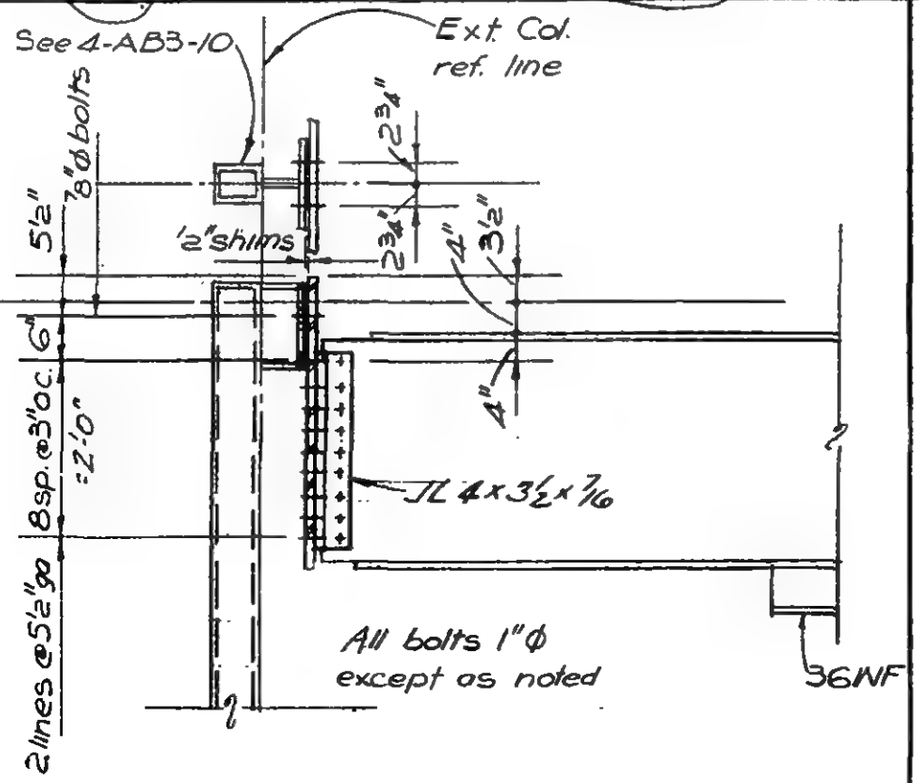

DETAIL 14-9.32

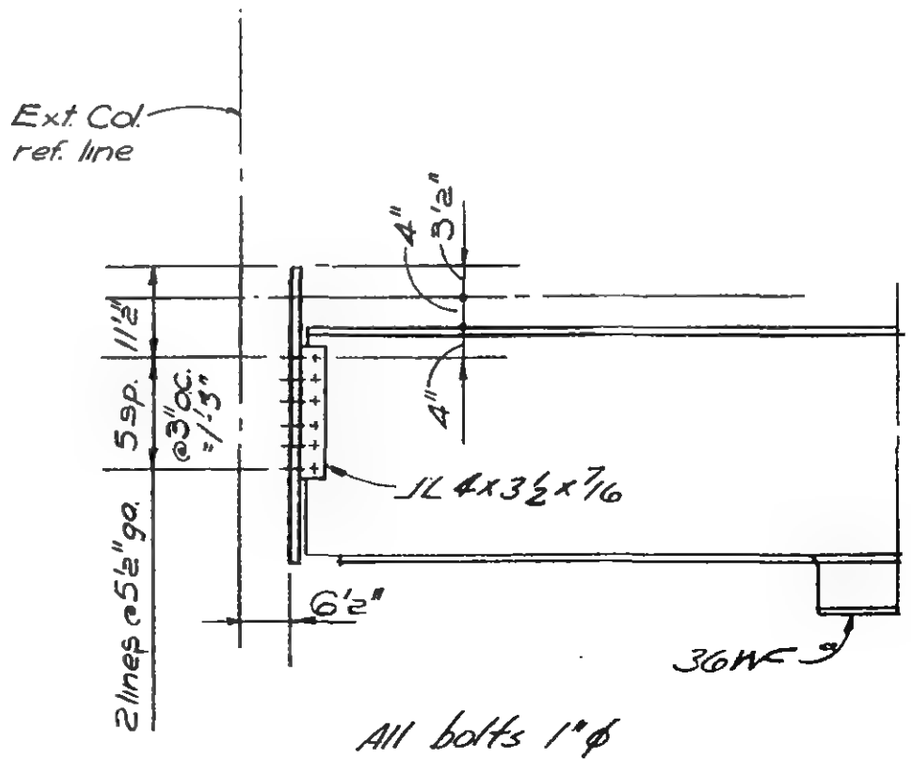

DETAIL 14-9.33

LICENSED PROFESSIONAL ENGINEER — LESLIE E. ROBERTSON — No. 34360 — UNIVERSITY OF THE STATE OF NEW YORK

DESIGNED

DRAWN: W. Clarke

REVIEWED

9-AB14-9.1

SKILLING HELLE CHRISTIANSEN ROBERTSON — Structural & Civil Engineers

PROJECT THE WORLD TRADE CENTER | TITLE FLOOR-PH. CONNECTION DETAILS EXTERIOR WALL FL. 110 | DATE 6-1-70

REVISIONS

6-15-70
8-3-70
12-14-70

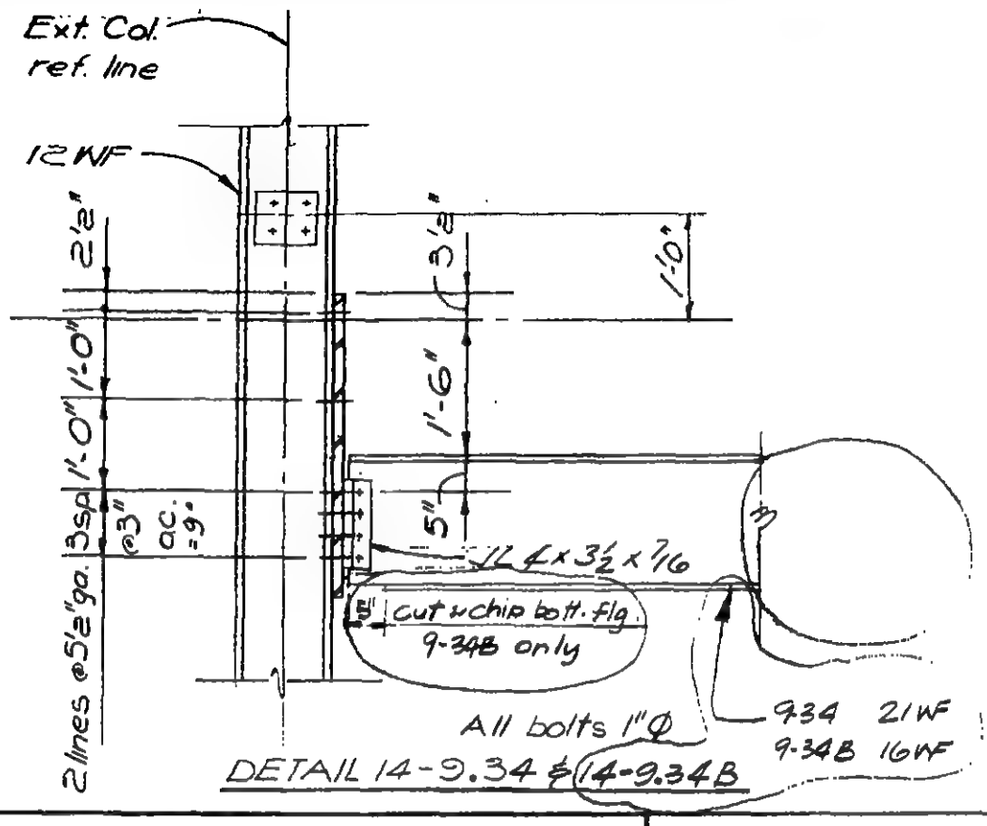

DETAIL 14-9.34 & 14-9.34B

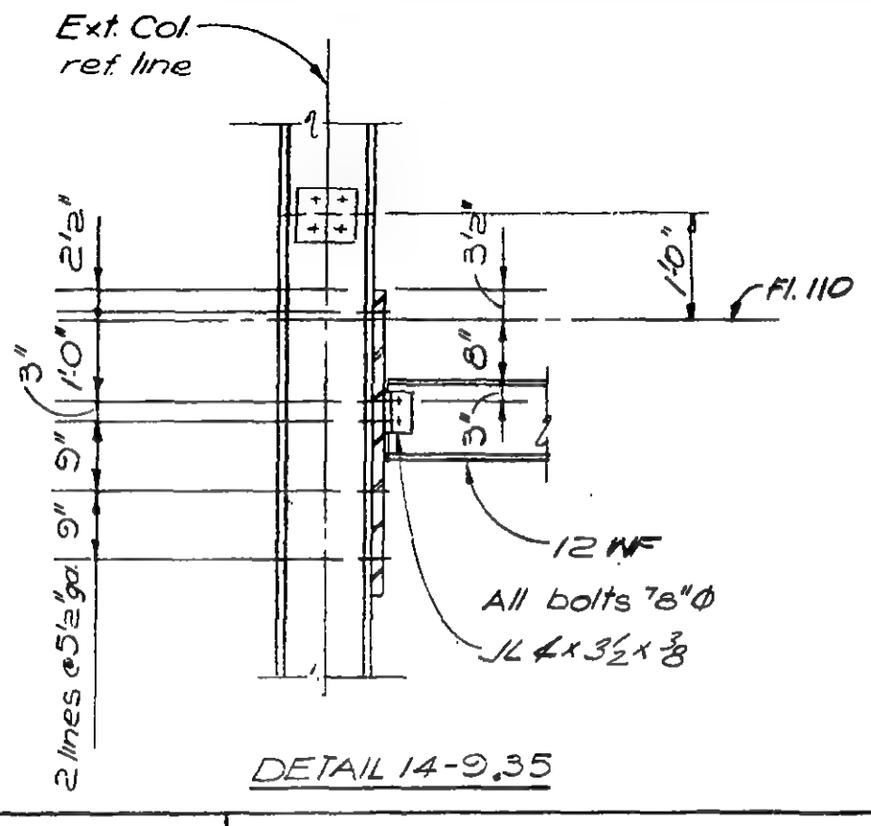

DETAIL 14-9.35

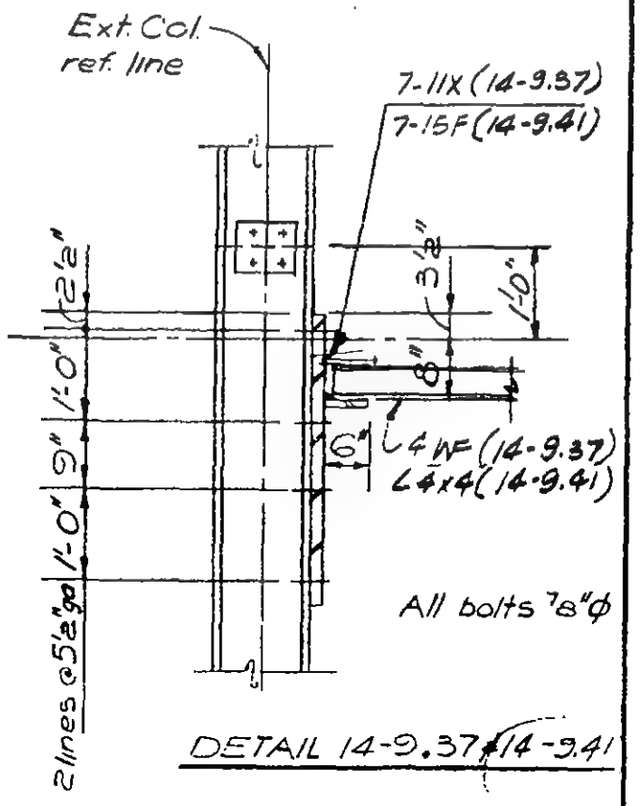

DETAIL 14-9.37 & 14-9.41

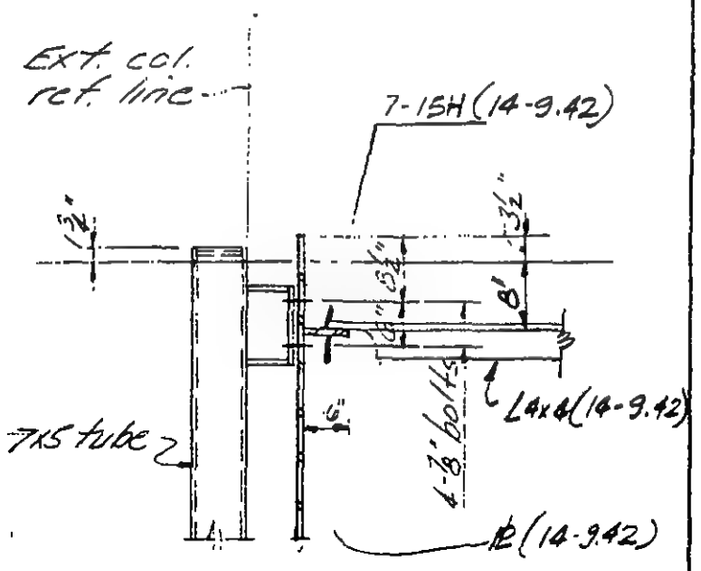

DETAIL 14-9.38 & 14-9.42

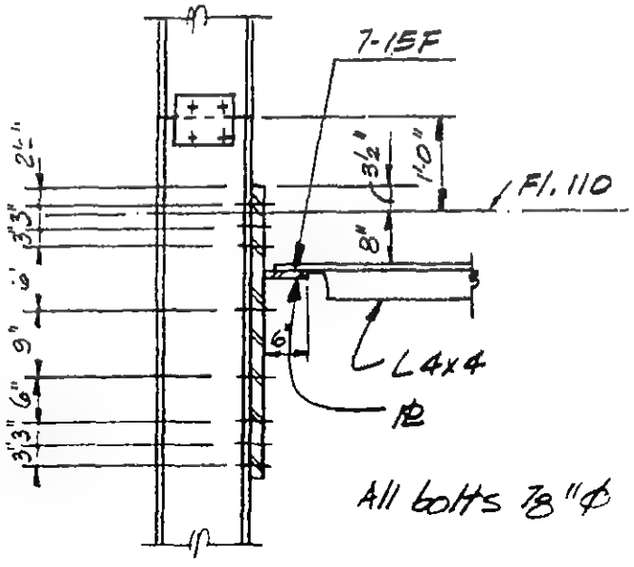

DETAIL 14-9.43

LICENSED PROFESSIONAL ENGINEER
LESLIE E. ROBERTSON
No 34360
UNIVERSITY OF THE STATE OF NEW YORK

DESIGNED

DRAWN
W. Clarke

REVIEWED

9-AB 14-9.2

SKILLING, HELLE, CHRISTIANSEN, ROBERTSON — Structural & Civil Engineers

PROJECT: THE WORLD TRADE CENTER | TITLE: FL.107-PH CONNECTION DETAILS-EXTERIOR WALLS FL110 | DATE: 12-14-76

DIVISIONS

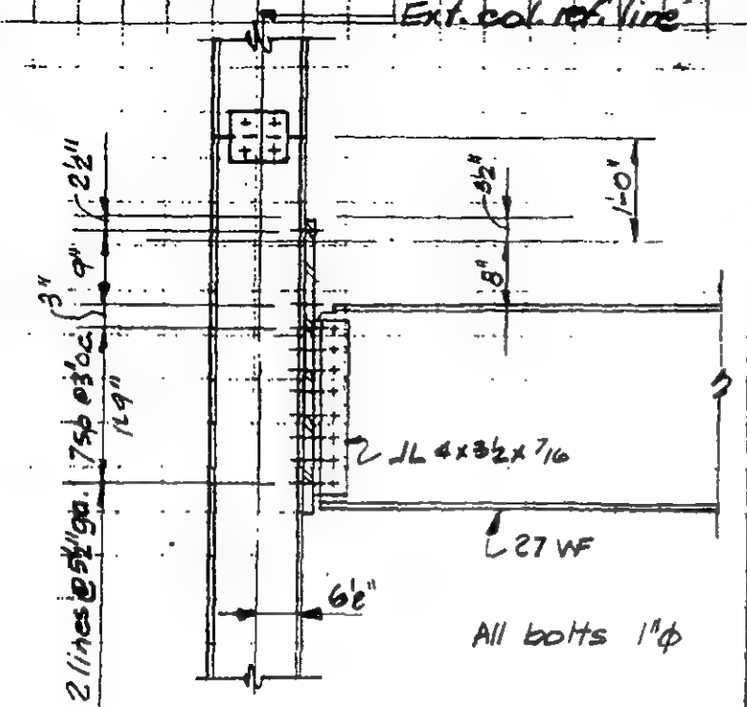

DETAIL 14-9.30B

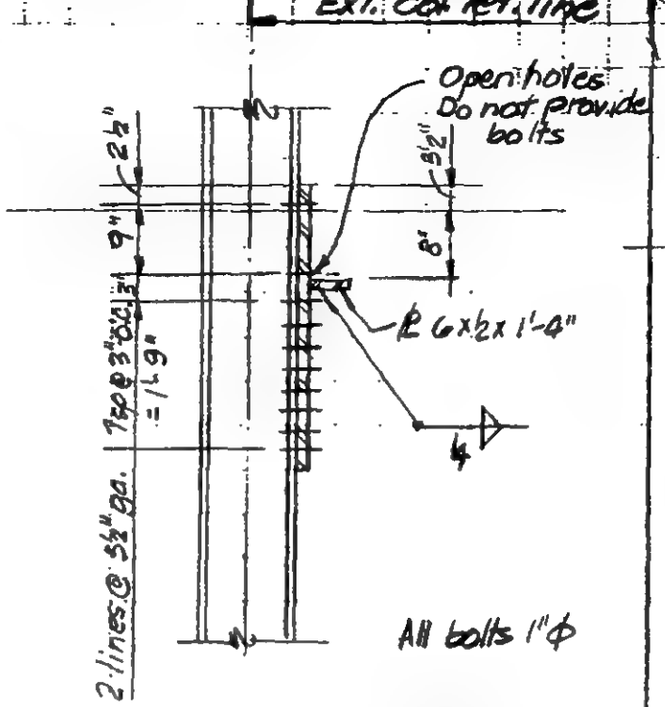

DETAIL 14-9.30C

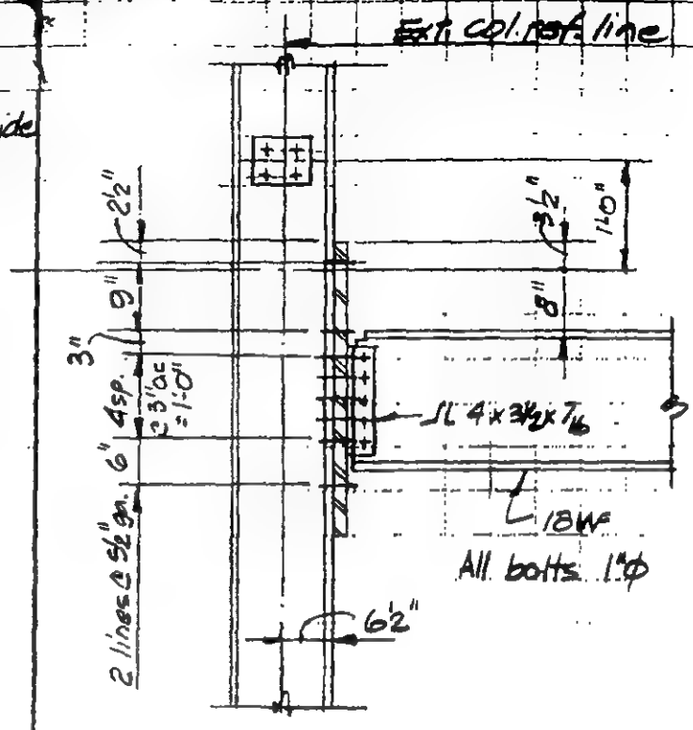

DETAIL 14-9.31B

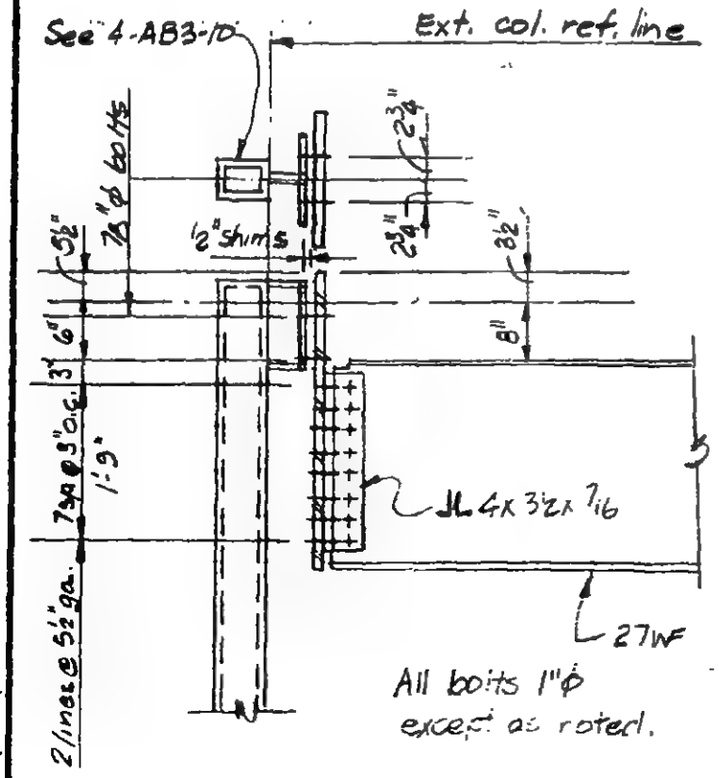

DETAIL 14-9.32B

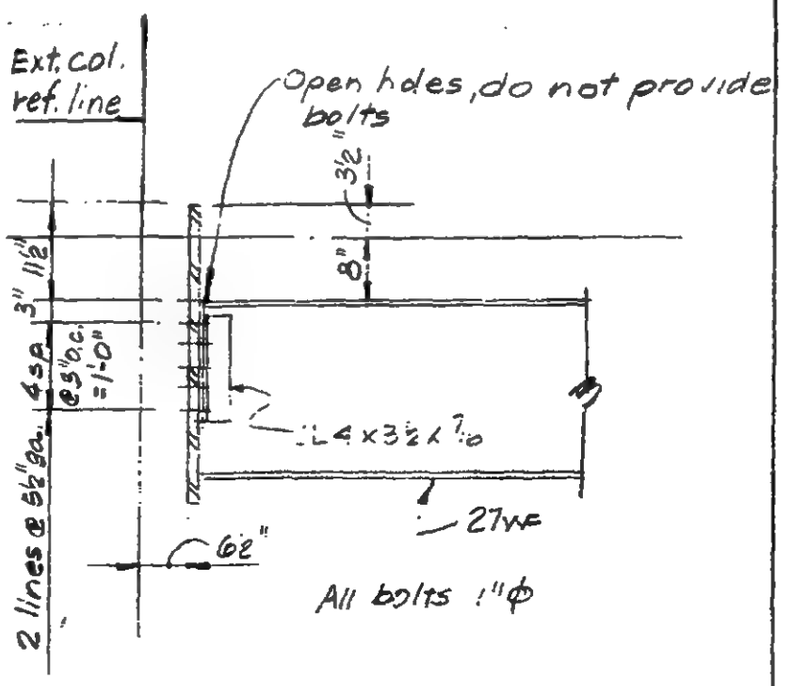

DETAIL 14-9.33B

LICENSED PROFESSIONAL ENGINEER
LESLIE E. ROBERTSON
No 34360
UNIVERSITY OF THE STATE OF NEW YORK

DESIGNED

DRAWN

REVIEWED

9-B/4-9.3

SKILLING, HELLE, CHRISTIANSEN, ROBERTSON — Structural & Civil Engineers

PROJECT: THE WORLD TRADE CENTER | TITLE: FL.107-P.H. CONNECTIONS - EXTERIOR WALL EL107 | DATE: 8-3-70

REVISIONS

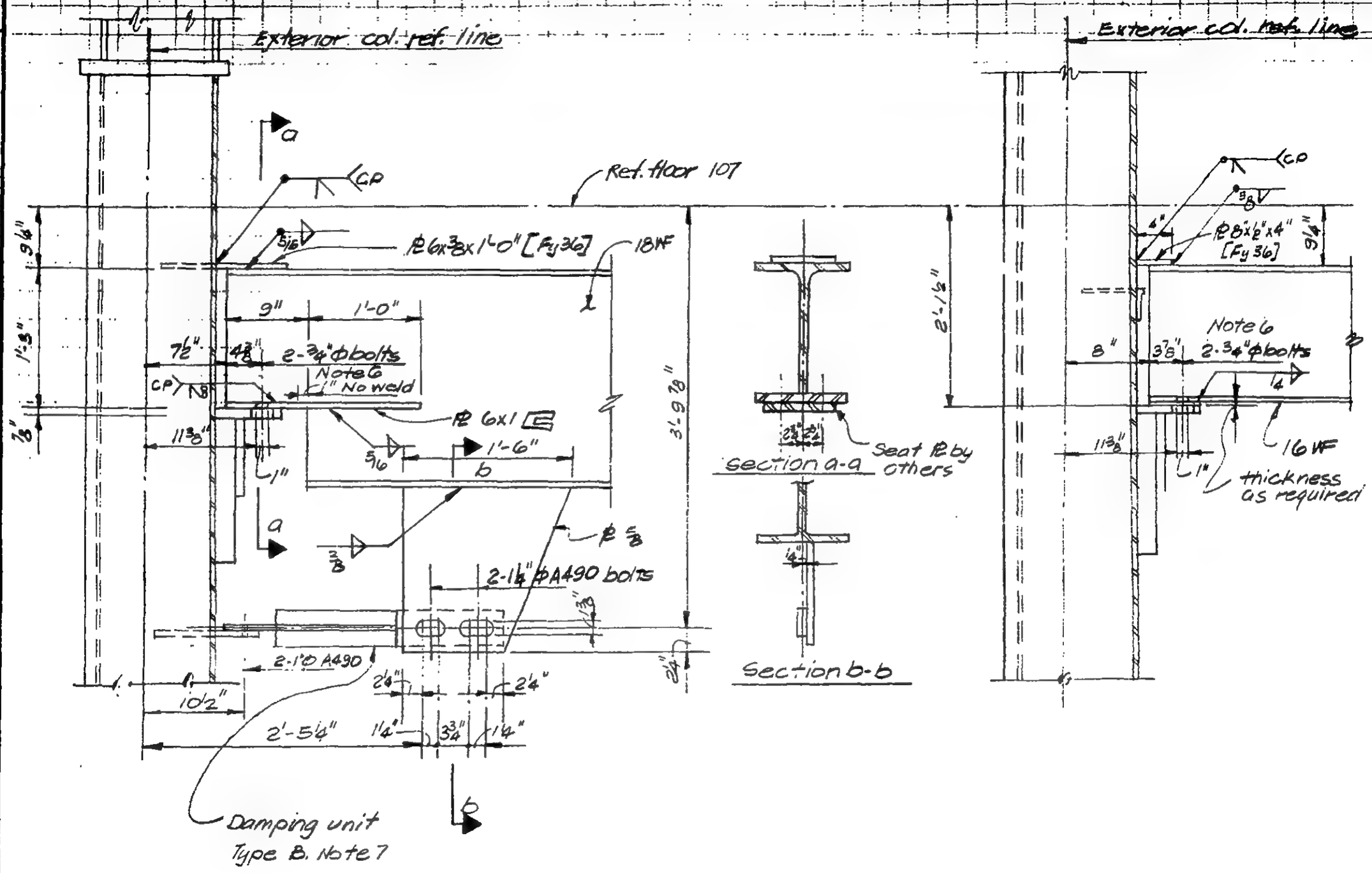

DETAIL 14-10A

DETAIL 14-10B

LICENSED PROFESSIONAL ENGINEER
LESLIE E. ROBERTSON
No 34360
UNIVERSITY OF THE STATE OF NEW YORK

DESIGNED

DRAWN
P. Ozelei

REVIEWED

9-A3-14-10

SKILLING, HELLE, CHRISTIANSEN, ROBERTSON — Structural & Civil Engineers

PROJECT THE WORLD TRADE CENTER | TITLE FI.107-PH CONNECTION DETAIL-FL.108 | DATE 4-1-70

REVISIONS

5/27/70

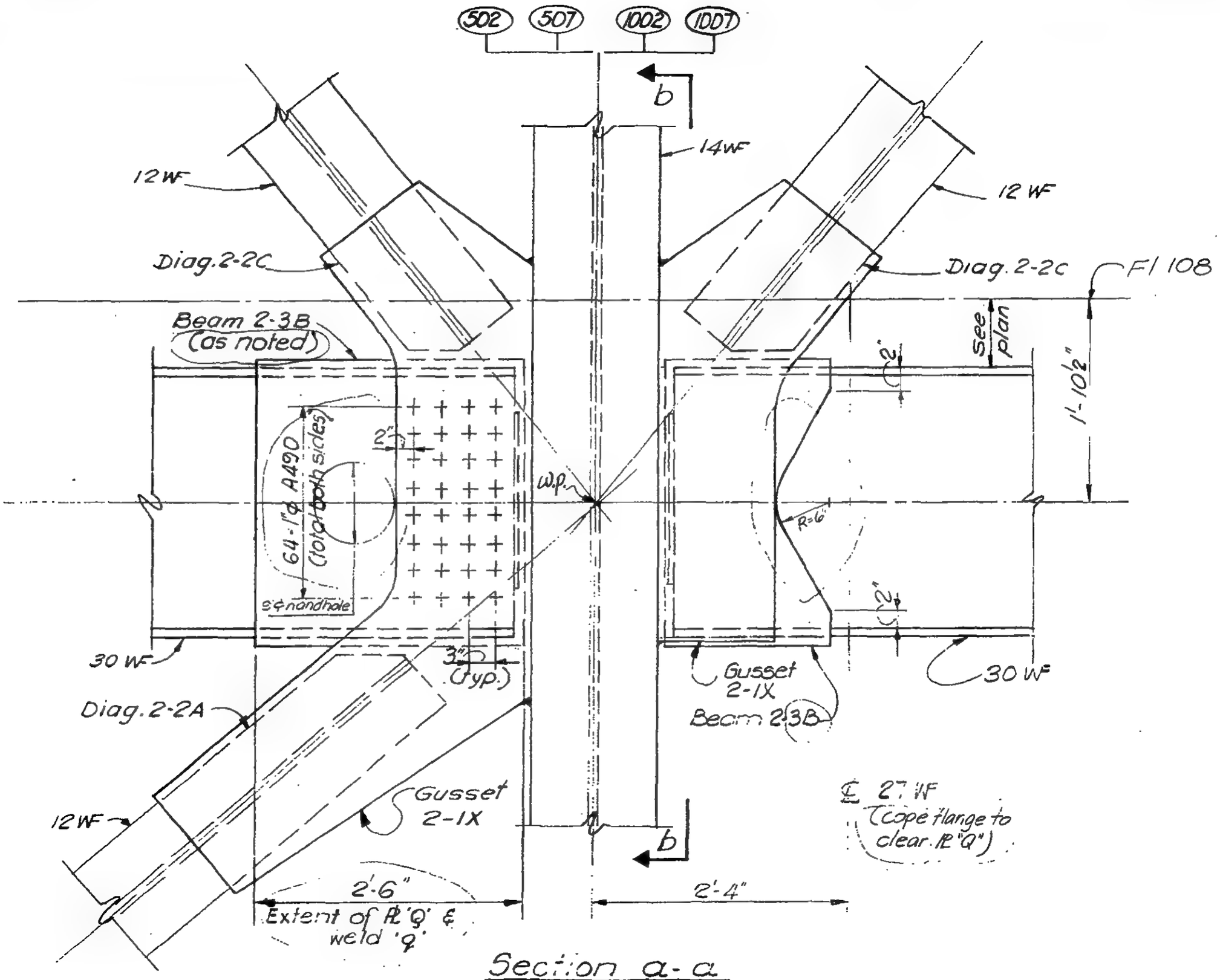

Section a-a

DETAIL 15-1A (Col. 502 as shown)

DETAIL 15-1B (Col. 507, 1002 & 1007 similar)

9-AB15-1.1

LICENSED PROFESSIONAL ENGINEER — LESLIE E. ROBERTSON — No 34360 — UNIVERSITY OF THE STATE OF NEW YORK

DESIGNED K. HWANG

DRAWN V.H.A

REVIEWED E. Drakos

DEWLING, HELLE, CHRISTIANSEN, ROBERTSON — Structural & Civil Engineers

PROJECT: THE WORLD TRADE CENTER | TITLE: FL. 107 - PH CONNECTION DETAILS - FL. 108 | DATE: 4 - 1 - 70

REVISIONS

5/27/70

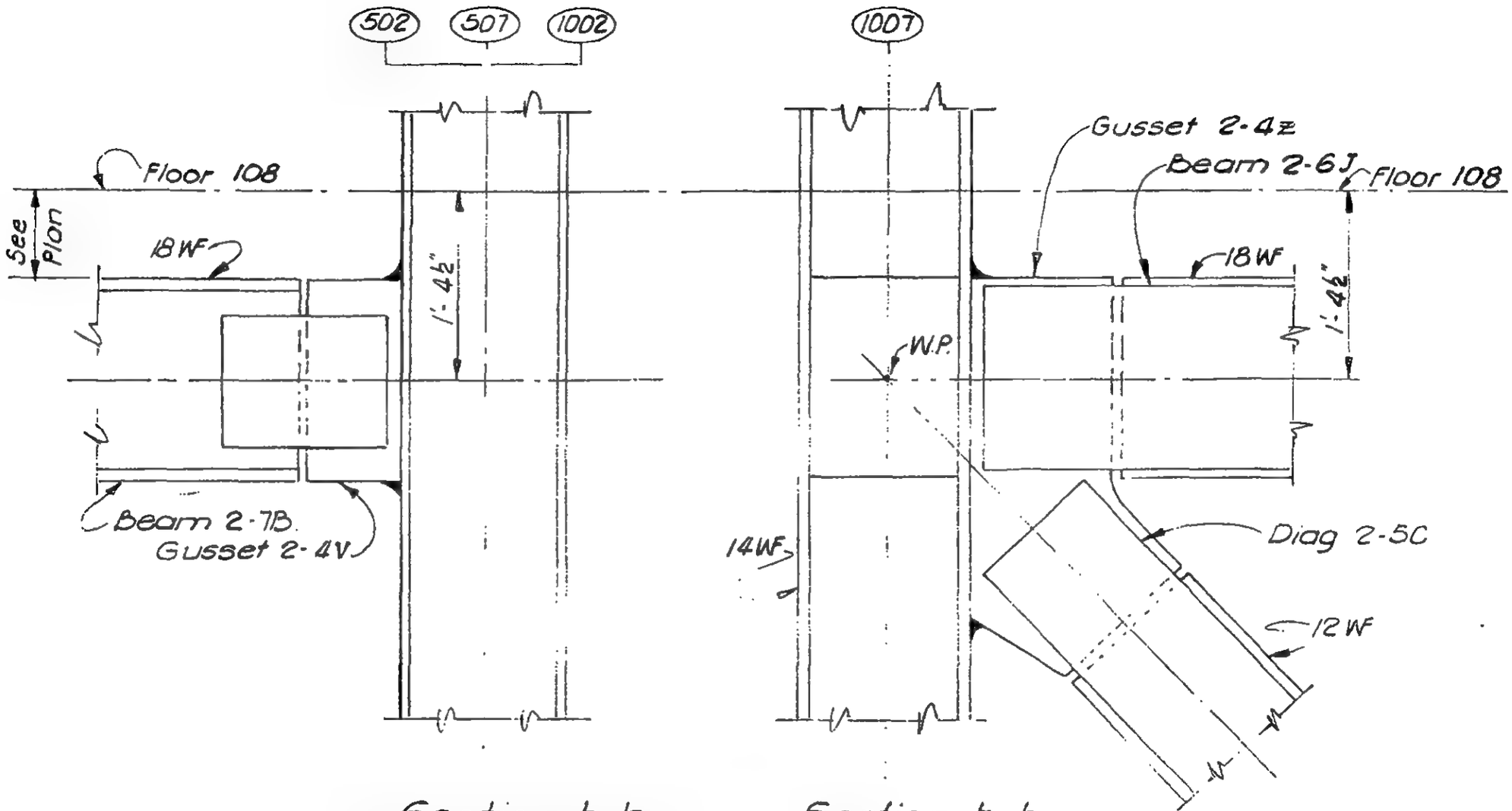

Section b-b
(Col. 502 & 507 as shown)
(Col. 1002 opp. hand)

Section b-b
(Col. 1007)

LICENSED PROFESSIONAL ENGINEER — LESLIE E. ROBERTSON — No. 34360 — UNIVERSITY OF THE STATE OF NEW YORK

DESIGNED: K. HWANG

DRAWN:

REVIEWED: E. Dracos

9 - AB15 - 1.2

SKILLING, HELLE, CHRISTIANSEN, ROBERTSON — Structural & Civil Engineers

PROJECT: THE WORLD TRADE CENTER

TITLE: FL. 107 - PH. CONNECTION DETAILS - FL. 108

DATE: 4-1-70

REVISIONS

5/27/70

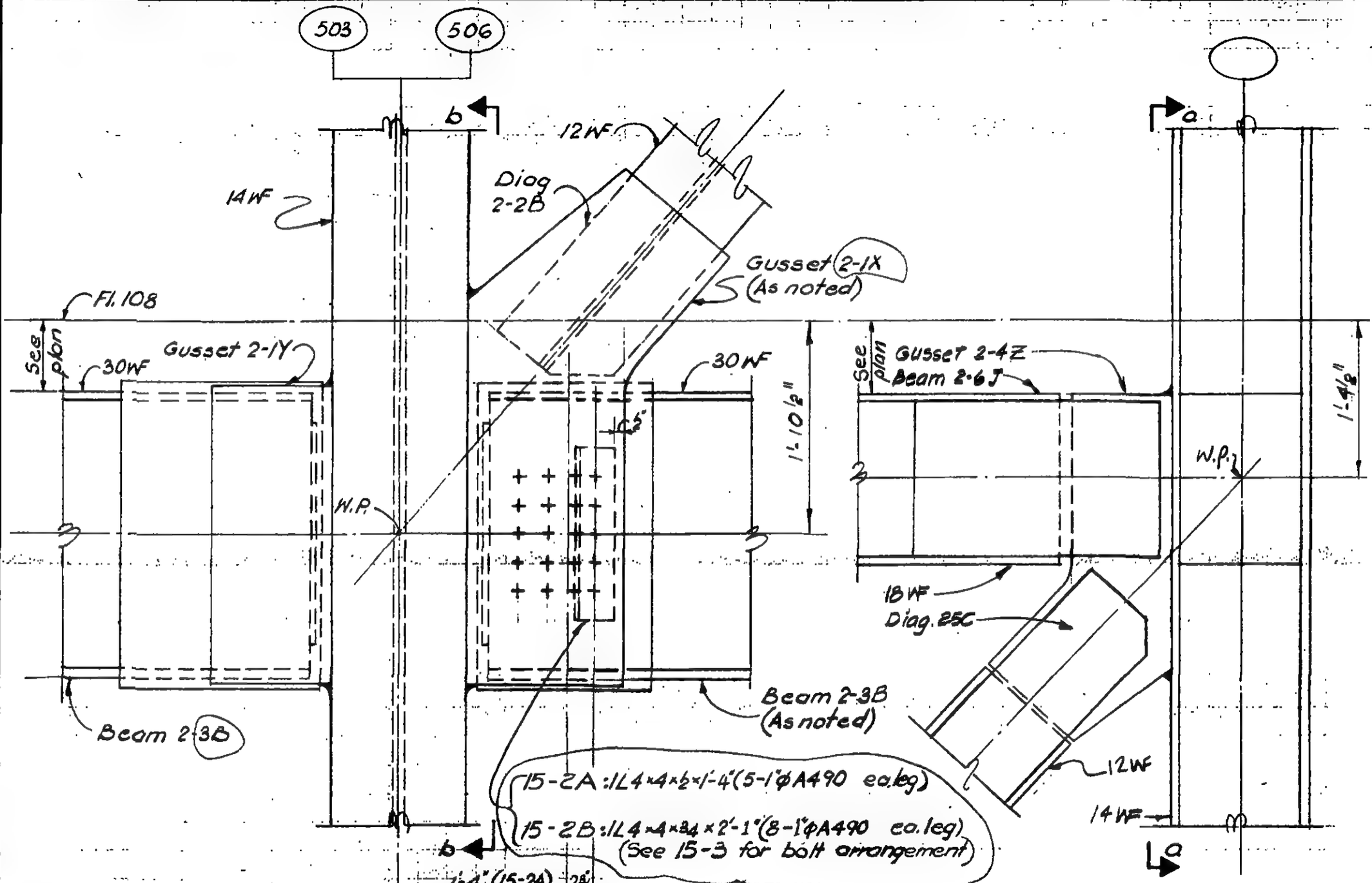

DETAIL 15-2A (col. 503 as shown)

DETAIL 15-2B (col. 506 opp. hand as noted)

LICENSED PROFESSIONAL ENGINEER — LESLIE E. ROBERTSON — No. 34360 — UNIVERSITY OF THE STATE OF NEW YORK

DESIGNED: K. HWANG

DRAWN: P. Dzeki

REVIEWED: E.J. Drakos

9-AB 15-2

SKILLING, HELLE, CHRISTIANSEN, ROBERTSON — Structural & Civil Engineers

PROJECT: THE WORLD TRADE CENTER

TITLE: FL. 107-PH. CONNECTION DETAILS - FL. 108

DATE: 4-1-70

REVISIONS

5/27/70

7/13/70

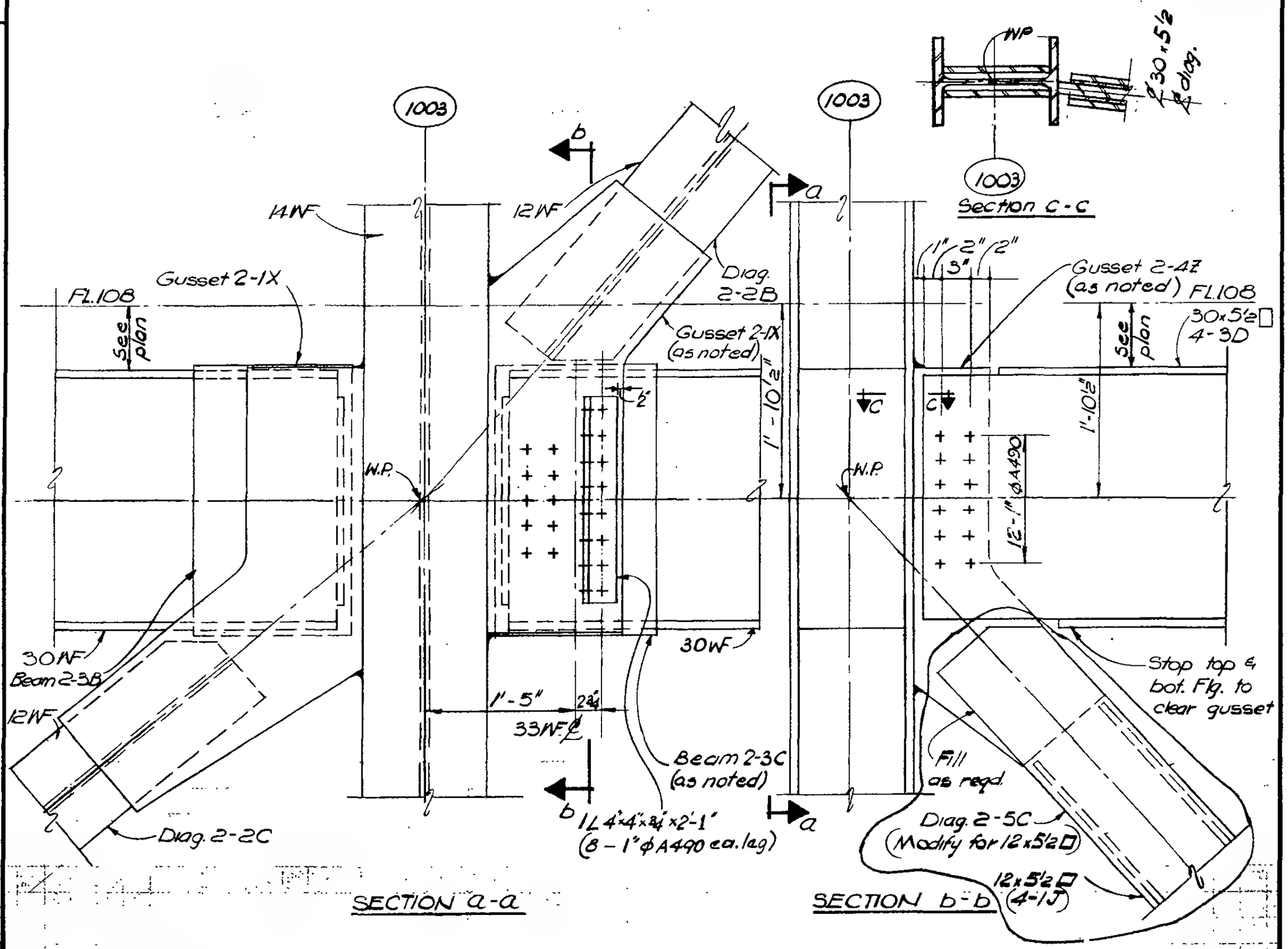

SECTION a-a

SECTION b-b

DETAIL 15-3

LICENSED PROFESSIONAL ENGINEER — LESLIE E. ROBERTSON — No. 34360 — UNIVERSITY OF THE STATE OF NEW YORK

DESIGNED: T. HWANG

DRAWN: W. Clarke

REVIEWED: E. Drakos

9-AB15-3

SKILLING, HELLE, CHRISTIANSEN, ROBERTSON — Structural & Civil Engineers

PROJECT THE WORLD TRADE CENTER | TITLE FL. 107 PH. CONNECTION DETAIL - FL 108 | DATE 4-1-70

REVISIONS

5/27/70

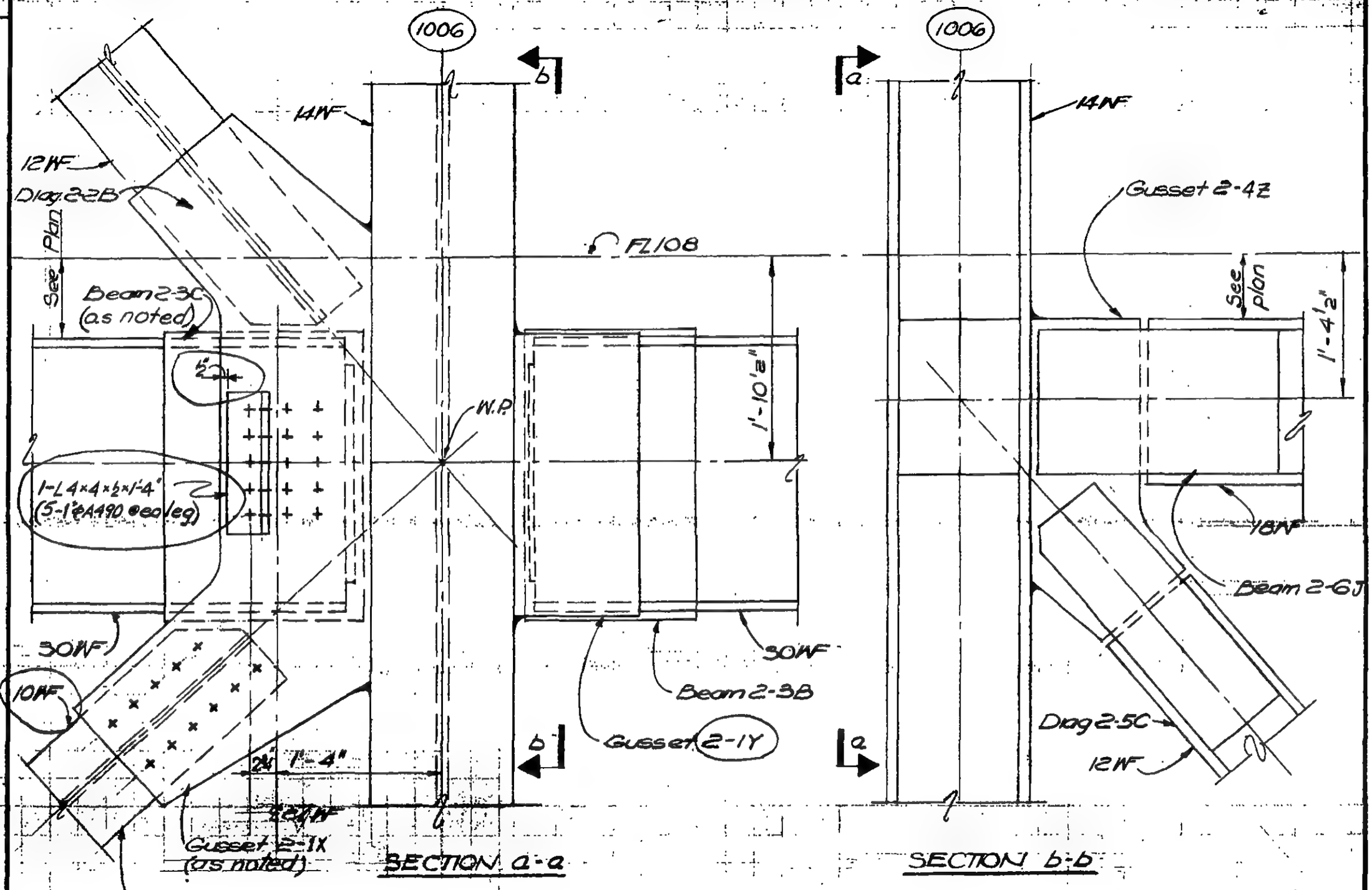

LICENSED PROFESSIONAL ENGINEER — LESLIE E. ROBERTSON — No. 34860 — UNIVERSITY OF THE STATE OF NEW YORK

DESIGNED C. HWANG

DRAWN W. Clarke

REVIEWED E. Drayos

DETAIL 15-4

9-AB15-4

SKILLING, HELLE, CHRISTIANSEN, ROBERTSON — Structural & Civil Engineers

PROJECT: THE WORLD TRADE CENTER | TITLE: FL 107 - PH CONNECTION DETAILS - FL. 108 | DATE: 4-1-70

REVISIONS

5/27/70
8/3/70

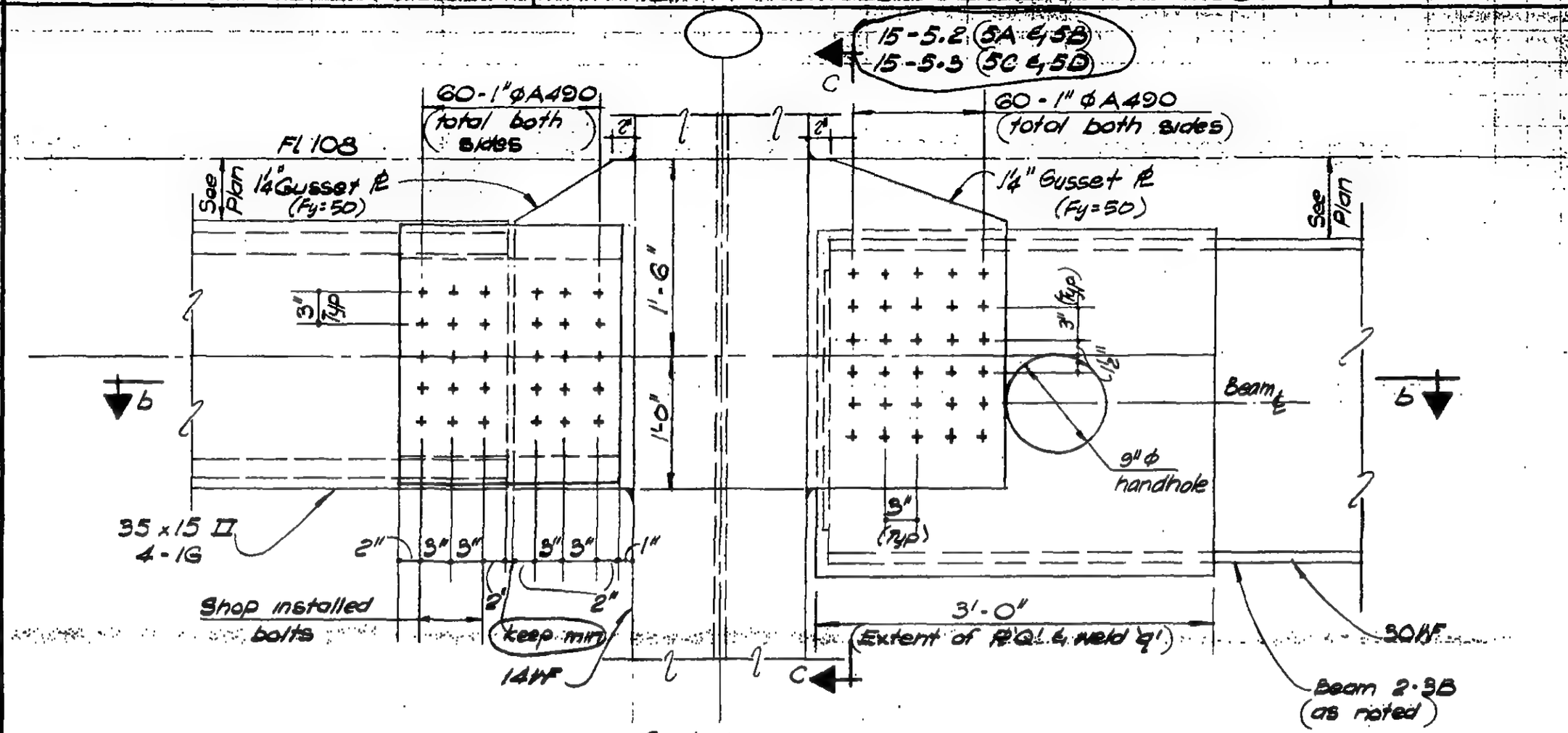

Section a-a

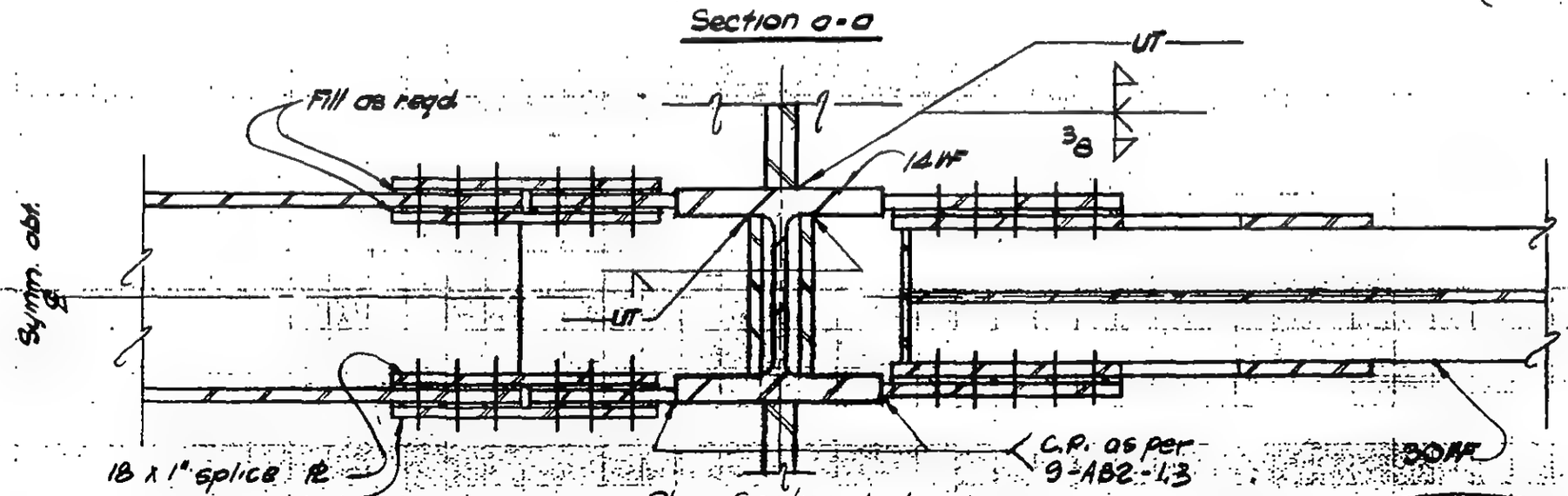

Plan Section b-b

DETAIL 15-5A Tower "A": Cols 501 & 1001 as shown. Tower "B": Col. 501 as shown
DETAIL 15-5B Tower "A": Cols 508 & 1008 opp hand. Tower "B": Col. 1008 opp hand
DETAIL 15-5C Tower "B": Col. 1001 as shown } & as noted.
DETAIL 15-5D Tower "B": Col. 508 opp hand }

9-AB15-5.1

LICENSED PROFESSIONAL ENGINEER LESLIE E. ROBERTSON No. 34360 UNIVERSITY OF THE STATE OF NEW YORK

DESIGNED: [signature]
DRAWN: W. Clarke
REVIEWED: E. Dracos

SKILLING, HELLE, CHRISTIANSEN, ROBERTSON — Structural & Civil Engineers

PROJECT: THE WORLD TRADE CENTER | TITLE: FL 107 - PH. CONNECTION DETAILS - FL 108 | DATE: 4-1-70

REVISIONS

5/27/70

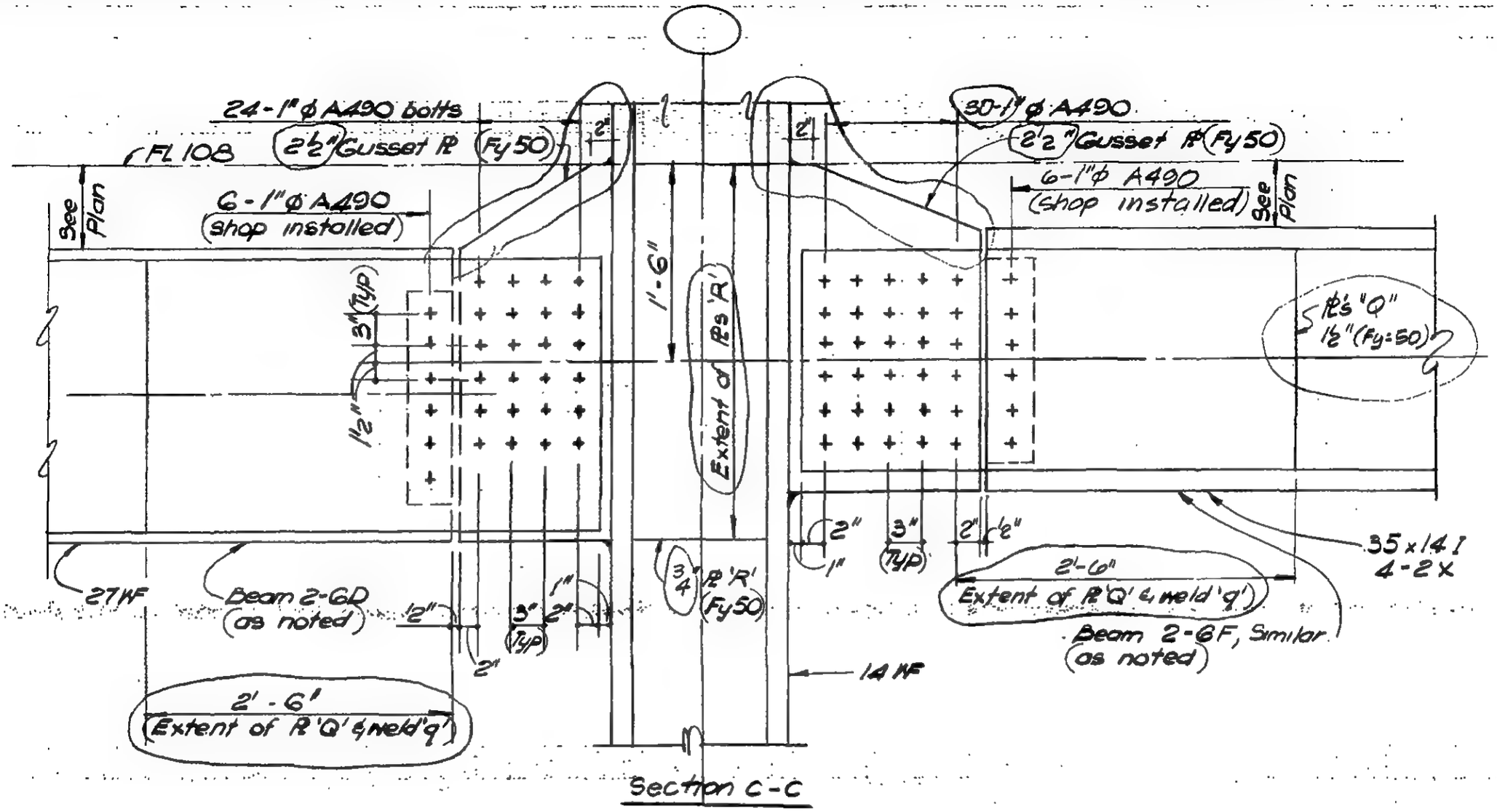

LICENSED PROFESSIONAL ENGINEER — LESLIE E. ROBERTSON — No. 34860 — UNIVERSITY OF THE STATE OF NEW YORK

DESIGNED: A. bm

DRAWN: M. Clarke

REVIEWED: E. Drakos

9-AB15-5.2

SKILLING, HELLE, CHRISTIANSEN, ROBERTSON — Structural Steel Engineers

PROJECT: THE WORLD TRADE CENTER — TITLE: PLOT-PH. CONNECTION DETAILS-AT 108 — DWG. NO. SC-5

REVISIONS

9-8-76

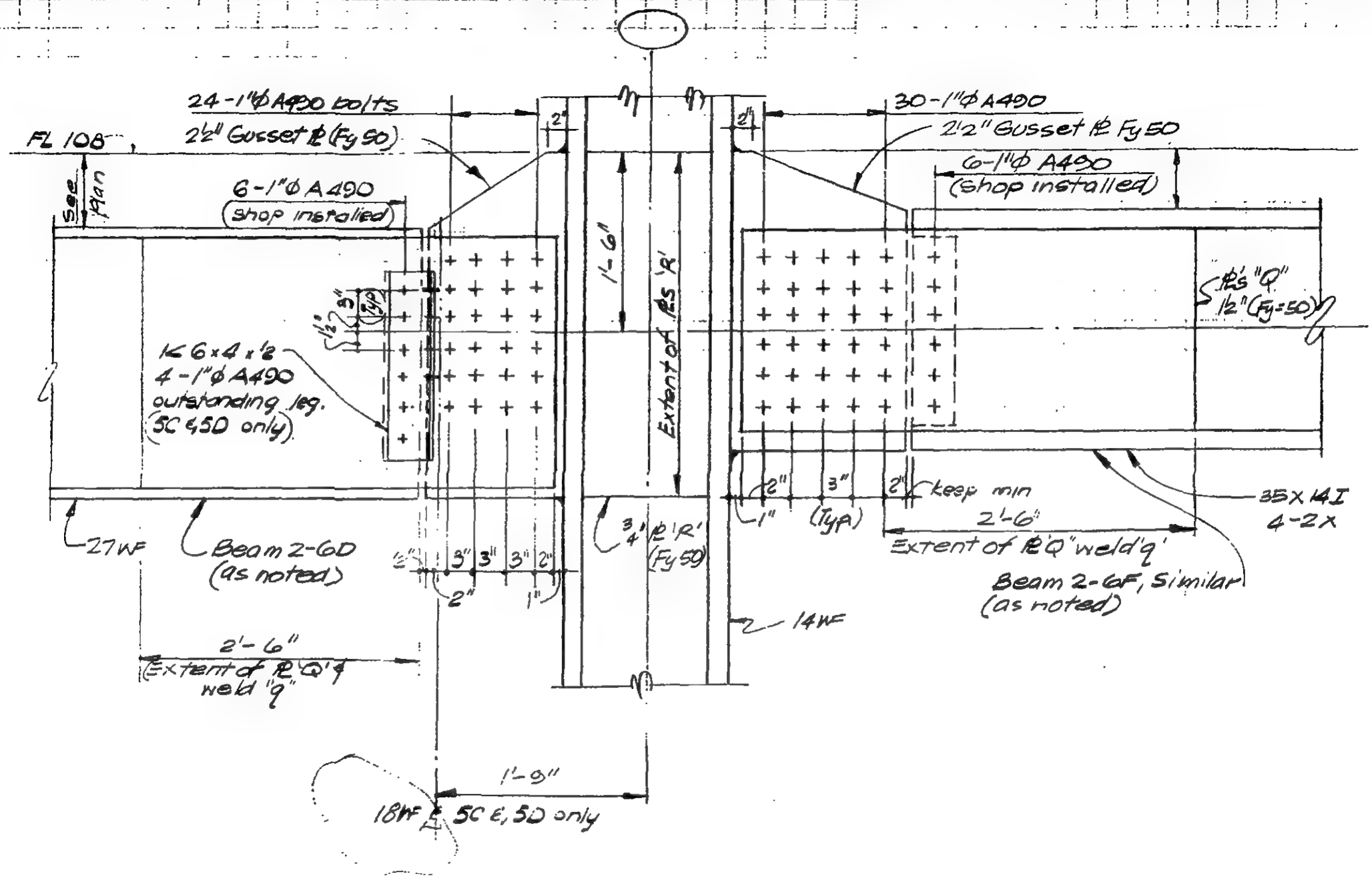

Section C-C

LICENSED PROFESSIONAL ENGINEER — LESLIE E. ROBERTSON — No. 34960 — UNIVERSITY OF THE STATE OF NEW YORK

DESIGNED

DRAWN
P. Ozeki

REVIEWED

9-615-5.3

SKILLING, HELLE, CHRISTIANSEN, ROBERTSON — Structural & Civil Engineers

PROJECT: THE WORLD TRADE CENTER | TITLE: FL. 107 PH. CONNECTION DETAILS - FL 108 | DATE: 4-1-70

REVISIONS

5/27/70

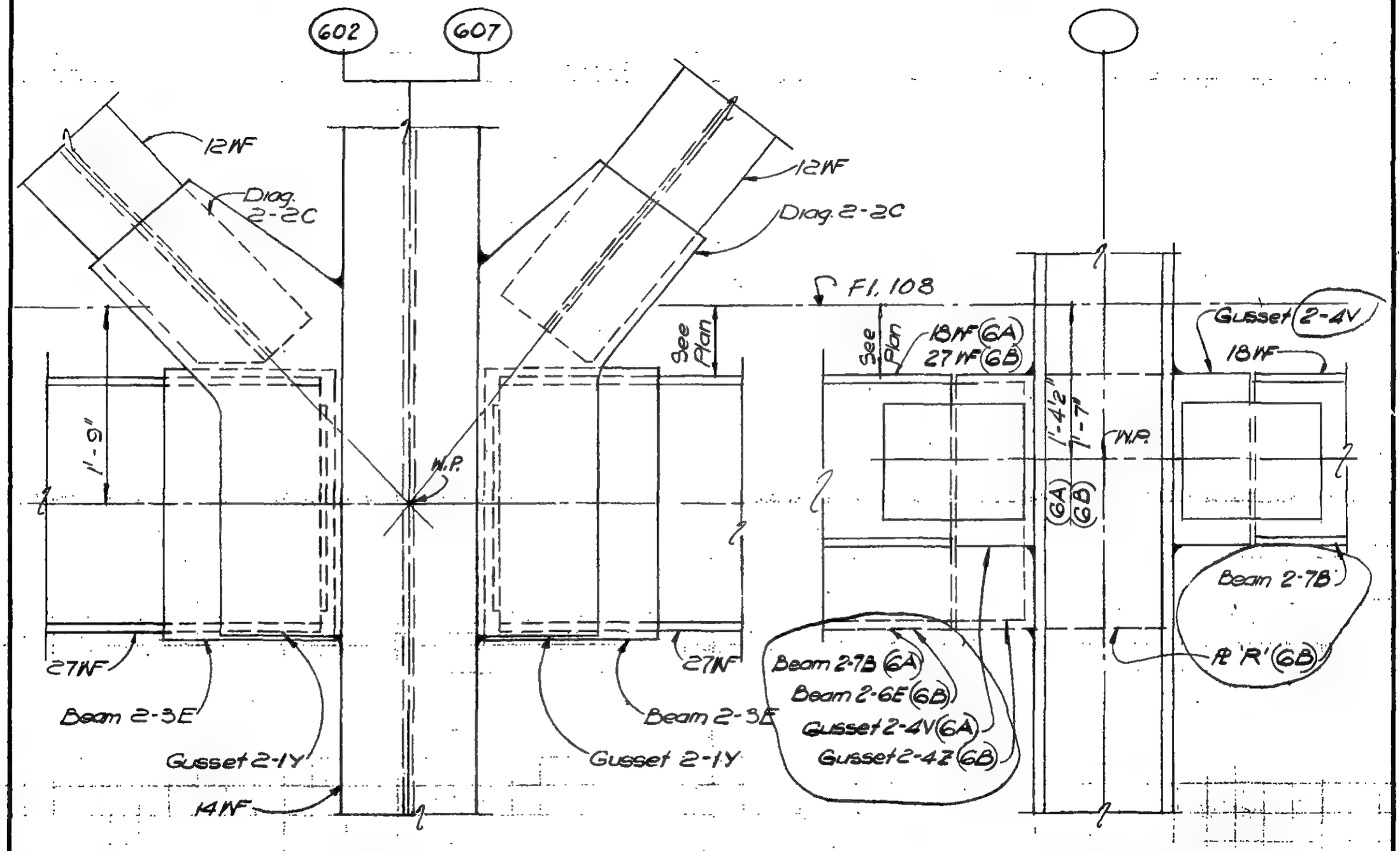

SECTION a-a

SECTION b-b

DETAIL 15-6A (col. 602 as shown)

DETAIL 15-6B (col. 607 opp hand as noted)

LICENSED PROFESSIONAL ENGINEER — LESLIE E. ROBERTSON — No. 34360 — UNIVERSITY OF THE STATE OF NEW YORK

DESIGNED: J. HWANG

DRAWN: W. Clarke

REVIEWED: E. Drakos

9-AB15-6

SKILLING, HELLE, CHRISTIANSEN, ROBERTSON — Structural & Civil Engineers

PROJECT THE WORLD TRADE CENTER | TITLE Fl. 107-PH CONNECTION DETAIL-FL. 108 | DATE 4-1-70

REVISIONS

5-27-70

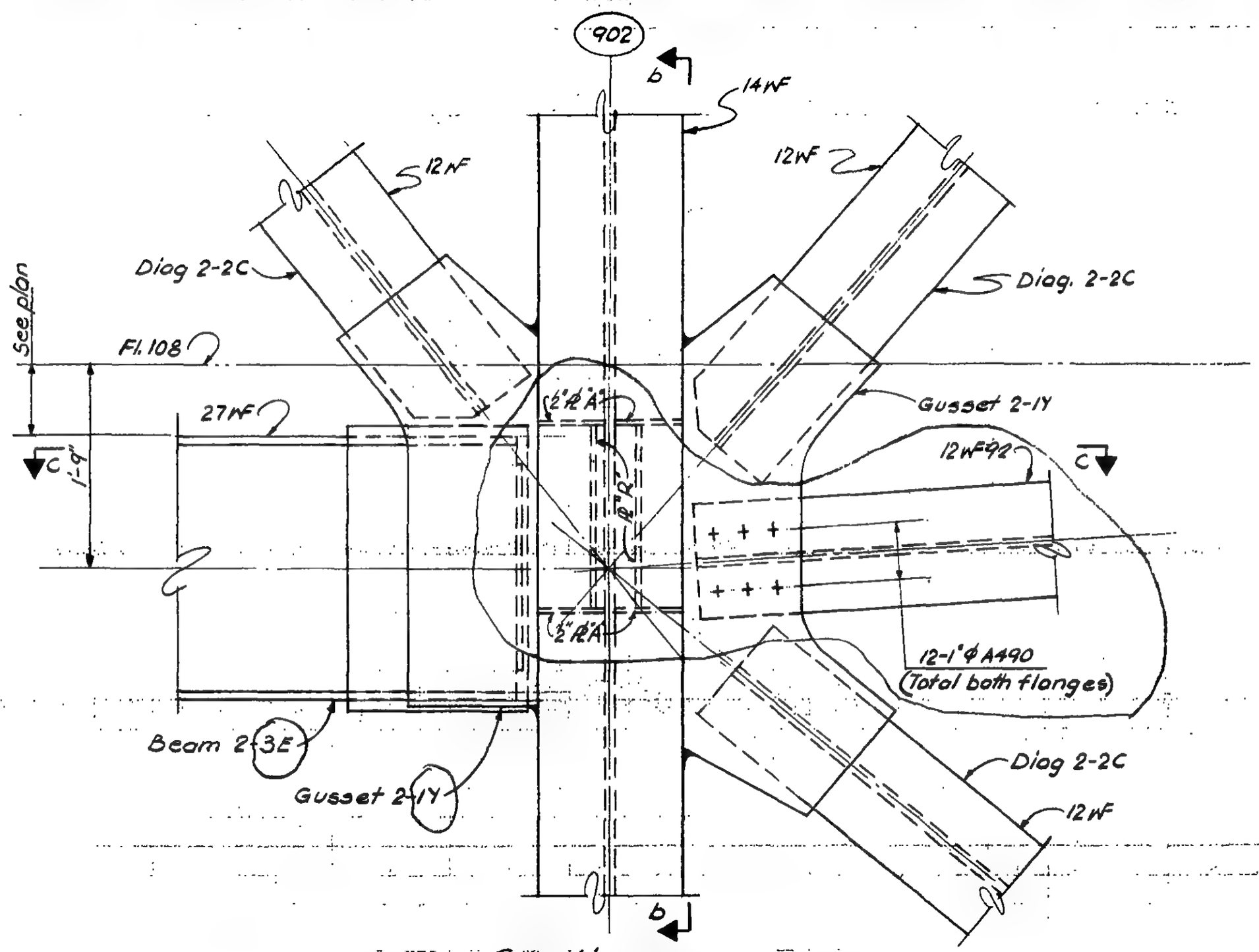

Section a-a

DETAIL 15-7

LICENSED PROFESSIONAL ENGINEER — LESLIE E. ROBERTSON — No. 34360 — UNIVERSITY OF THE STATE OF NEW YORK

DESIGNED L. Von

DRAWN D. Huggins

REVIEWED E. Drakos

9-AB 15-7.1

SKILLING, HELLE, CHRISTIANSEN, ROBERTSON — Structural & Civil Engineers

PROJECT: THE WORLD TRADE CENTER | TITLE: FL 107 - PH CONNECTION DETAILS - FL 108 | DATE: 4-1-70

EVISIONS

5-27-70

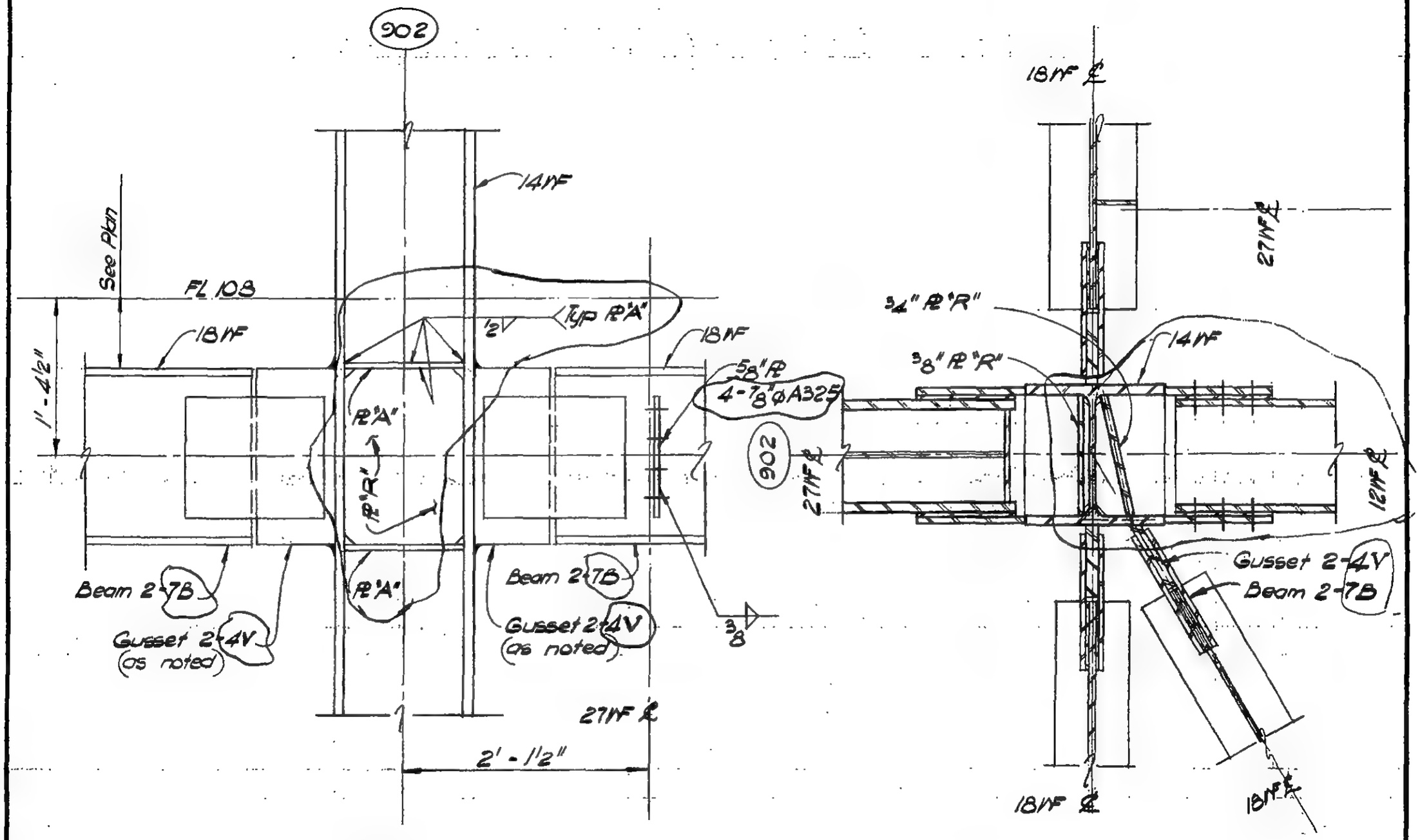

Section b-b

Section c-c

LICENSED PROFESSIONAL ENGINEER — LESLIE E. ROBERTSON — No. 34360 — UNIVERSITY OF THE STATE OF NEW YORK

DESIGNED: H. Von

DRAWN: M. Clarke

REVIEWED: E. Drakos

9-AB15-7.2

SKILLING, HELLE, CHRISTIANSEN, ROBERTSON — Structural & Civil Engineers

PROJECT: THE WORLD TRADE CENTER | TITLE: FL. 107-PH CONNECTION DETAIL - FL. 108 | DATE: 4-1-70

REVISIONS

5/27/70

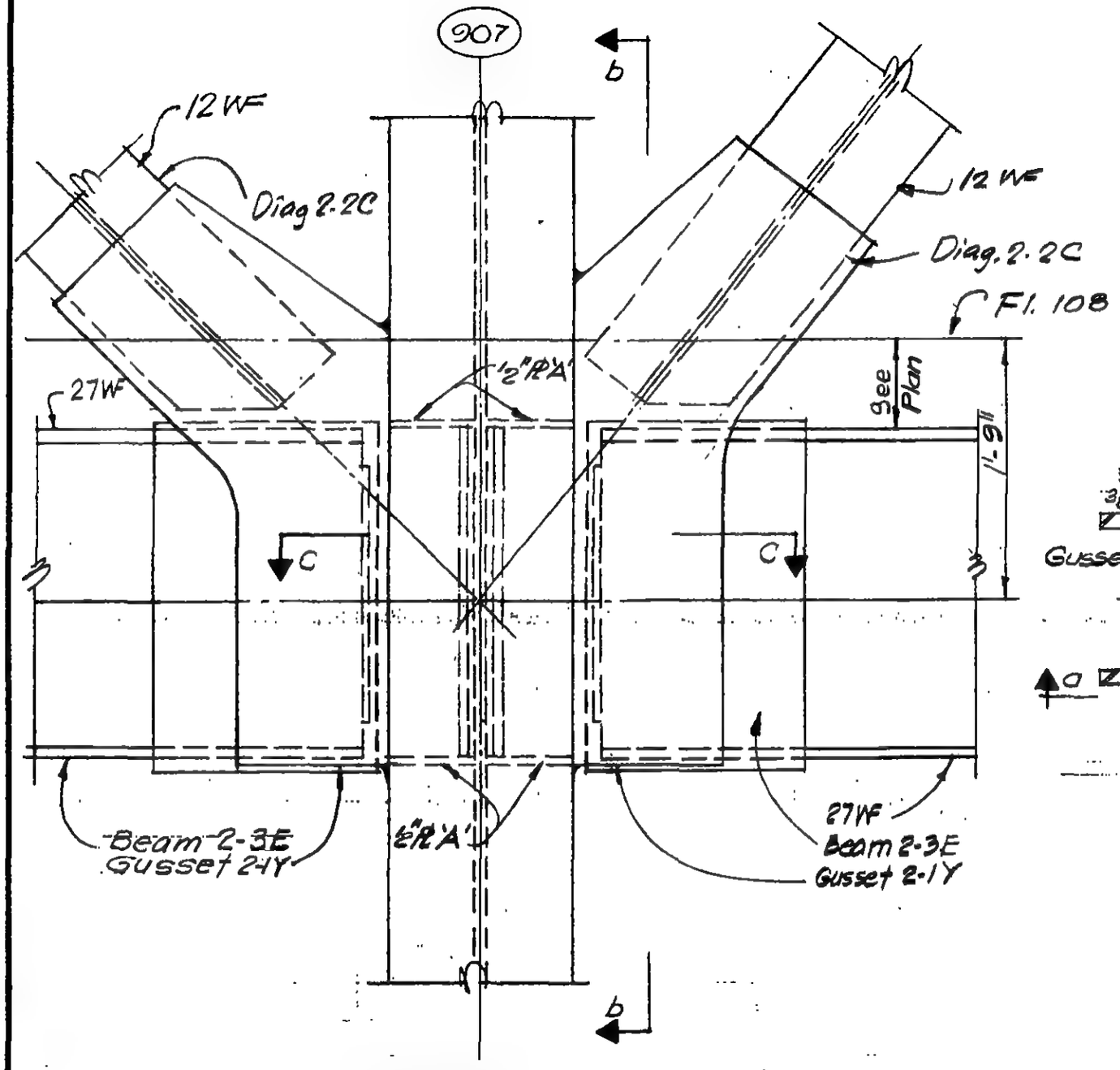

Section a-a

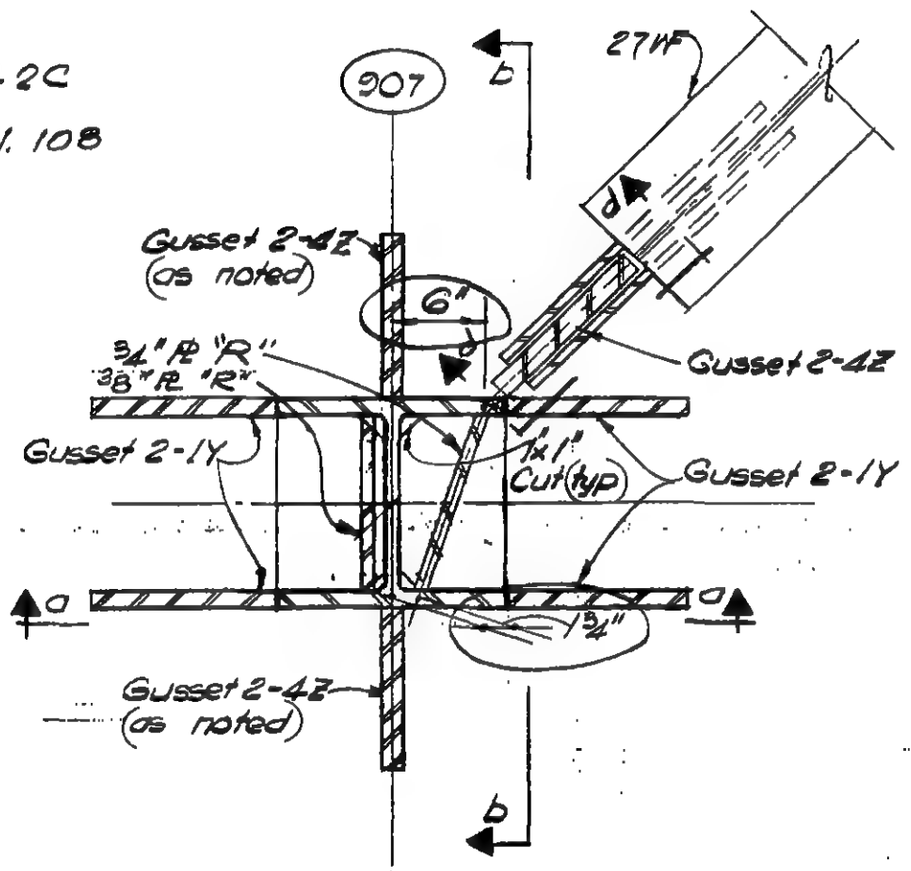

Section C-C

DETAIL 15-8

LICENSED PROFESSIONAL ENGINEER — LESLIE E. ROBERTSON — No. 34360 — UNIVERSITY OF THE STATE OF NEW YORK

DESIGNED: J. HWANG

DRAWN: P. Cretti

REVIEWED: E. Drakos

9-AB15-8.1

SKILLING, HELLE, CHRISTIANSEN, ROBERTSON — Structural & Civil Engineers

PROJECT: THE WORLD TRADE CENTER | TITLE: Fl. 107-PH CONNECTION DETAIL - FL. 108 | DATE: 4-1-70

REVISIONS

5/27/70

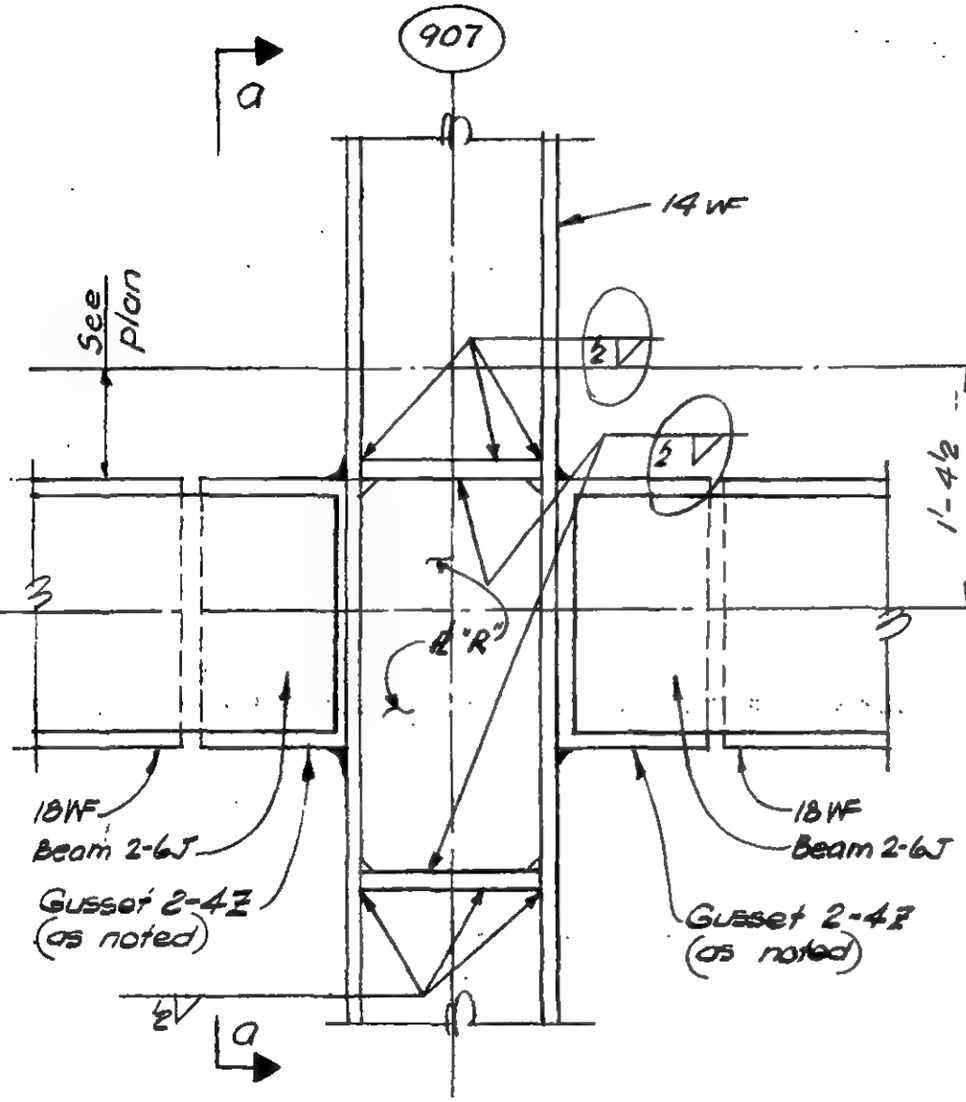

Section b-b

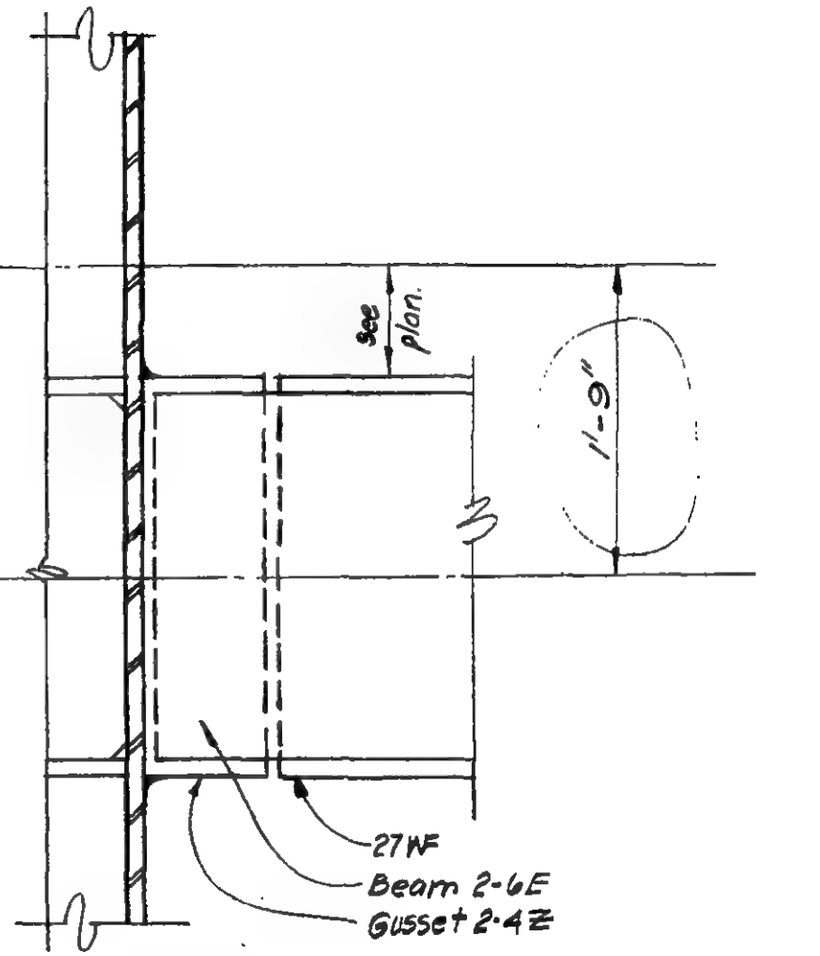

Section d-d

DETAIL 15-8

LICENSED PROFESSIONAL ENGINEER — LESLIE E. ROBERTSON — No. 34860 — UNIVERSITY OF THE STATE OF NEW YORK

DESIGNED: H WANG

DRAWN: P. Ozaki

REVIEWED: E. Dracos

9-AB 15-8.2

SKILLING, HELLE, CHRISTIANSEN, ROBERTSON — Structural & Civil Engineers

PROJECT: THE WORLD TRADE CENTER | TITLE: FL. 107 PH. CONNECTION DETAILS = FL. 108 | DATE: 4 - 1 - 70

REVISIONS

5/27/70

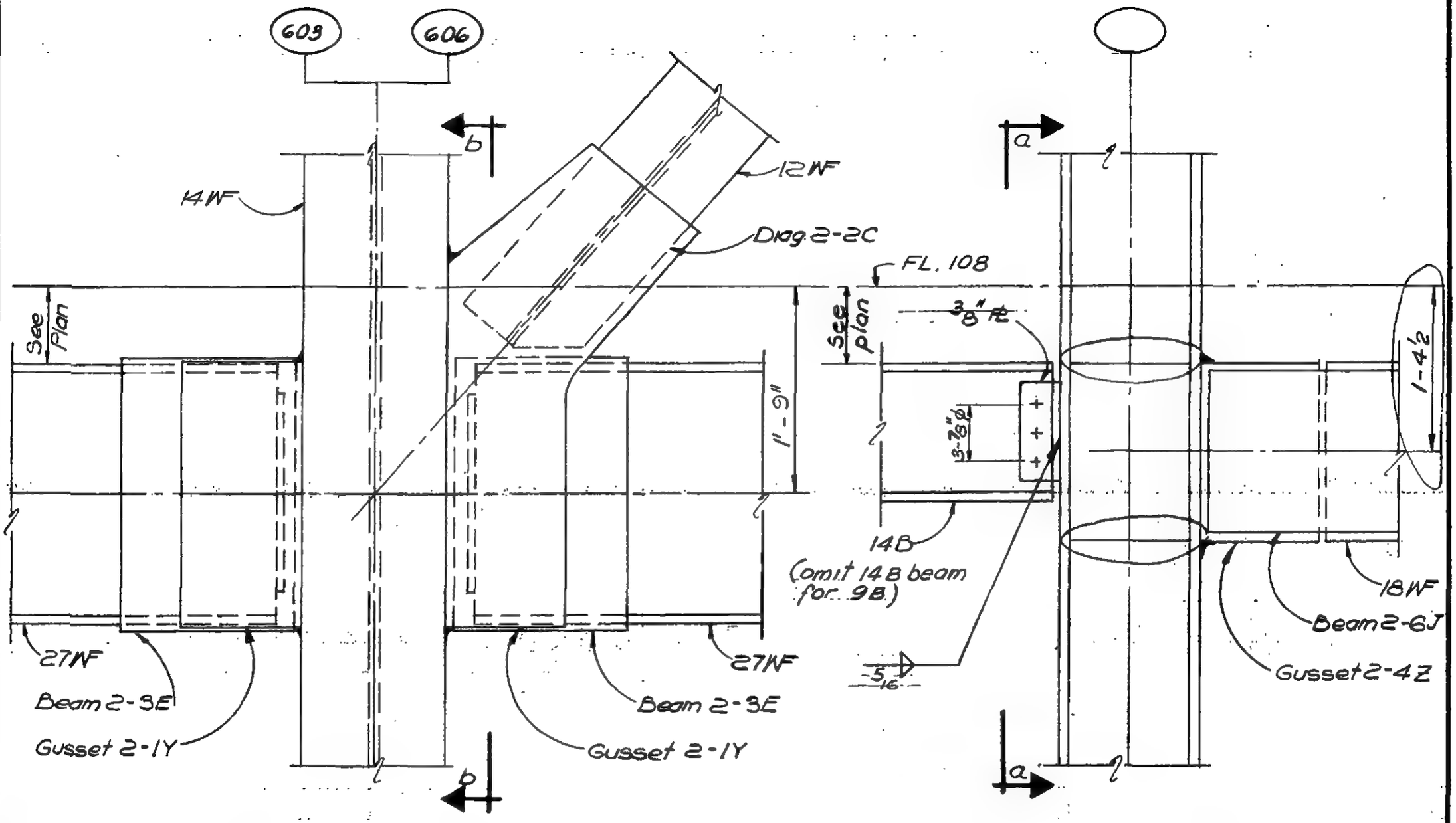

SECTION a-a

SECTION b-b

DETAIL 15-9A (col. 603, as shown)
DETAIL 15-9B (col. 606, opphand, as noted)

LICENSED PROFESSIONAL ENGINEER — LESLIE E. ROBERTSON — No. 34960 — UNIVERSITY OF THE STATE OF NEW YORK

DESIGNED: ', HWANG
DRAWN: N. Clarke
REVIEWED: E. Dravos

9-AB15-9

SKILLING, HELLE, CHRISTIANSEN, ROBERTSON — Structural & Civil Engineers

PROJECT: THE WORLD TRADE CENTER | TITLE: FL 107-PH, CONNECTION DETAIL - FL 108 | DATE: 4-1-70

REVISIONS

3/27/70

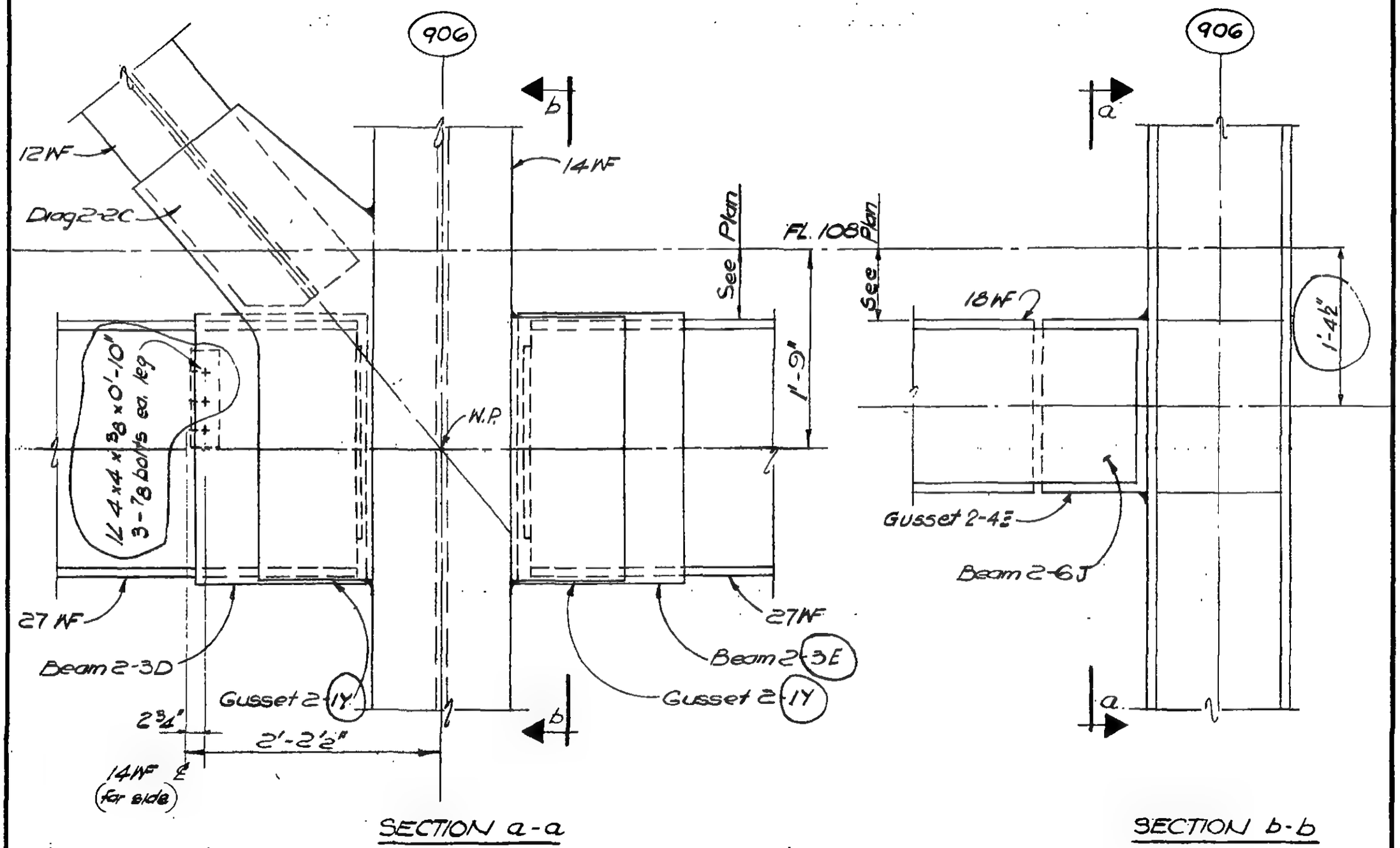

SECTION a-a

SECTION b-b

DETAIL 15-10

LICENSED PROFESSIONAL ENGINEER — LESLIE E. ROBERTSON — No. 34360 — UNIVERSITY OF THE STATE OF NEW YORK

DESIGNED: HWANG

DRAWN: W. Clarke

REVIEWED: E. Drakos

9-AB15-10

SKILLING, HELLE, CHRISTIANSEN, ROBERTSON — Structural & Civil Engineers

PROJECT: THE WORLD TRADE CENTER | TITLE: FL.107-PH. CONNECTION DETAILS - FL.108 | DATE: 4-1-70

REVISIONS

5/27/70

7-15-70

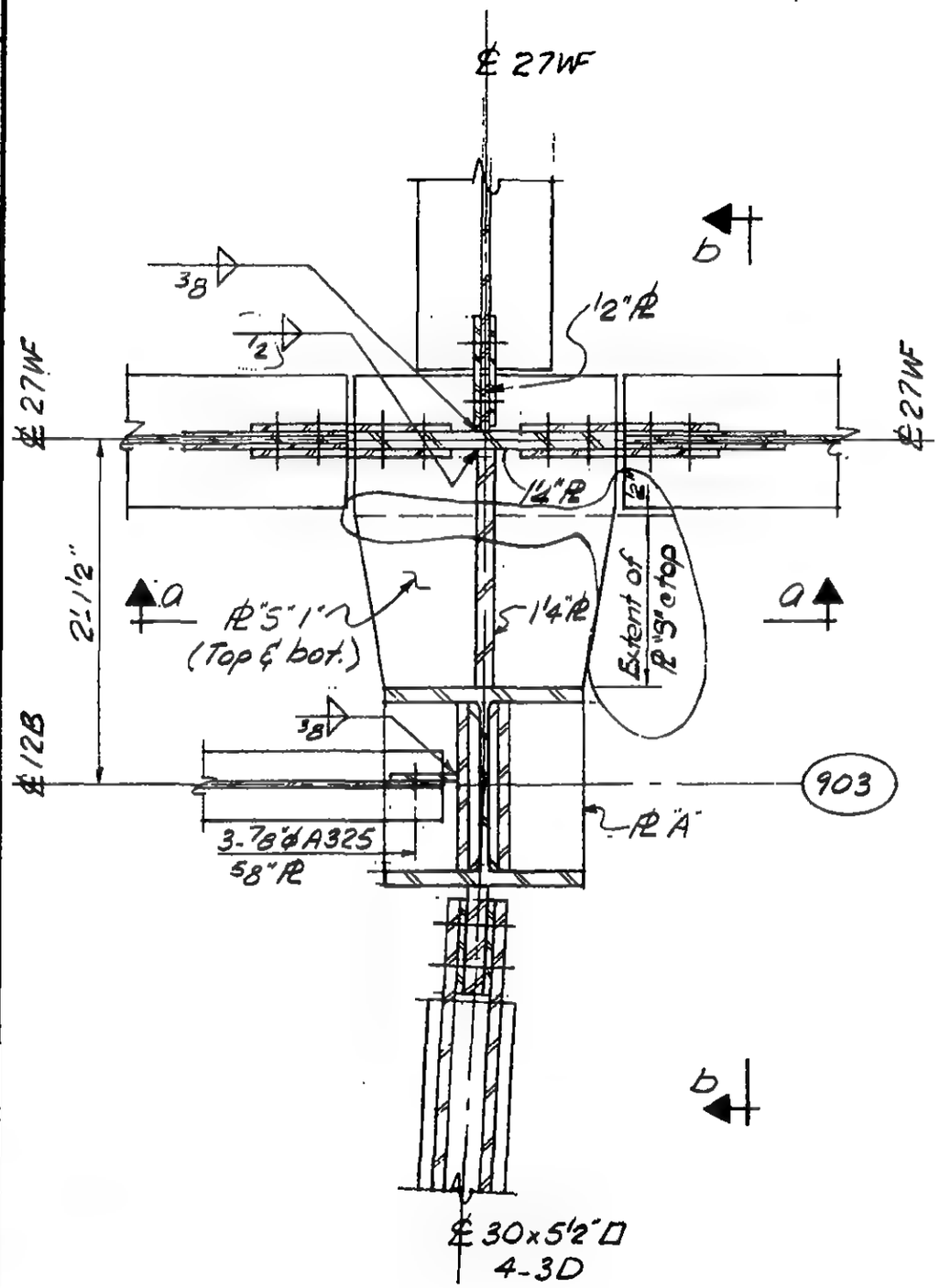

PLAN

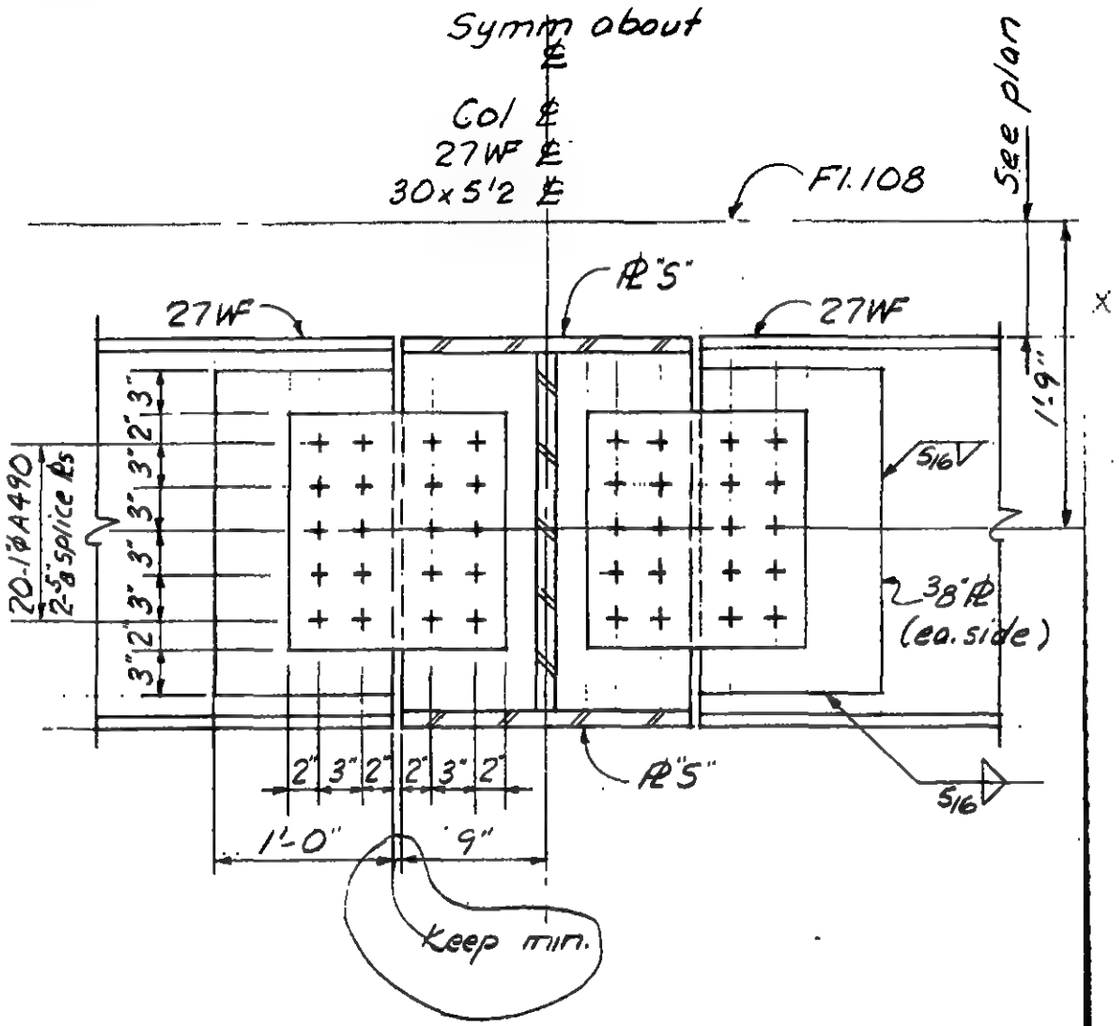

Section a-a

LICENSED PROFESSIONAL ENGINEER — LESLIE E. ROBERTSON — No. 34360 — UNIVERSITY OF THE STATE OF NEW YORK

DESIGNED: A. Von

DRAWN: A. FRANQUI

REVIEWED: E. Drakos

9-AB15-11.1

SKILLING, HELLE, CHRISTIANSEN, ROBERTSON — Structural & Civil Engineers

PROJECT THE WORLD TRADE CENTER | TITLE Fl. 107-PH CONNECTION DETAIL - FL. 108 | DATE 4-1-70

REVISIONS

5-27-70

7-15-70

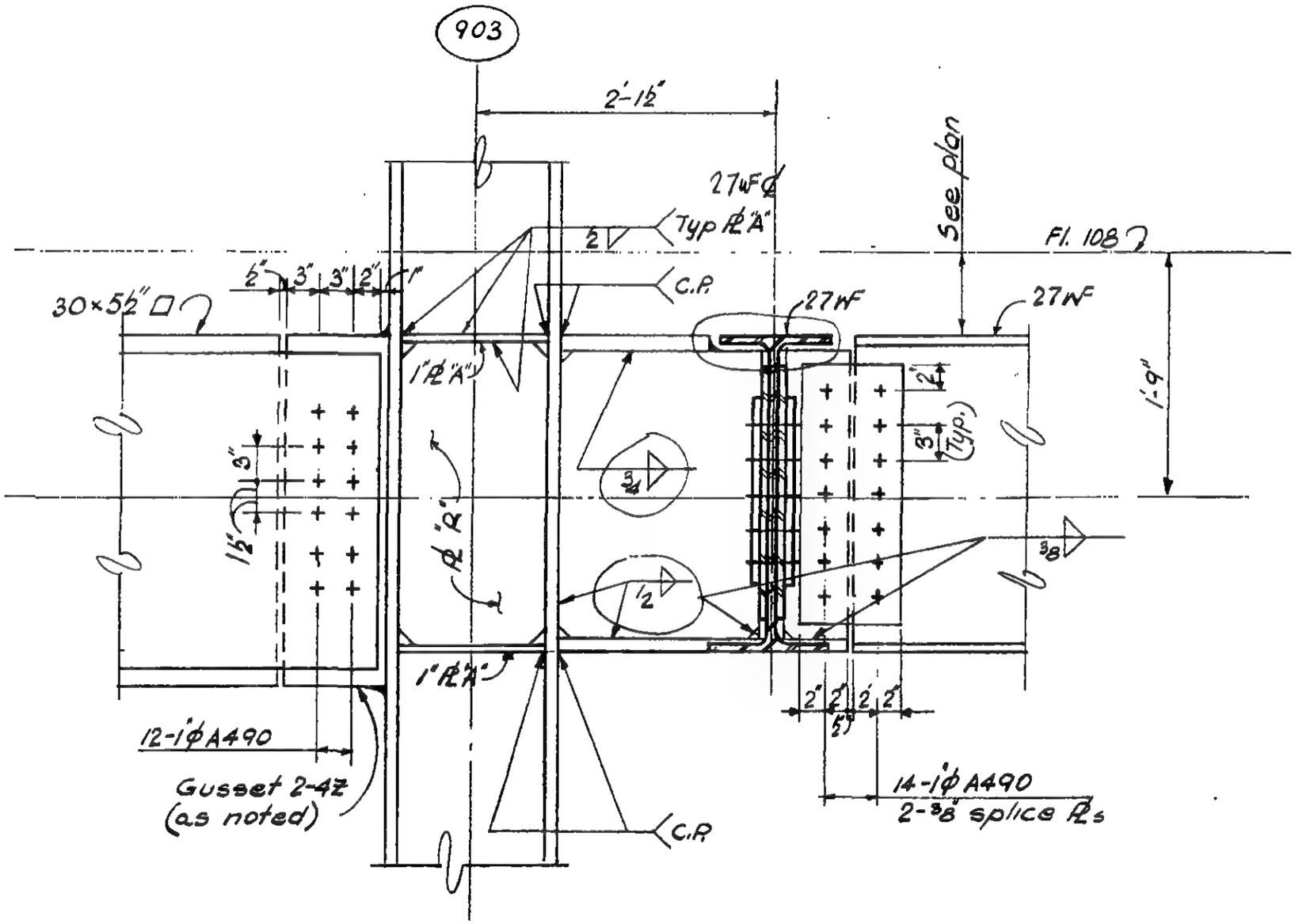

Section b-b

LICENSED PROFESSIONAL ENGINEER
LESLIE E. ROBERTSON
No. 34360
UNIVERSITY OF THE STATE OF NEW YORK

DESIGNED A. Vom

DRAWN D. Huggins

REVIEWED E. Drakos

9-AB15-11.2

SKILLING, HELLE, CHRISTIANSEN, ROBERTSON — Structural & Civil Engineers

PROJECT: THE WORLD TRADE CENTER | TITLE: FL 107-P.H. CONNECTION DETAILS - FL 108 | DATE: 5- -70

REVISIONS

5/27/70

(601) (608) (901) (908)

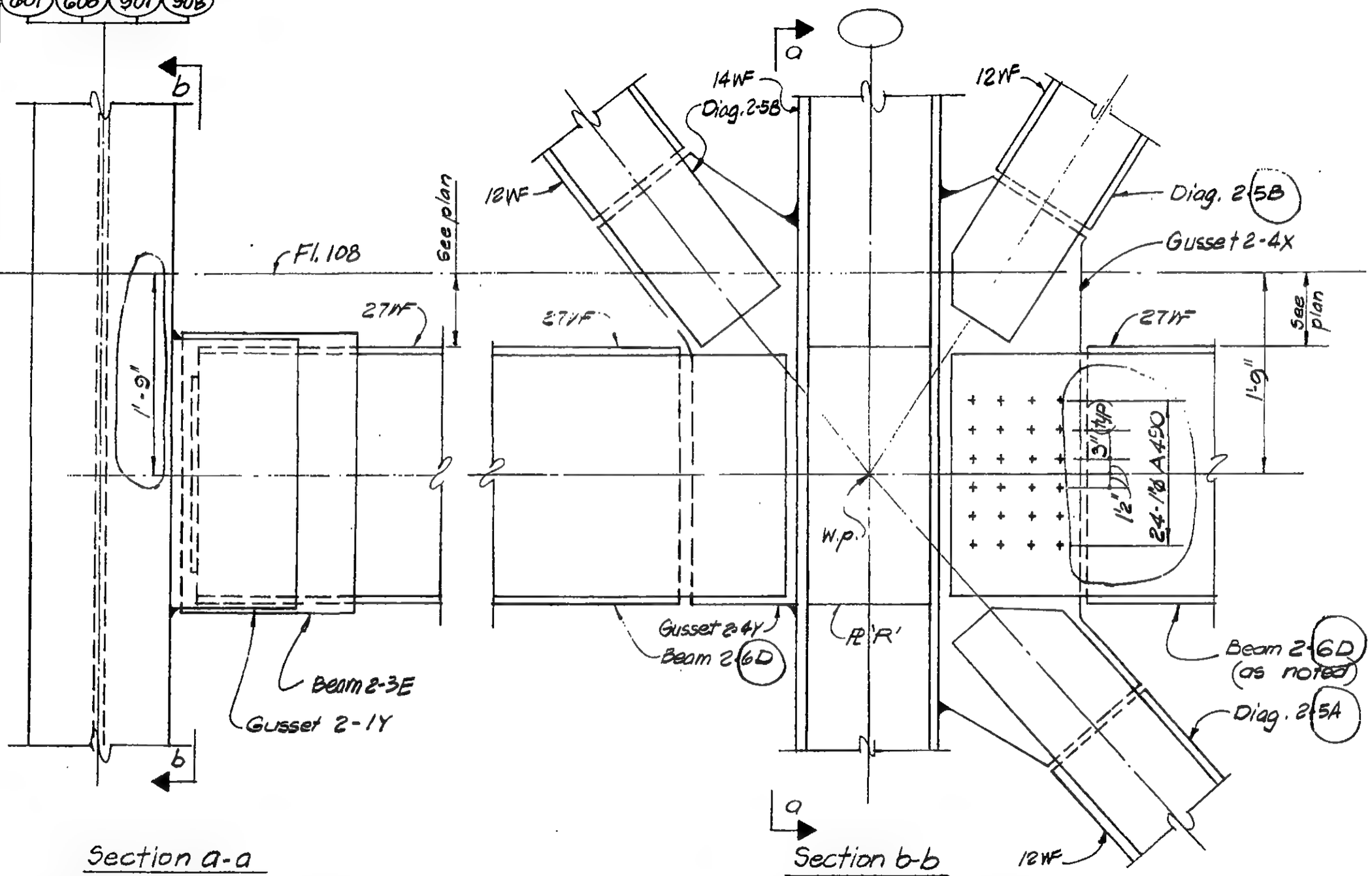

Section a-a

(Cols. 601 & 901 as shown)
(Cols 608 & 908 opp hand)

Section b-b

(Cols 601 & 608 as shown)
(Cols 901 & 1008 opp hand)

LICENSED PROFESSIONAL ENGINEER — LESLIE E ROBERTSON — No. 34869 — UNIVERSITY OF THE STATE OF NEW YORK

DESIGNED: K. HWANG
DRAWN: P.M. Ozek.
REVIEWED: E. Dracos

DETAIL 15-12

9-AB 15-12

SKILLING, HELLE, CHRISTIANSEN, ROBERTSON — Structural & Civil Engineers

PROJECT: THE WORLD TRADE CENTER | TITLE: Fl. 107-PH CONNECTION DETAIL - Fl 108 | DATE: 4-1-70

REVISIONS

5/27/70

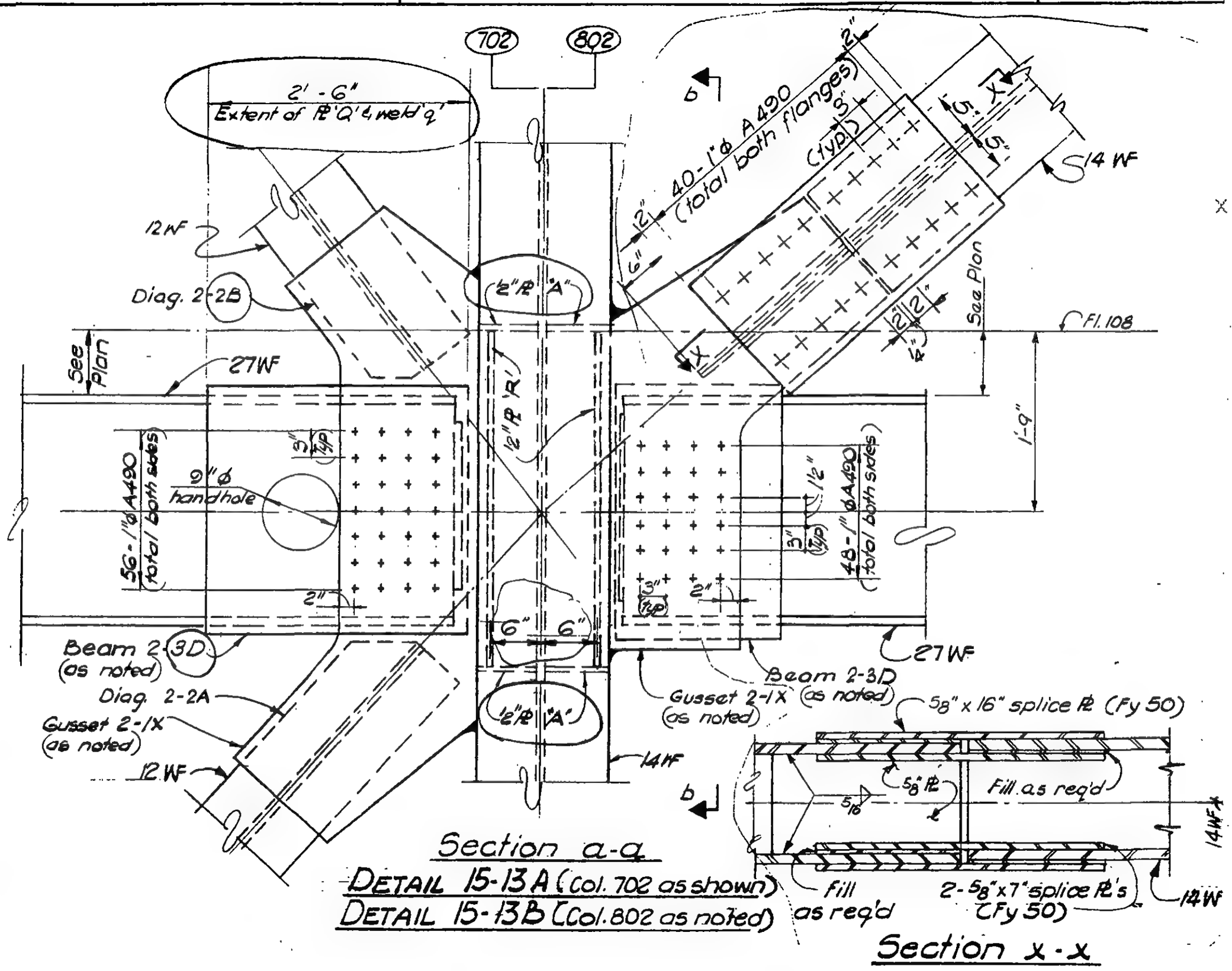

Section a-a

DETAIL 15-13A (Col. 702 as shown)

DETAIL 15-13B (Col. 802 as noted)

Section x-x

LICENSED PROFESSIONAL ENGINEER — LESLIE E. ROBERTSON — No. 34960 — UNIVERSITY OF THE STATE OF NEW YORK

DESIGNED: Kr Vm

DRAWN: D. Huggins

REVIEWED: E. Drakos

9-AB 15-13.1

SKILLING, HELLE, CHRISTIANSEN, ROBERTSON — Structural & Civil Engineers

PROJECT THE WORLD TRADE CENTER | TITLE FL.107–PH CONNECTION DETAILS- FL.108 | DATE 4-1-70

REVISIONS

5/27/70

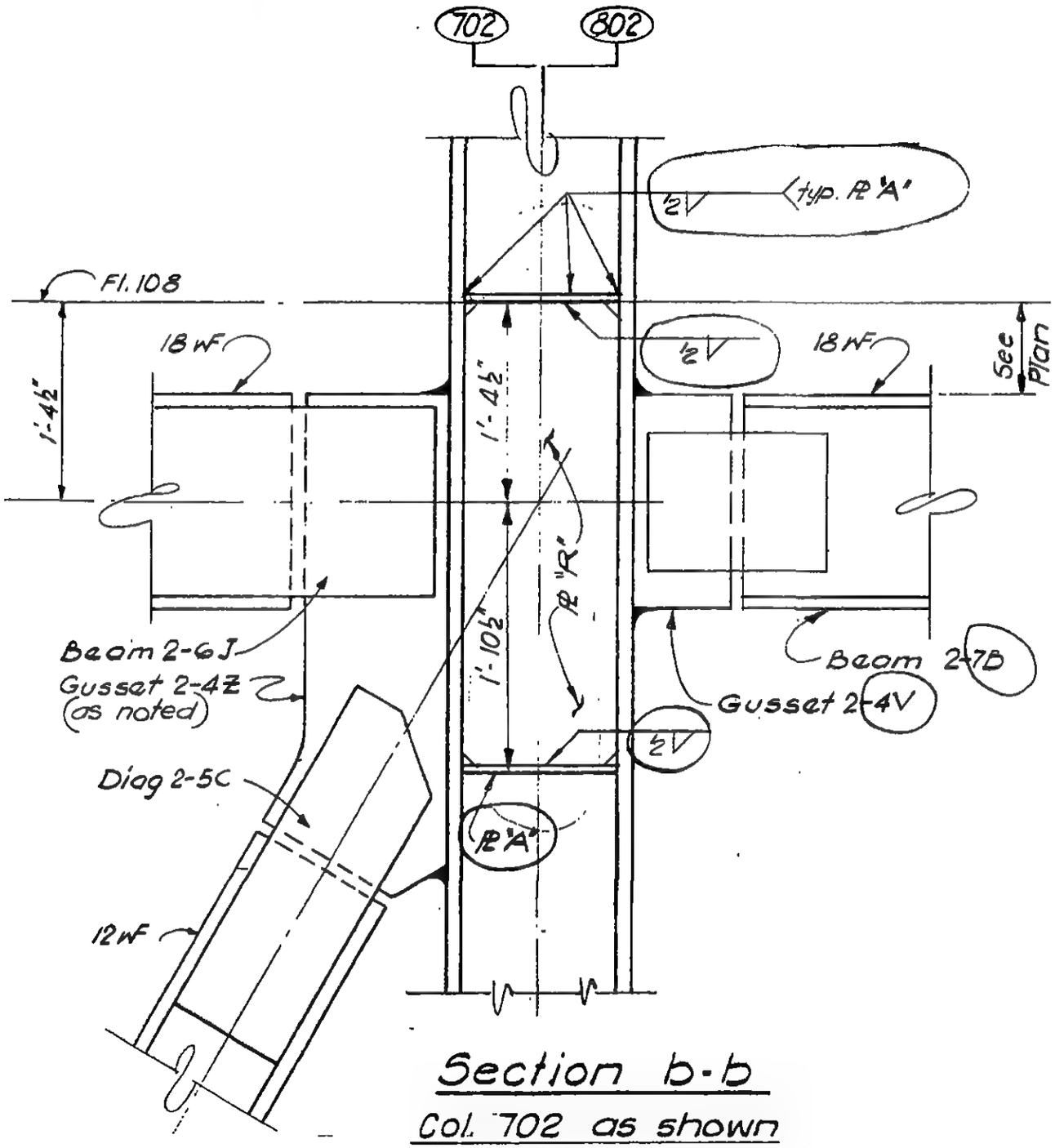

Section b-b

Col. 702 as shown

Col. 802 opp. hand

LICENSED PROFESSIONAL ENGINEER — LESLIE E. ROBERTSON — No 34360 — UNIVERSITY OF THE STATE OF NEW YORK

DESIGNED Hr Vm

DRAWN D. Huggins

REVIEWED E. Dracos

9-AB 15-13.2

SKILLING, HELLE, CHRISTIANSEN, ROBERTSON — Structural & Civil Engineers

PROJECT: THE WORLD TRADE CENTER | TITLE: FL. 107 - PH CONNECTION DETAILS - FL. 108 | DATE: 4 - 1 - 70

REVISIONS

5/27/70
7/8/70

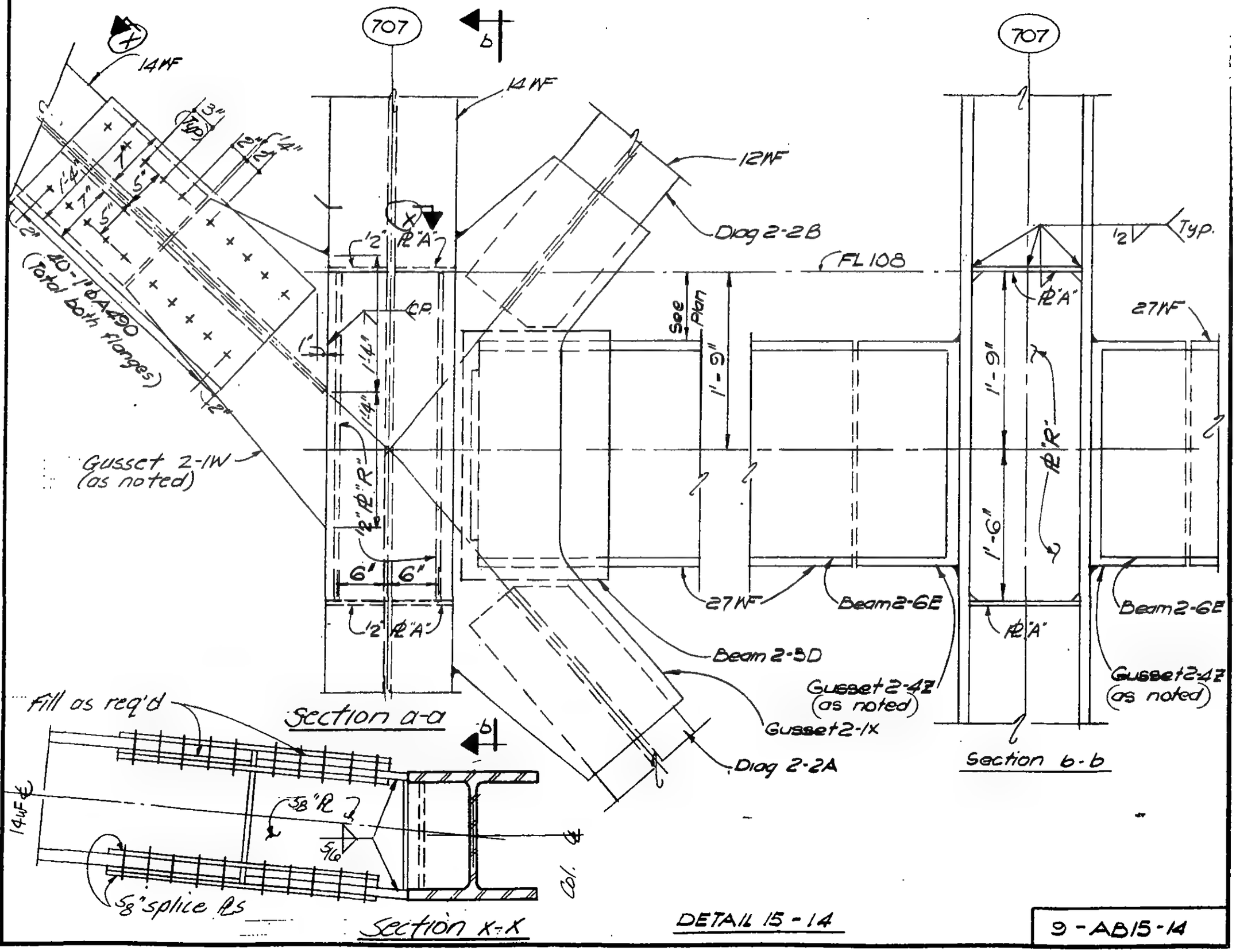

DETAIL 15 - 14

9 - AB15 - 14

LICENSED PROFESSIONAL ENGINEER — LESLIE E. ROBERTSON — No. 34360 — UNIVERSITY OF THE STATE OF NEW YORK

DESIGNED: H. Vom
DRAWN: W. Clarke
REVIEWED: E. Drakos

SKILLING, HELLE, CHRISTIANSEN, ROBERTSON — Structural & Civil Engineers

PROJECT: THE WORLD TRADE CENTER | TITLE: FL 107 - PH CONNECTION DETAILS - FL.108 | DATE: 4 - 1 - 70

REVISIONS

5/27/70
7/8/70

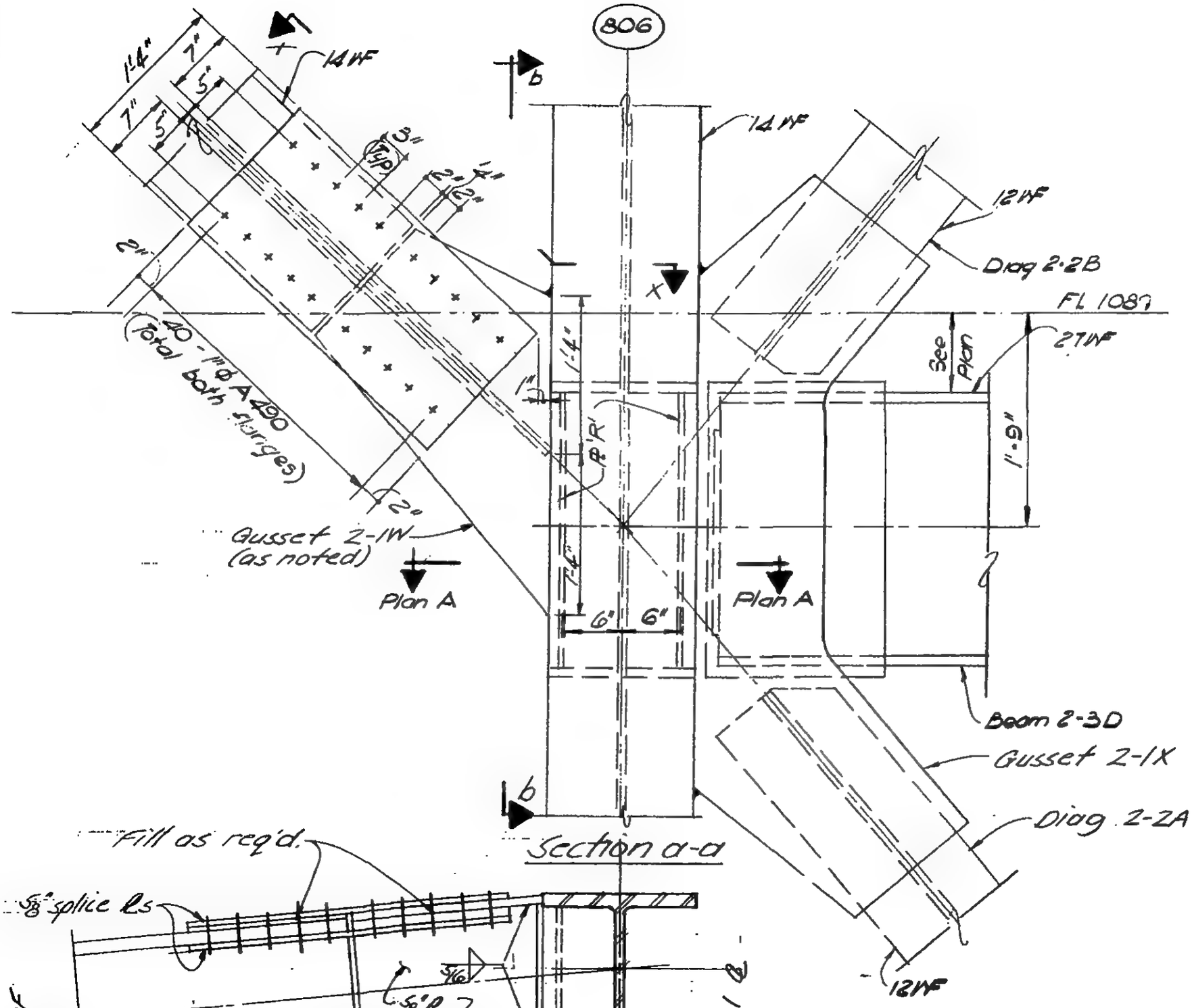

DETAIL 15-15

LICENSED PROFESSIONAL ENGINEER — LESLIE E. ROBERTSON — No. 34860 — UNIVERSITY OF THE STATE OF NEW YORK

DESIGNED
DRAWN W. Clarke
REVIEWED E. Dracos

9 - AB15 - 15.1

SKILLING, HELLE, CHRISTIANSEN, ROBERTSON — Structural & Civil Engineers

PROJECT: THE WORLD TRADE CENTER | TITLE: FL 107 - PH CONNECTION DETAILS - FL 108 | DATE: 4-1-70

REVISIONS
5/27/70
7-15-70

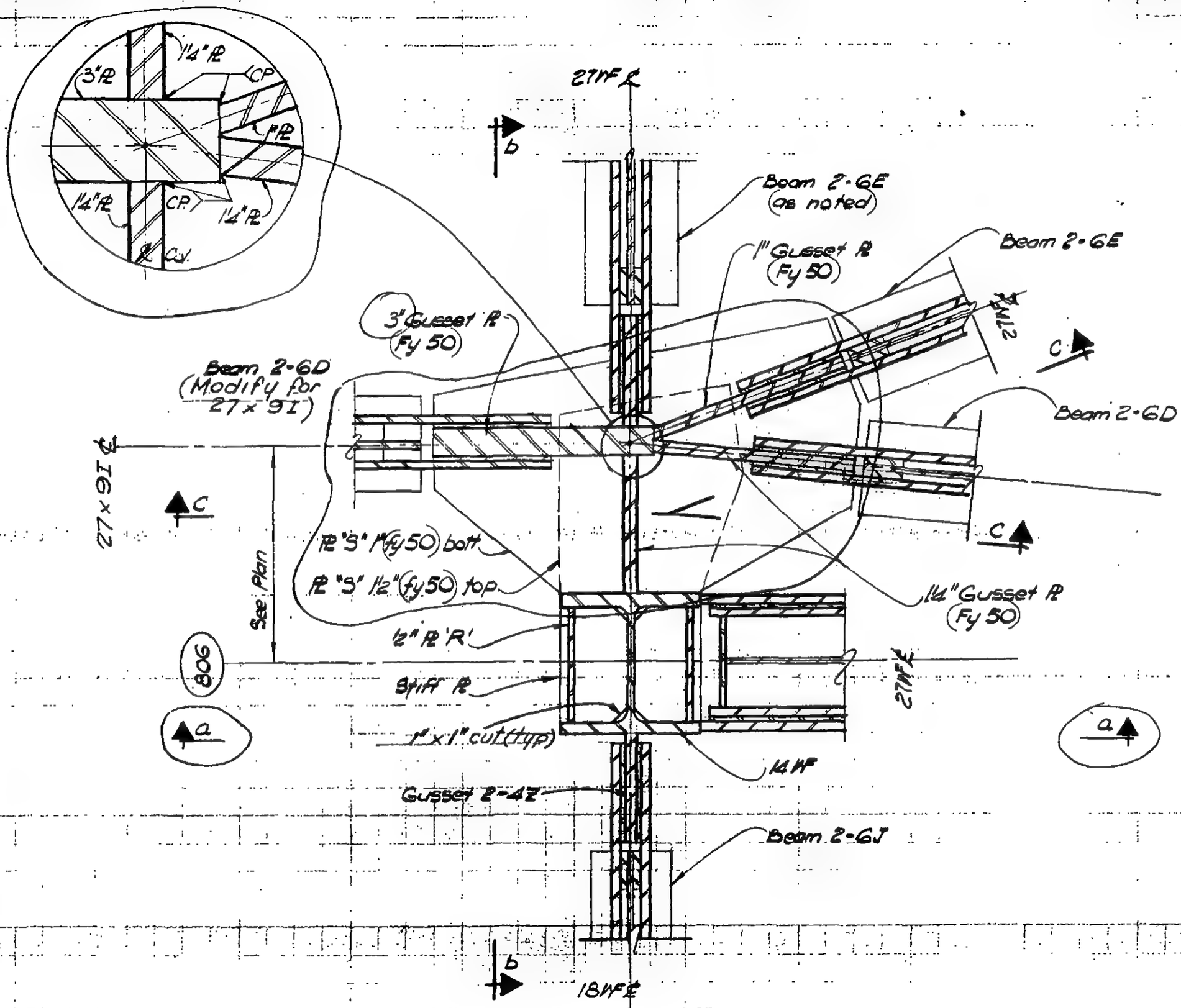

PLAN A-A

LICENSED PROFESSIONAL ENGINEER — LESLIE E. ROBERTSON — No. 34860 — UNIVERSITY OF THE STATE OF NEW YORK

SIGNED: Mr Von
DRAWN: W. Clarke
REVIEWED: E. Drakos

9-AB15-15.2

SKILLING, HELLE, CHRISTIANSEN, ROBERTSON — Structural & Civil Engineers

PROJECT: THE WORLD TRADE CENTER | TITLE: FL 107 - PH CONNECTION DETAILS - FL 108 | DATE: 4-1-70

REVISIONS

5/27/70

7-15-70

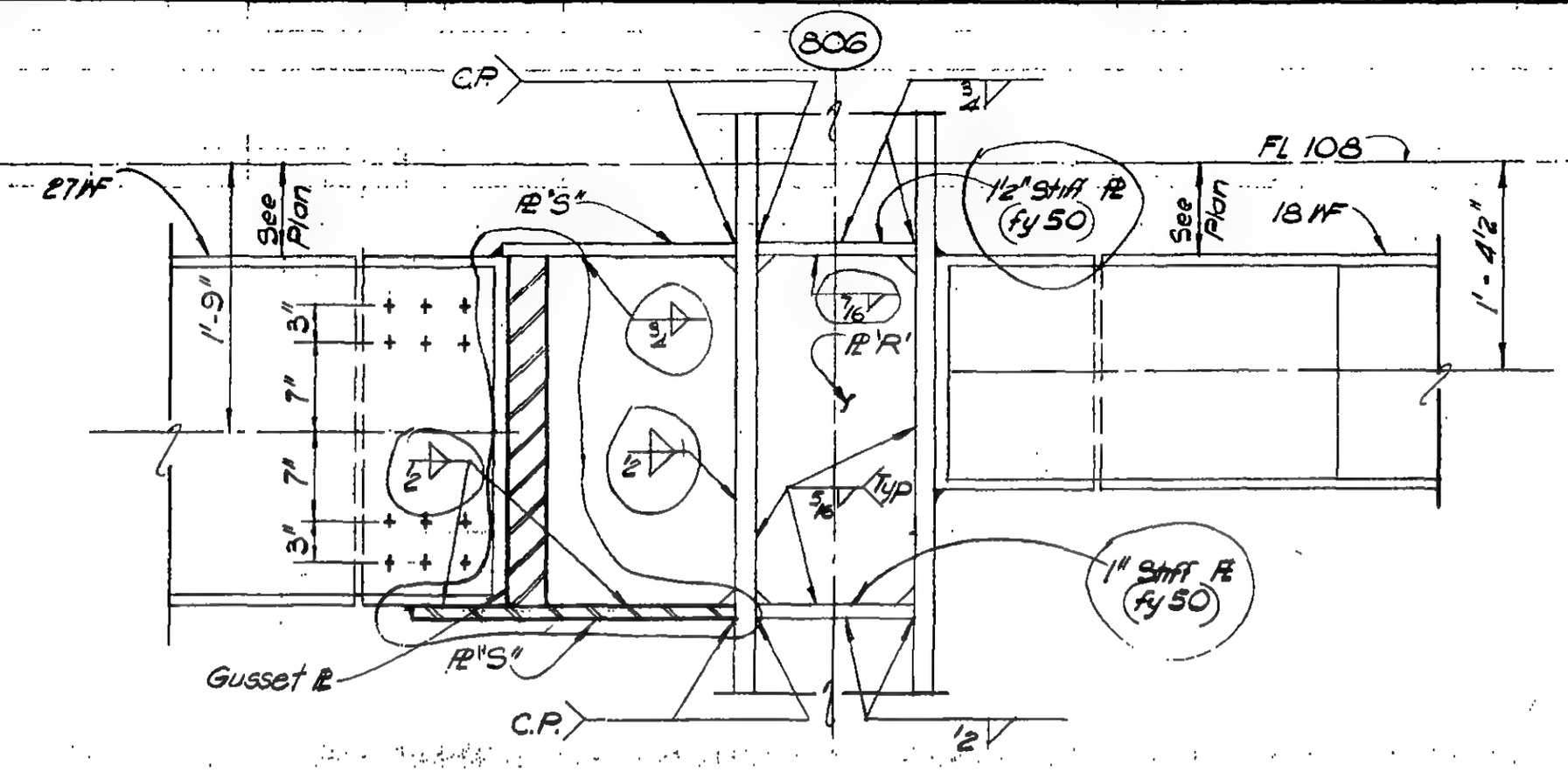

Section b-b

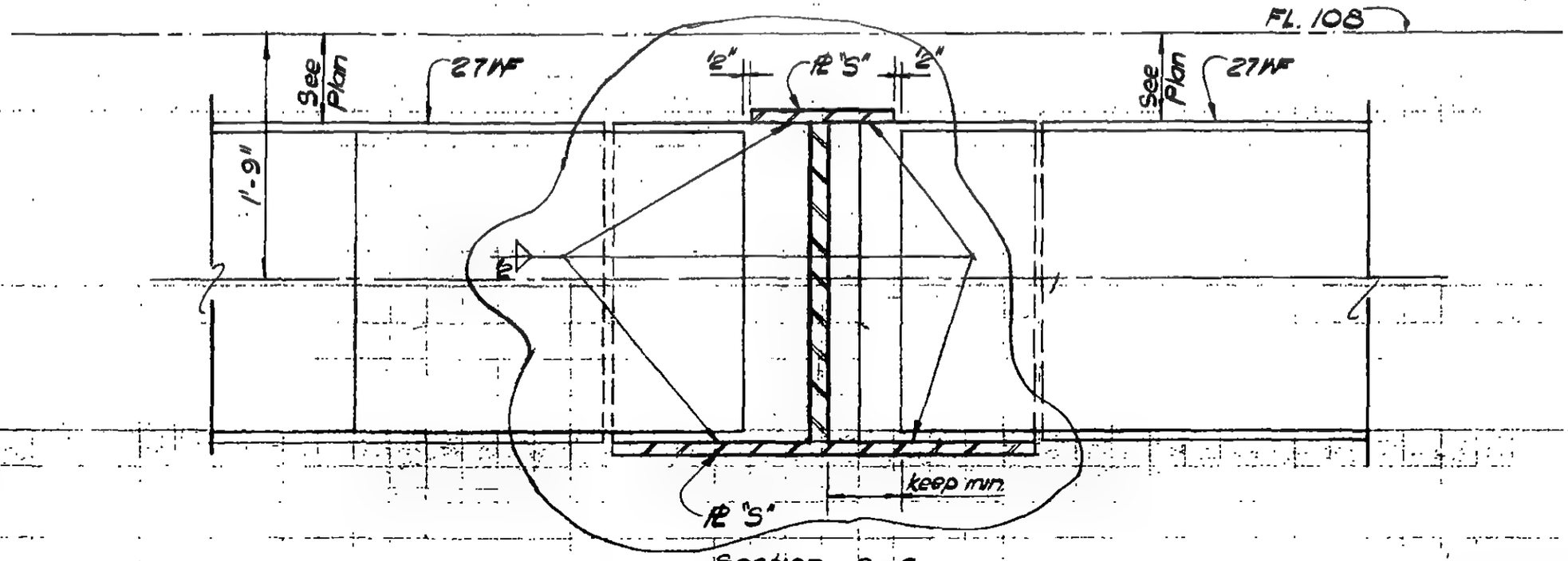

Section c-c

LICENSED PROFESSIONAL ENGINEER — LESLIE E. ROBERTSON — No. 34360 — UNIVERSITY OF THE STATE OF NEW YORK

DESIGNED A. Vm

DRAWN W. Clarke

REVIEWED E. Drakos

D-AB15-15.3

SKILLING, HELLE, CHRISTIANSEN, ROBERTSON — Structural & Civil Engineers

PROJECT: THE WORLD TRADE CENTER | TITLE: FL.107-PH CONNECTION DETAILS - FL.108 | DATE: 4-1-70

REVISIONS

5/27/70

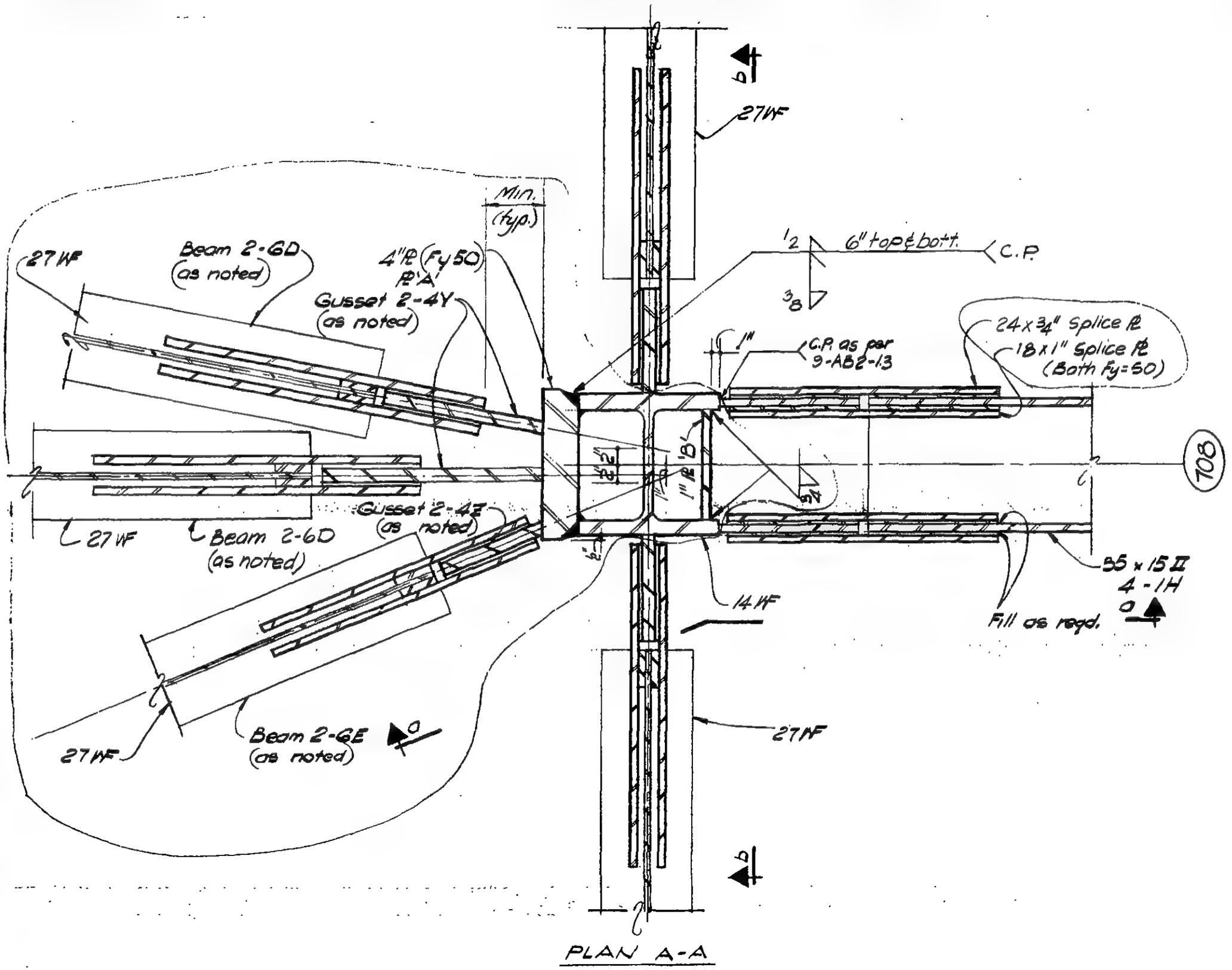

PLAN A-A

DETAIL 15-16

9-AB15-16.1

LICENSED PROFESSIONAL ENGINEER LESLIE E. ROBERTSON No. 34360 UNIVERSITY OF THE STATE OF NEW YORK

DESIGNED: [illegible]

DRAWN: W. Clarke

REVIEWED: E. Dravos

SKILLING, HELLE, CHRISTIANSEN, ROBERTSON — Structural & Civil Engineers

PROJECT: THE WORLD TRADE CENTER | TITLE: FL 107 - PH CONNECTION DETAILS - FL 108 | DATE: 4-1-70

REVISIONS

5/27/70

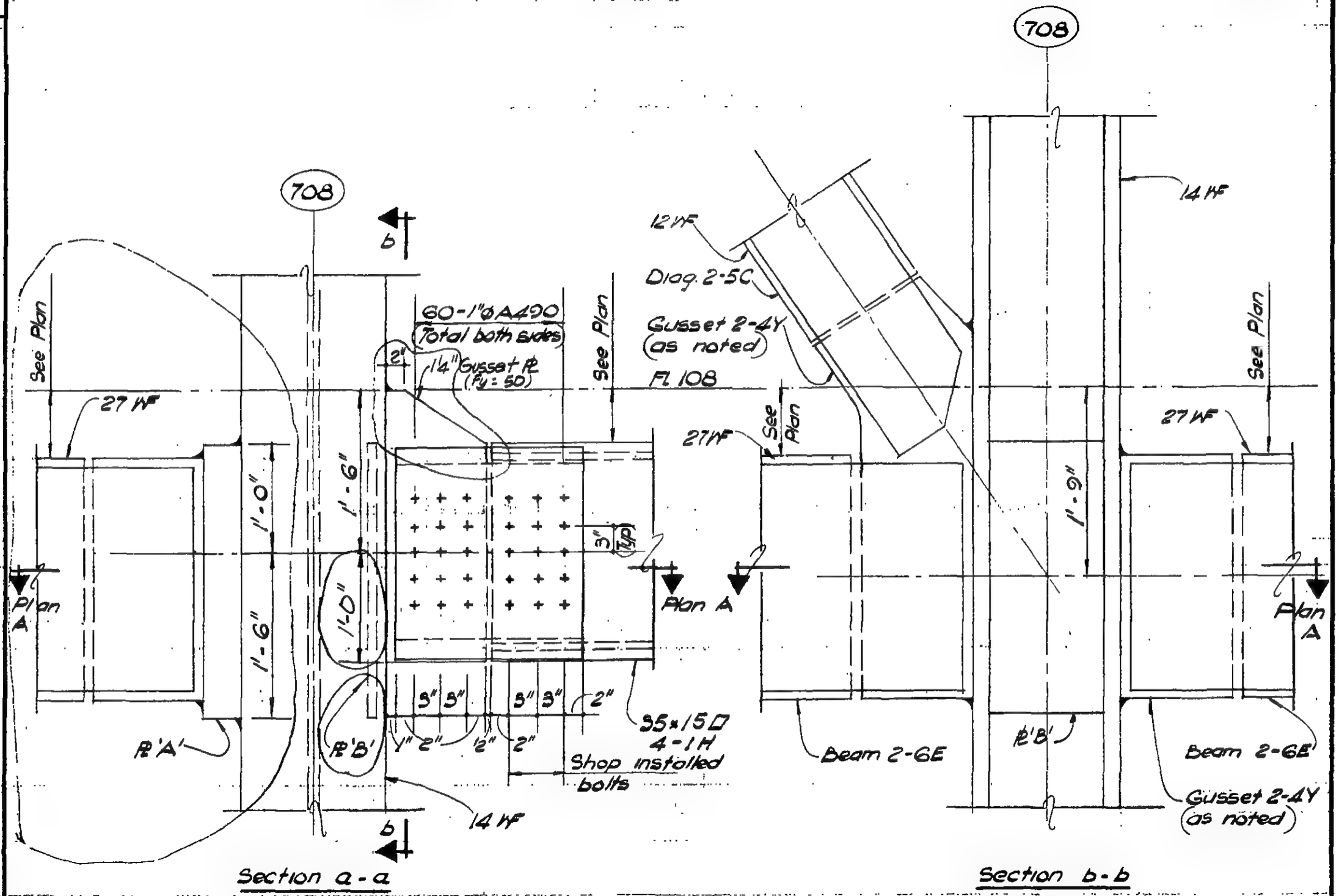

LICENSED PROFESSIONAL ENGINEER
LESLIE E. ROBERTSON
No. 34360
UNIVERSITY OF THE STATE OF NEW YORK

DESIGNED

DRAWN W. Clarke

REVIEWED E. Dracos

9-AB15-16.2

SKILLING, HELLE, CHRISTIANSEN, ROBERTSON — Structural & Civil Engineers

PROJECT: THE WORLD TRADE CENTER | TITLE: FL 107 - PH CONNECTION DETAILS - FL. 108 | DATE: 4-1-70

REVISIONS

5/27/70

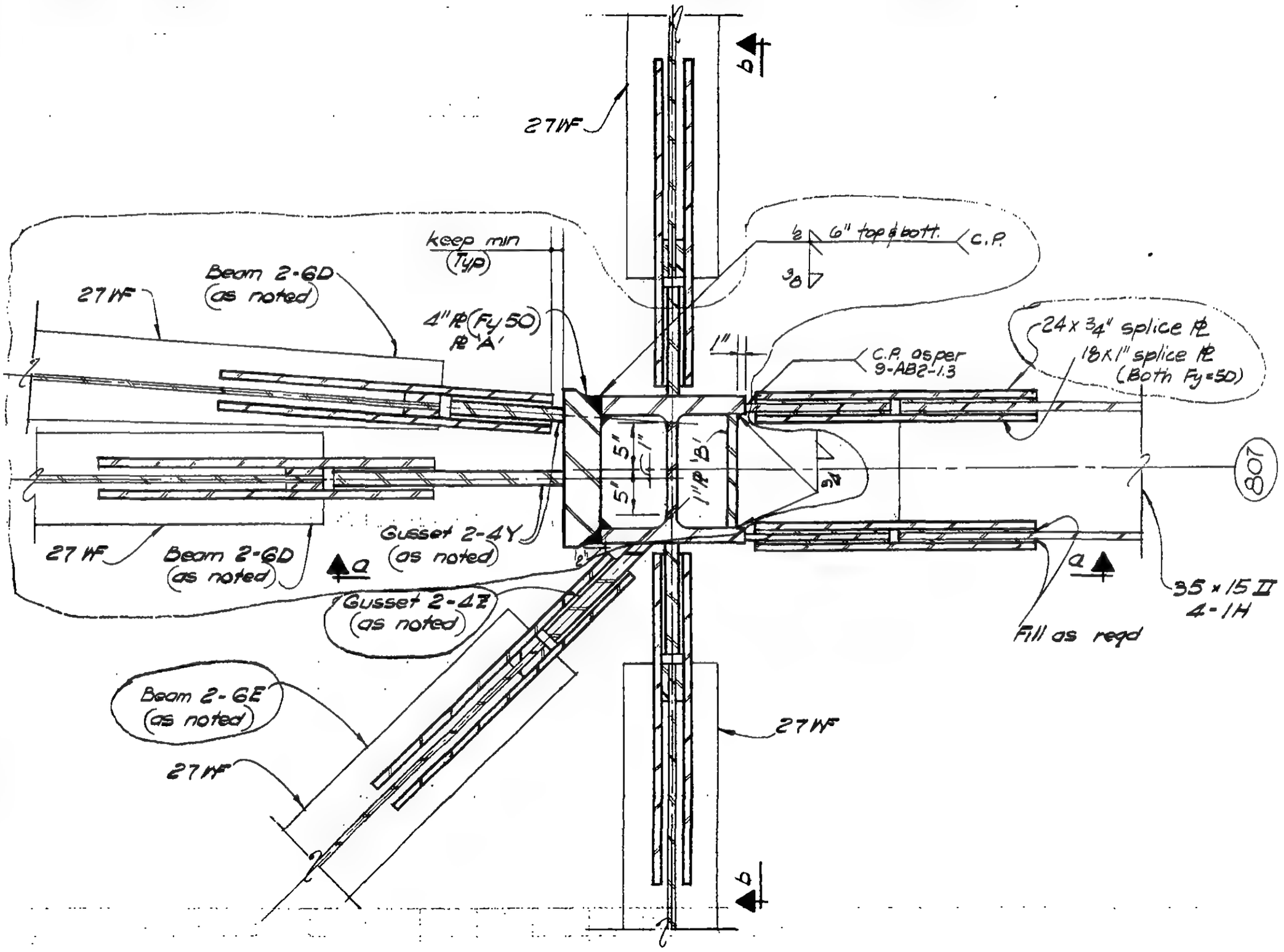

PLAN A-A

DETAIL 15-17

LICENSED PROFESSIONAL ENGINEER — LESLIE E. ROBERTSON — No 34360 — UNIVERSITY OF THE STATE OF NEW YORK

DESIGNED: J. Born

DRAWN: W. Clarke

REVIEWED: E. Dranos

9-AB15-17.1

SKILLING, HELLE, CHRISTIANSEN, ROBERTSON — Structural & Civil Engineers

PROJECT: THE WORLD TRADE CENTER | TITLE: FL 107 - PH CONNECTION DETAILS - FL. 108 | DATE: 5-27-70

REVISIONS

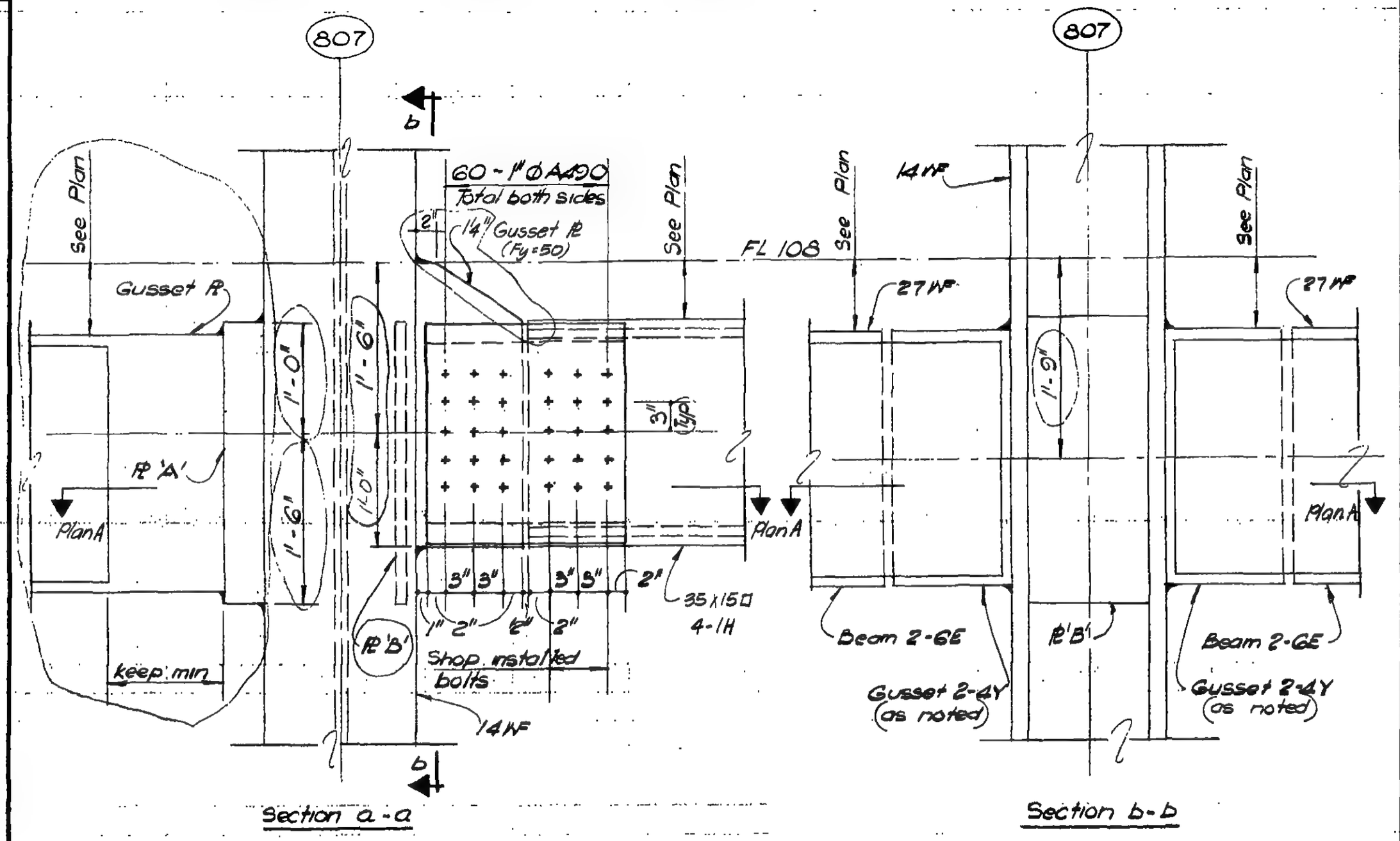

Section a-a

Section b-b

LICENSED PROFESSIONAL ENGINEER
LESLIE E. ROBERTSON
No. 34360
UNIVERSITY OF THE STATE OF NEW YORK

DESIGNED: bon

DRAWN: W. Clarke

REVIEWED: E. Drakos

9-AB15-17.2

SKILLING, HELLE, CHRISTIANSEN, ROBERTSON — Structural & Civil Engineers

PROJECT: THE WORLD TRADE CENTER | TITLE: FL 107 - PH CONNECTION DETAILS - FL.108 | DATE: 4-1-70

REVISIONS

5/27/70
7/8/70

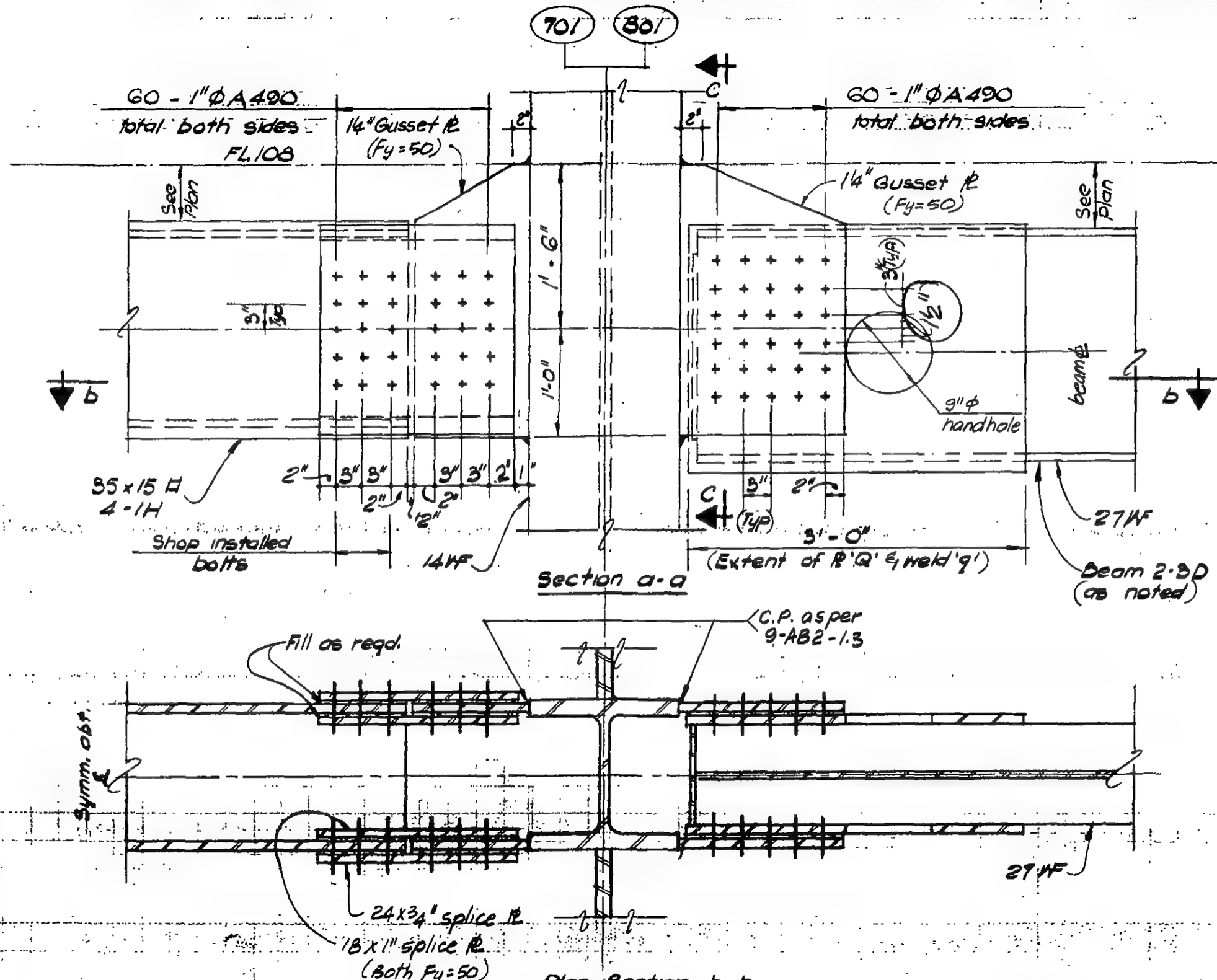

DETAIL 15-18A }
DETAIL 15-18B } as noted

LICENSED PROFESSIONAL ENGINEER — LESLIE E. ROBERTSON — No. 34860 — UNIVERSITY OF THE STATE OF NEW YORK

DESIGNED A. Vem
DRAWN M. Clarke
REVIEWED E. Drakos

9-AB15-18.1

SKILLING, HELLE, CHRISTIANSEN, ROBERTSON — Structural & Civil Engineers

PROJECT: THE WORLD TRADE CENTER | TITLE: FL 107 - PH CONNECTION DETAILS - FL. 108 | DATE: 9-1-70

REVISIONS

5/27/70

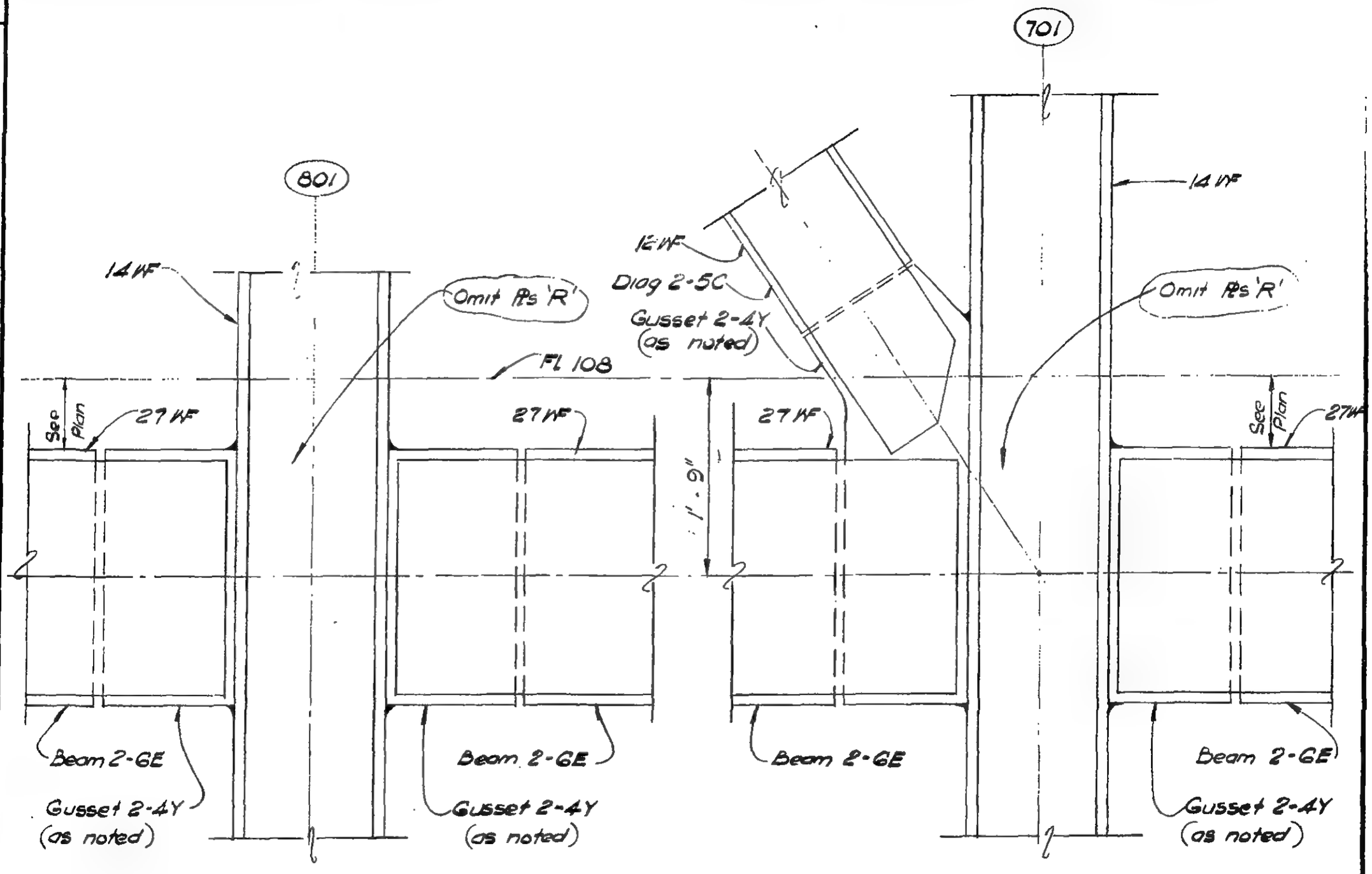

DETAIL 15-18B

DETAIL 15-18A

Section C-C

LICENSED PROFESSIONAL ENGINEER — LESLIE E. ROBERTSON — No. 34360 — UNIVERSITY OF THE STATE OF NEW YORK

DESIGNED: H. Voth

DRAWN: W. Clarke

REVIEWED: E. Dracos

9-AB15-18.2

SKILLING, HELLE, CHRISTIANSEN, ROBERTSON — Structural & Civil Engineers

PROJECT THE WORLD TRADE CENTER | TITLE FL 107 - PH CONNECTION DETAILS - FL 110 | DATE 4-1-70

REVISIONS

6/18/70
12/14/70

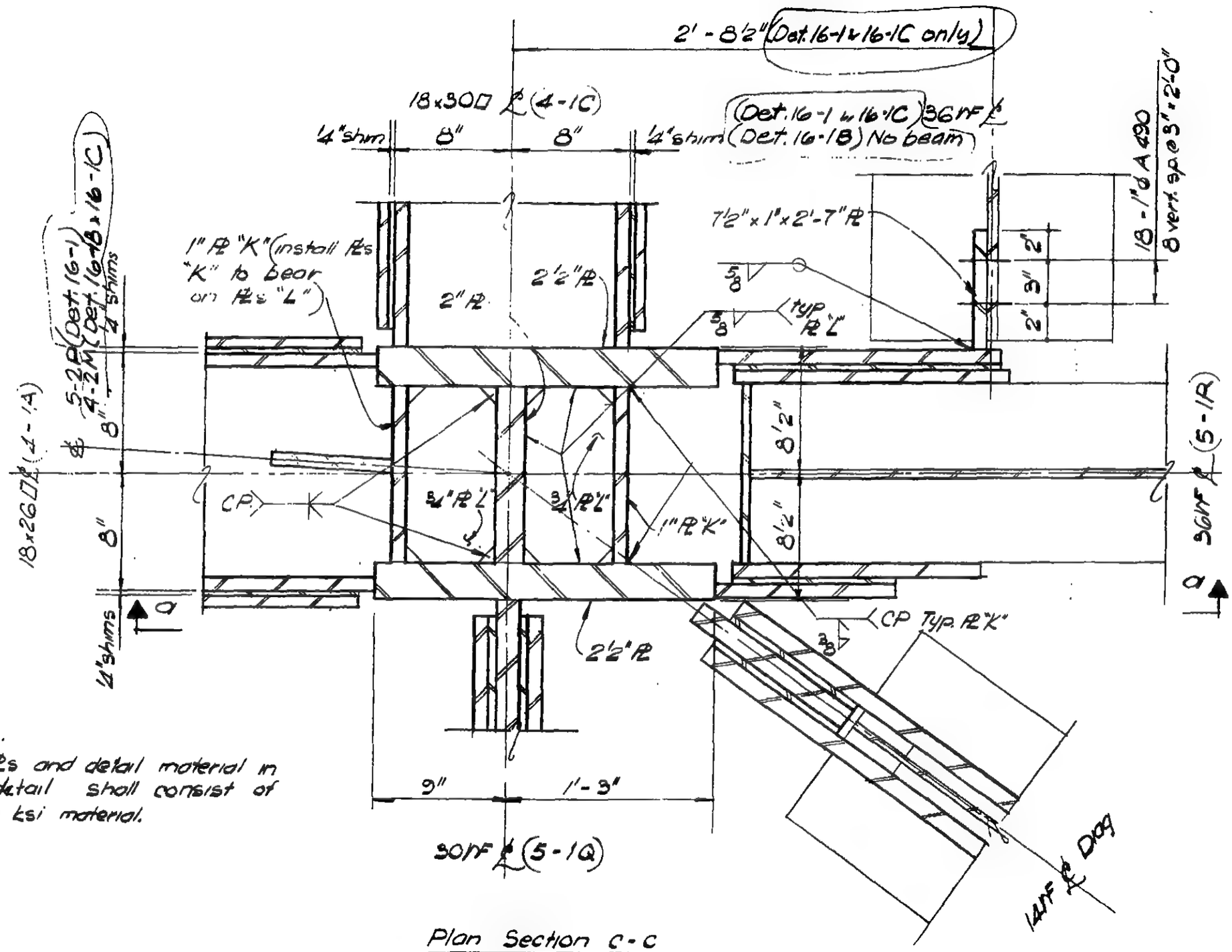

Notes:

1. All R's and detail material in this detail shall consist of fy = 50 ksi material.

Plan Section C-C

DETAIL 16-1 Col. 501 as shown, Cols 508, 1001 & 1008 similar (Tower A)

DETAIL 16-1B Col. 501 as shown, col. 1008 similar - Tower B

DETAIL 16-1C Col. 508 & 1001 similar - Tower B

LICENSED PROFESSIONAL ENGINEER — LESLIE E. ROBERTSON — No. 34360 — UNIVERSITY OF THE STATE OF NEW YORK

DESIGNED

DRAWN W. Clarke

REVIEWED E. Drakos

9-AB16-1.1

SKILLING, HELLE, CHRISTIANSEN, ROBERTSON — Structural & Civil Engineers

PROJECT: THE WORLD TRADE CENTER | TITLE: FLOOR 107-RH CONNECTION DETAIL - FL 110 | DATE: 4-1-70

REVISIONS

6/18/70

12/14/70

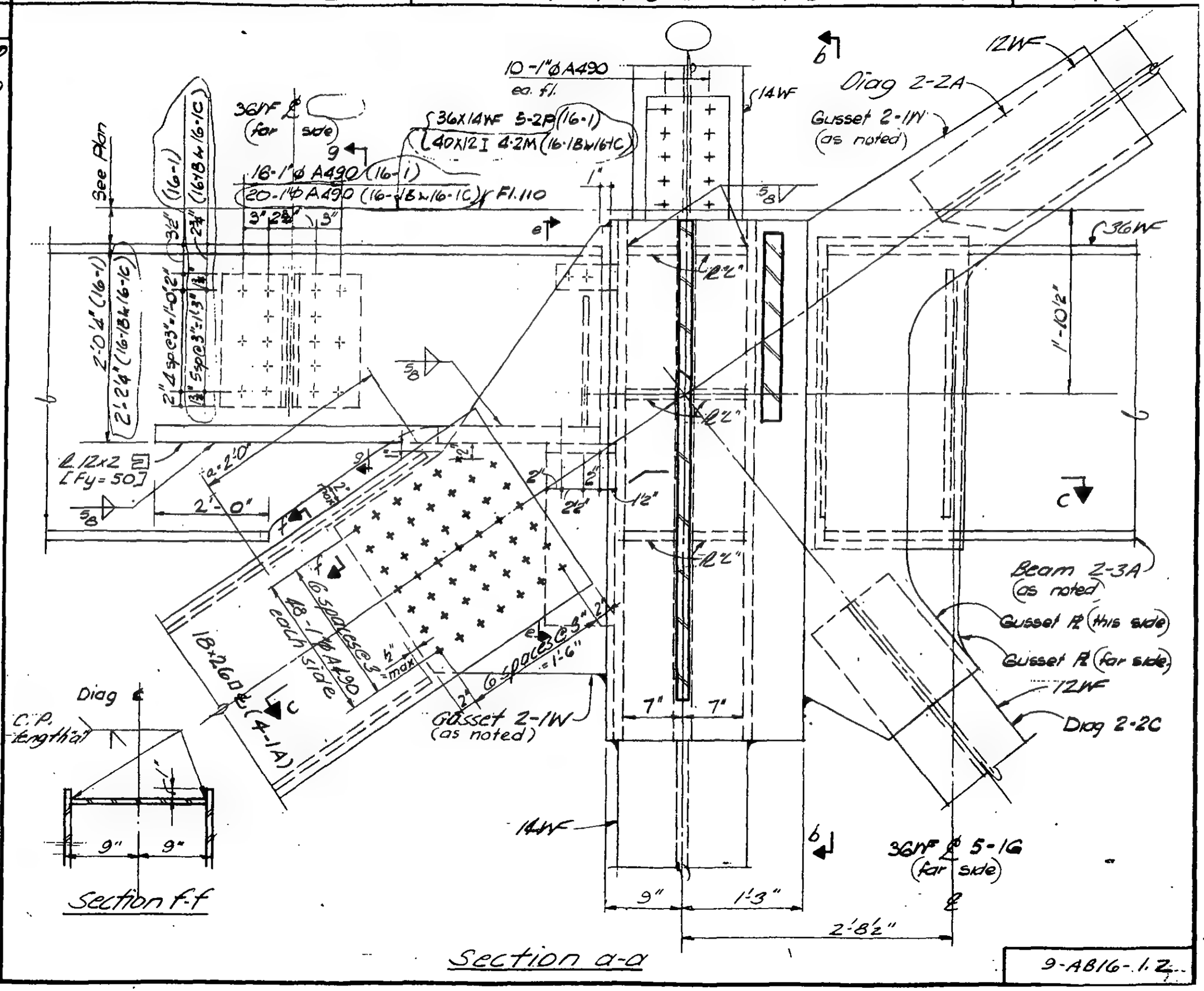

LICENSED PROFESSIONAL ENGINEER — LESLIE E. ROBERTSON — No. 044960 — UNIVERSITY OF THE STATE OF NEW YORK

DESIGNED

DRAWN J. Williams

REVIEWED E. Drakos

9-AB16-1.12

SKILLING, HELLE, CHRISTIANSEN, ROBERTSON — Structural & Civil Engineers

PROJECT: THE WORLD TRADE CENTER — TITLE: FLOOR 107-PH CONNECTION DETAILS-FC110 — DATE: 4-1-70

REVISIONS: 6/15/70

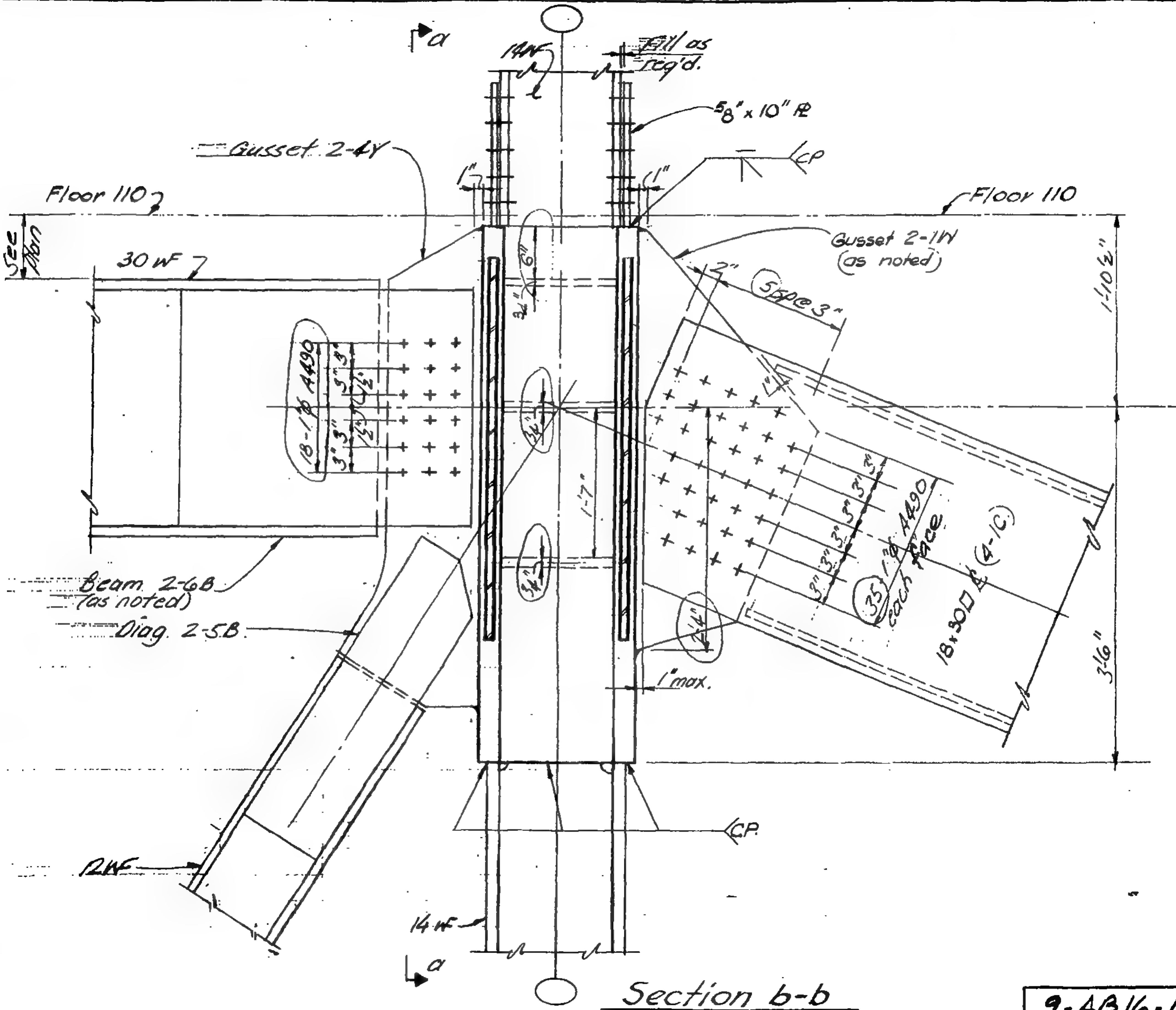

Section b-b

LICENSED PROFESSIONAL ENGINEER LESLIE E. ROBERTSON No. 34860 UNIVERSITY OF THE STATE OF NEW YORK

DESIGNED

DRAWN: J. Grielus

REVIEWED: E. Drakos

9-AB16-1.3

SKILLING, HELLE, CHRISTIANSEN; ROBERTSON — Structural & Civil Engineers

PROJECT THE WORLD TRADE CENTER | TITLE FL 107 - PH CONNECTION DETAILS - FL 110 | DATE 4-1-70

REVISIONS

6/18/70

12/14/70

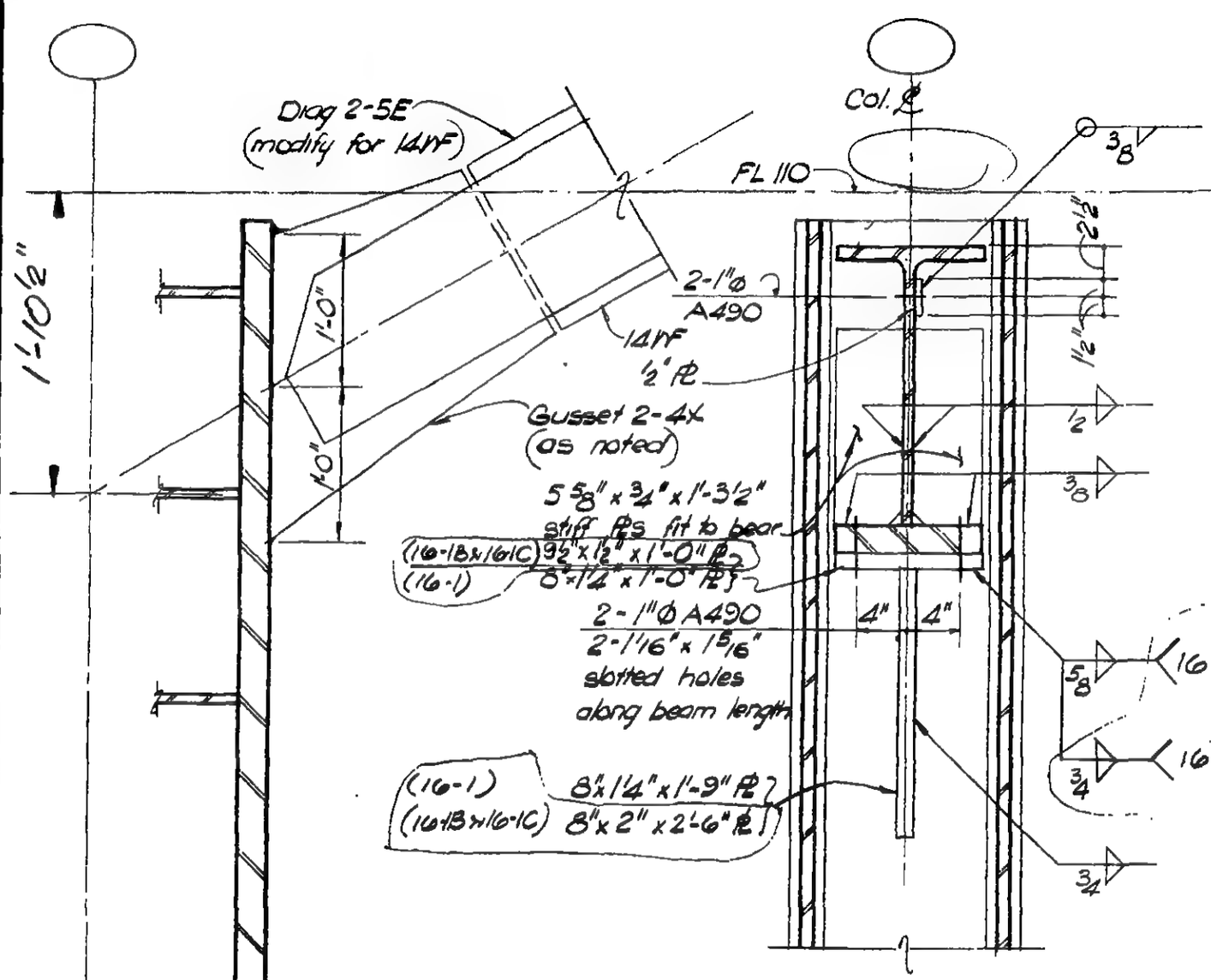

Section d-d

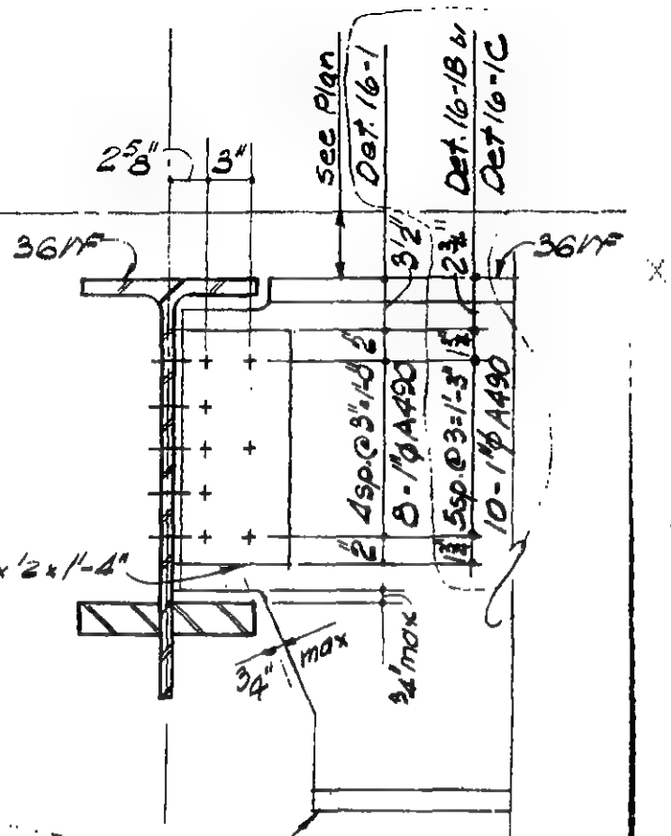

Section e-e

Section g-g

LICENSED PROFESSIONAL ENGINEER
LESLIE E. ROBERTSON
No 34360
UNIVERSITY OF THE STATE OF NEW YORK

DESIGNED

DRAWN
W. Clarke

REVIEWED
E. Drakos

9-AB16-1.4

SKILLING, HELLE, CHRISTIANSEN, ROBERTSON — Structural & Civil Engineers

PROJECT THE WORLD TRADE CENTER | TITLE FL 107-PH, CONNECTION DETAILS - FL 110 | DATE 4-1-70

REVISIONS

6/15/70

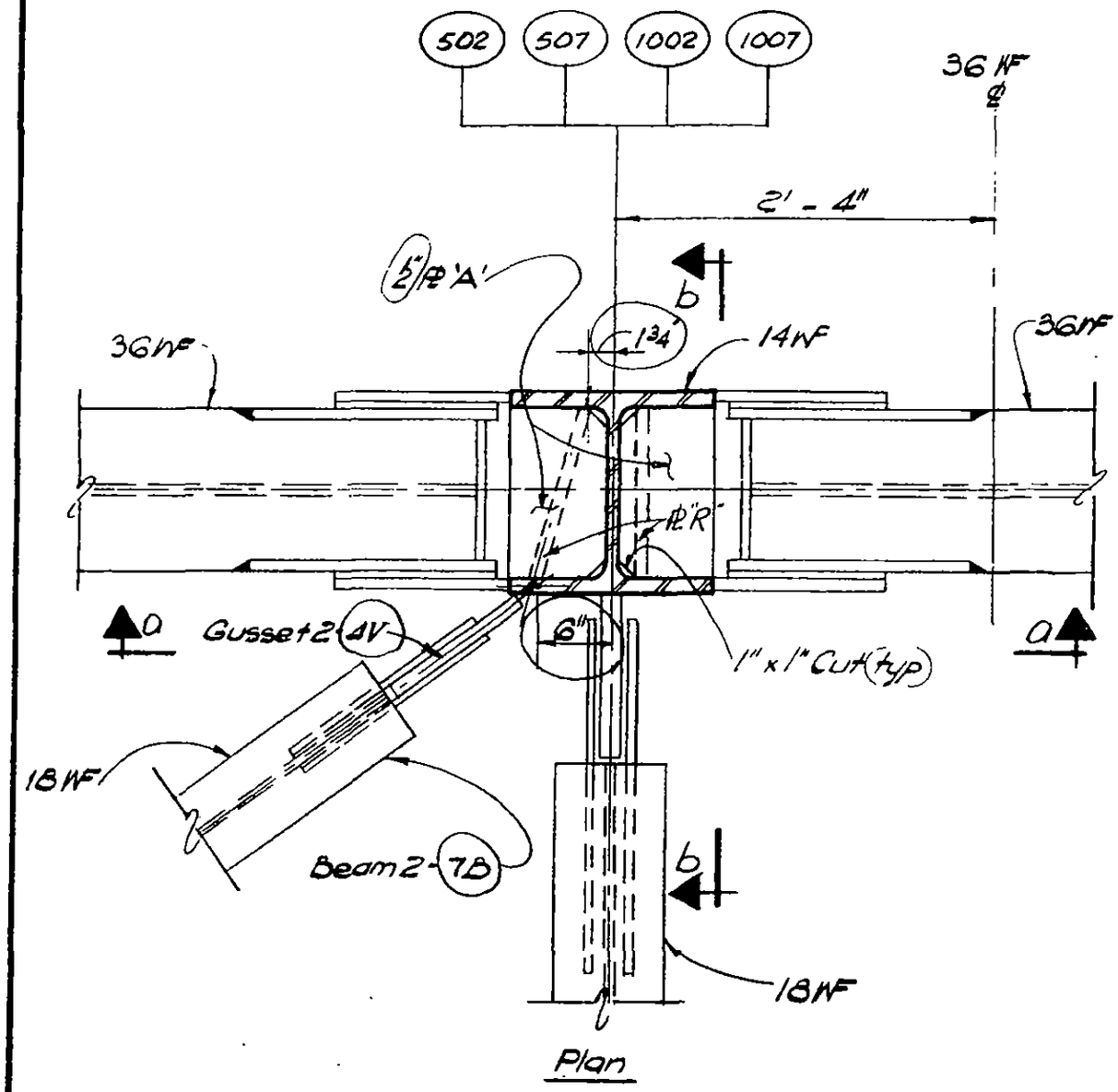

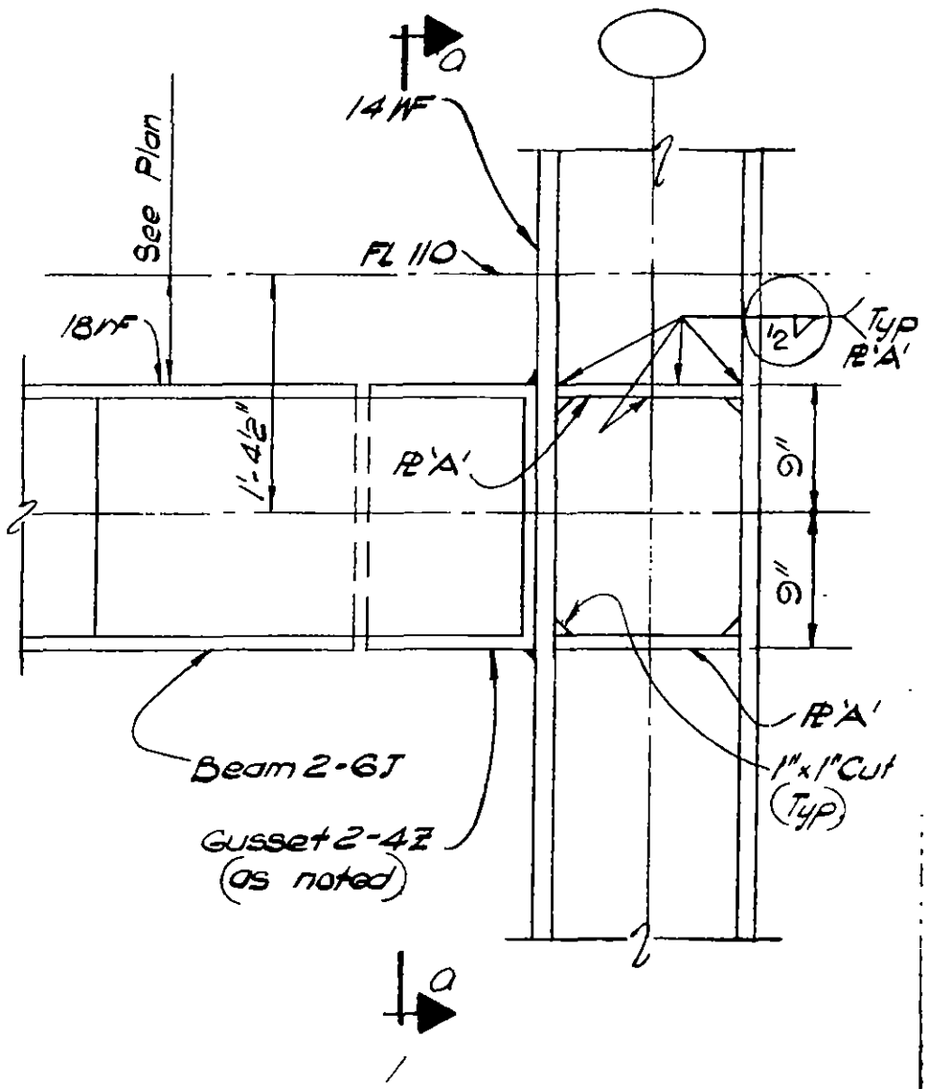

Section b-b

DETAIL 16-2 { Col 502 as shown / Cols 507, 1002 & 1007 similar }

LICENSED PROFESSIONAL ENGINEER — LESLIE E. ROBERTSON — No 34360 — UNIVERSITY OF THE STATE OF NEW YORK

DESIGNED K. HWANG

DRAWN N. Clarke

REVIEWED E. Dracos

9-AB 16-2.1

SKILLING, HELLE, CHRISTIANSEN, ROBERTSON — Structural & Civil Engineers

PROJECT: THE WORLD TRADE CENTER | TITLE: FL. 107 PH. CONNECTION DETAILS – FL. 110 | DATE: 4 - 1 - 70

REVISIONS

6 - 15 - 70

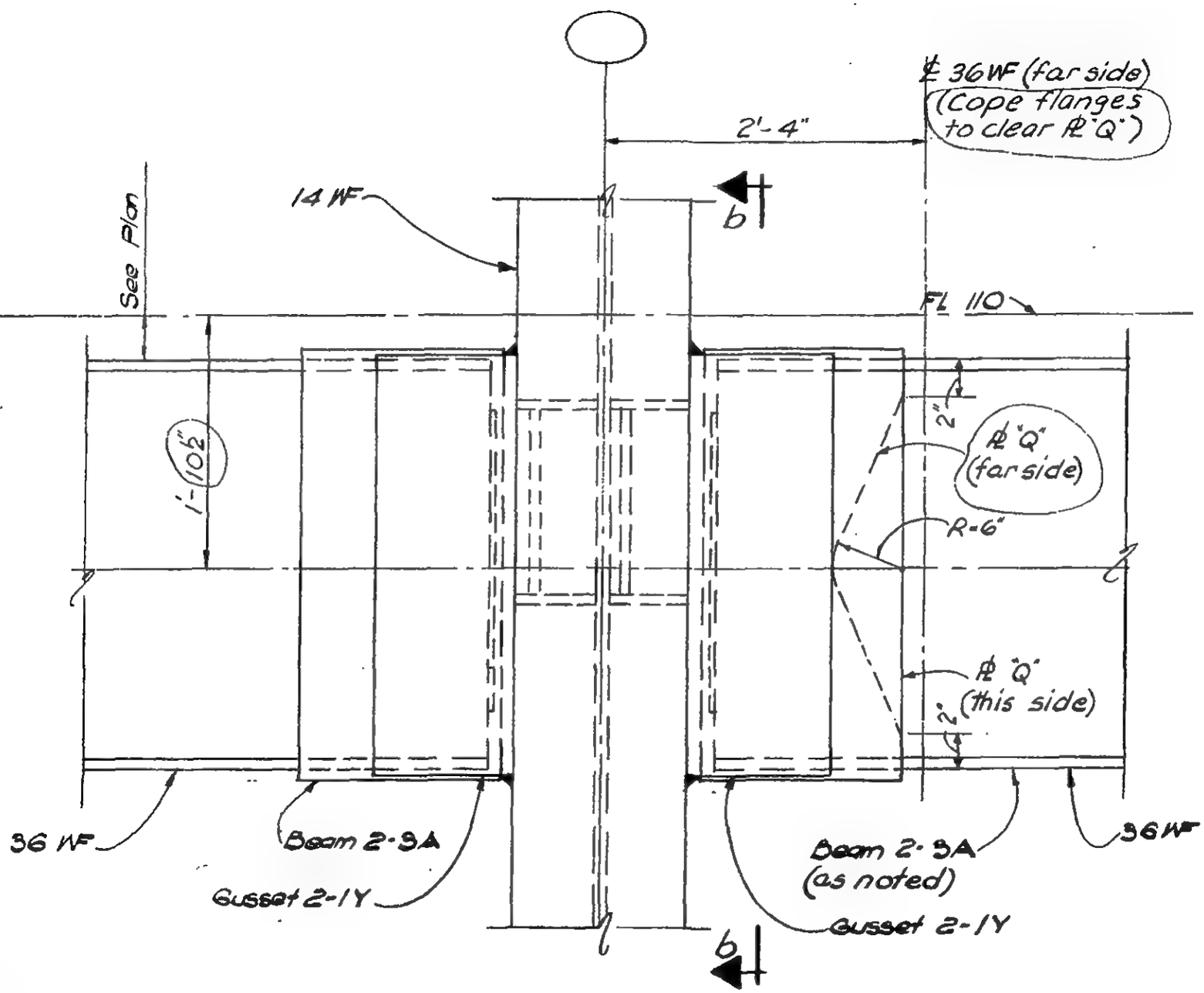

Section a-a

LICENSED PROFESSIONAL ENGINEER — LESLIE E. ROBERTSON — No. 34360 — UNIVERSITY OF THE STATE OF NEW YORK

DESIGNED: K. HWANG
DRAWN: W. Clarke
REVIEWED: E. Drakos

9-AB16-2.2

SKILLING, HELLE, CHRISTIANSEN, ROBERTSON — Structural & Civil Engineers

PROJECT: ~~THE WORLD TRADE CENTER~~ | TITLE: AL 107-PH CONNECTION DETAILS - FL 110 | DATE: X2-14-70

REVISIONS

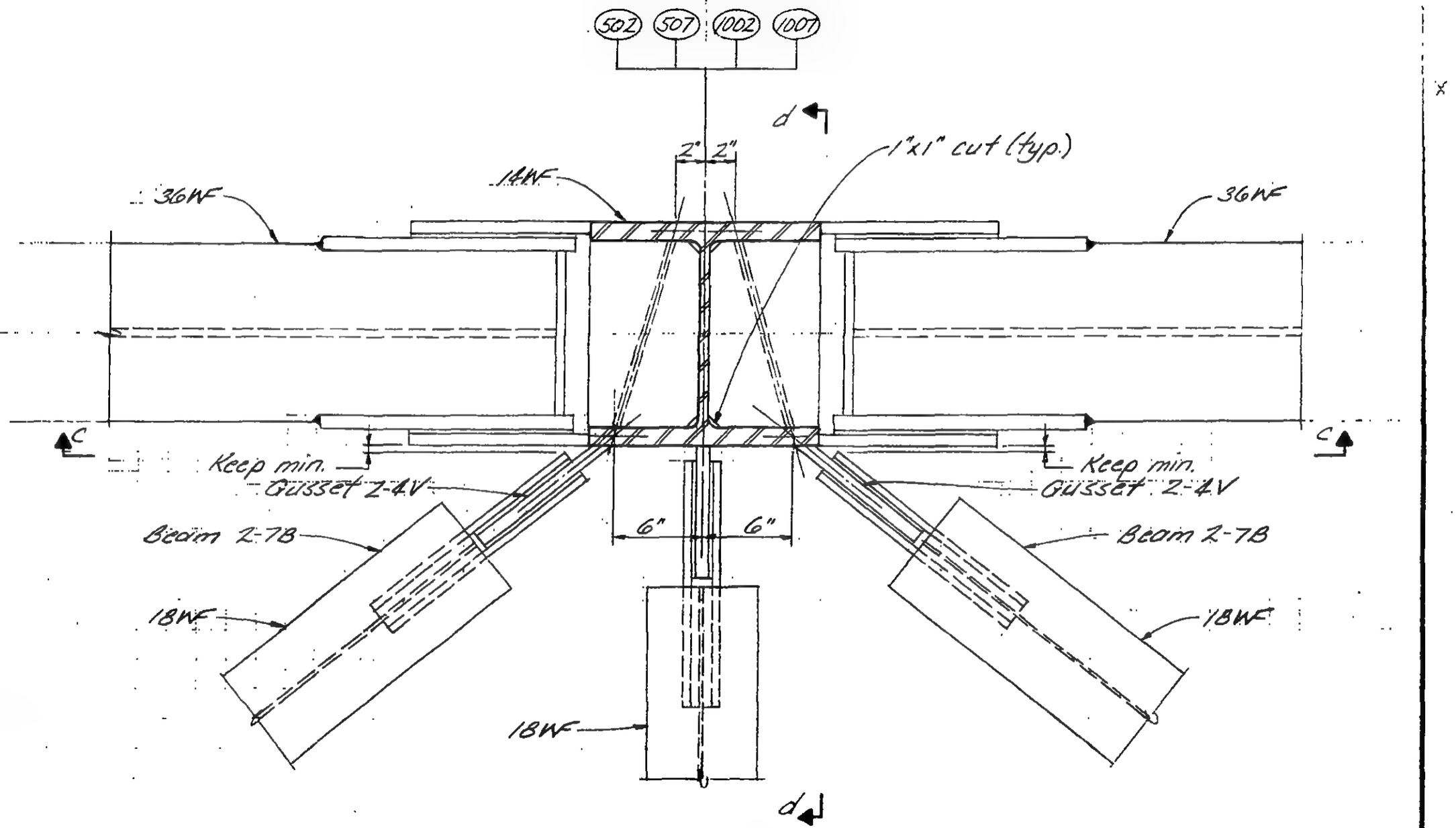

Plan

Detail 16-2B

(Col. 502 as shown)

(Cols. 507, 1002 & 1007 similar)

LICENSED PROFESSIONAL ENGINEER
LESLIE E. ROBERTSON
No. 34960
UNIVERSITY OF THE STATE OF NEW YORK

DESIGNED

DRAWN
J. Adams

REVISED

9-B16-2.3

SKILLING, HELLE, CHRISTIANSEN, ROBERTSON — Structural & Civil Engineers

PROJECT THE WORLD TRADE CENTER | TITLE FL 107-PH CONNECTION DETAILS + FL 110 | DATE 12-14-70

REVISIONS

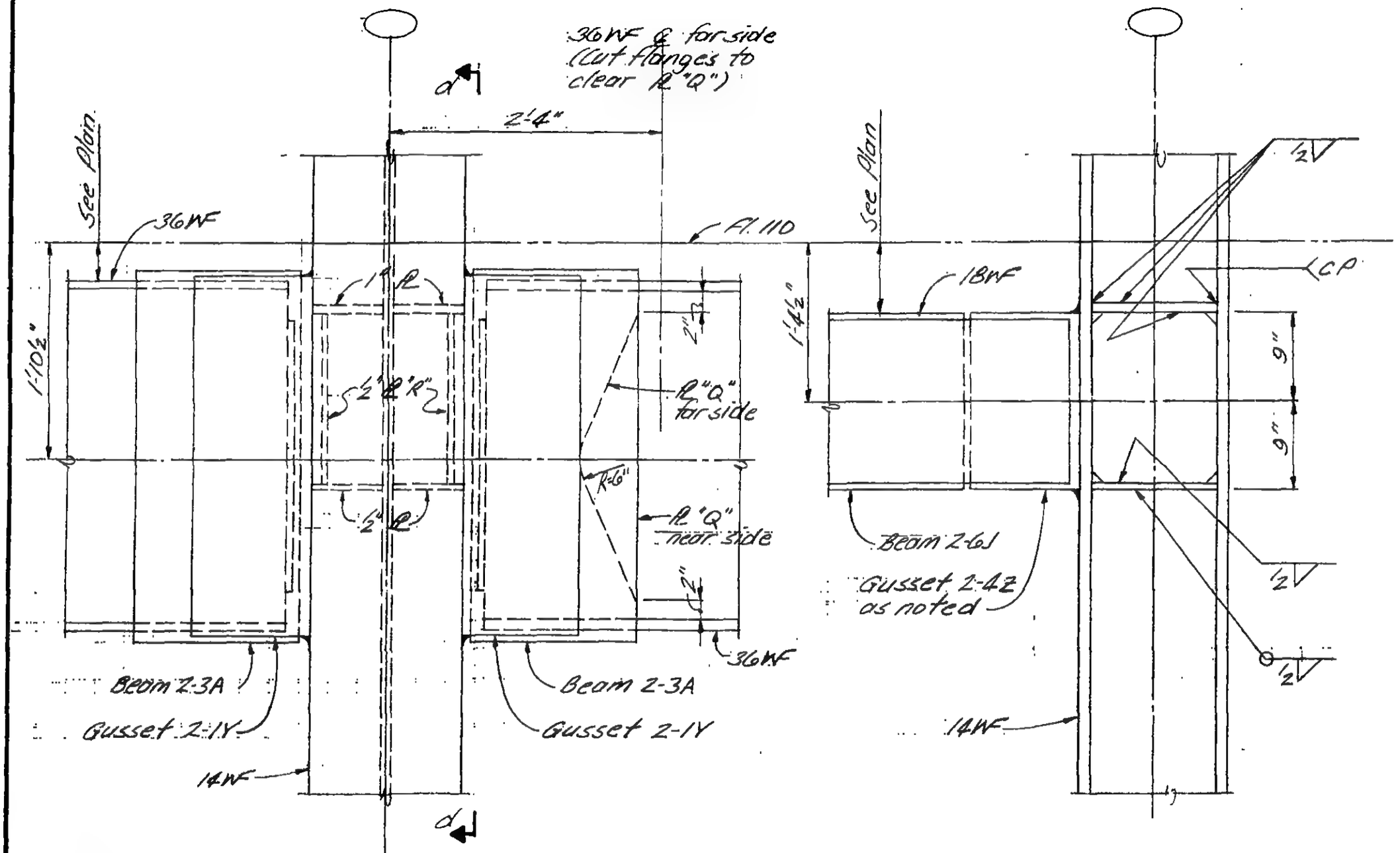

Section c-c

Section d-d

LICENSED PROFESSIONAL ENGINEER — LESLIE E. ROBERTSON — No. 34360 — UNIVERSITY OF THE STATE OF NEW YORK

DESIGNED

DRAWN J. Adams

REVIEWED

9-B16-2.4

SKILLING, HELLE, CHRISTIANSEN, ROBERTSON — Structural & Civil Engineers

PROJECT: THE WORLD TRADE CENTER | TITLE: FL 107-PH CONNECTION DETAILS - FL 110 | DATE: 4-1-70

REVISIONS

6/15/70

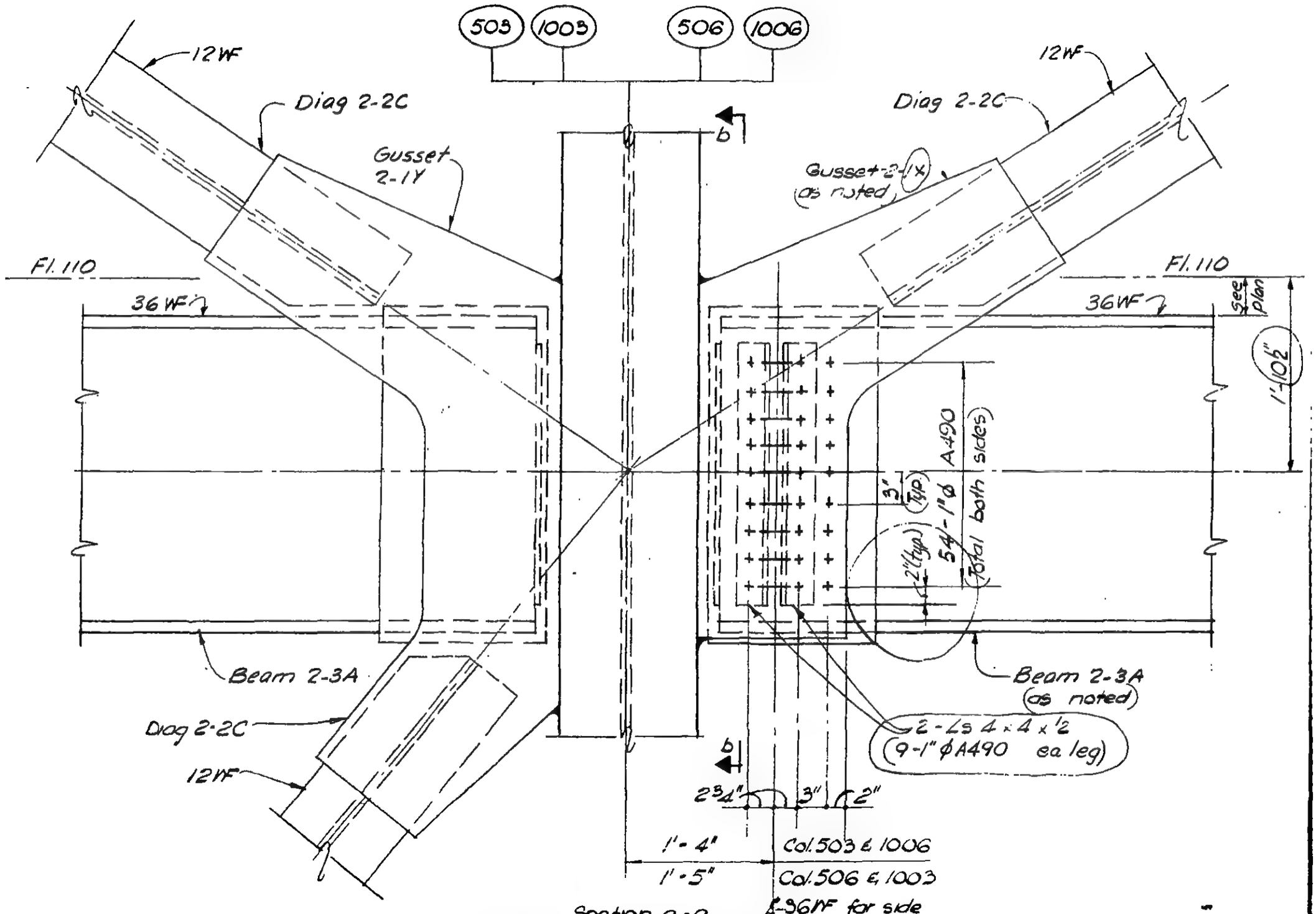

Section a-a

DETAIL 16-3A (Col. 503 as shown)

DETAIL 16-3B (Col. 1003)

DETAIL 16-3C (Col. 1006) } Similar & as noted

DETAIL 16-3D (Col. 506)

LICENSED PROFESSIONAL ENGINEER — LESLIE E. ROBERTSON — No. 34360 — UNIVERSITY OF THE STATE OF NEW YORK

DESIGNED: K. HWANG

DRAWN: A.F.

REVIEWED: E. Drakos

9-AB16-3.1

SKILLING, HELLE, CHRISTIANSEN, ROBERTSON — Structural & Civil Engineers

PROJECT THE WORLD TRADE CENTER | TITLE FL 107 PH CONNECTION DETAILS - FL 110 | DATE 4 - 1 - 70

REVISIONS

6/15/70

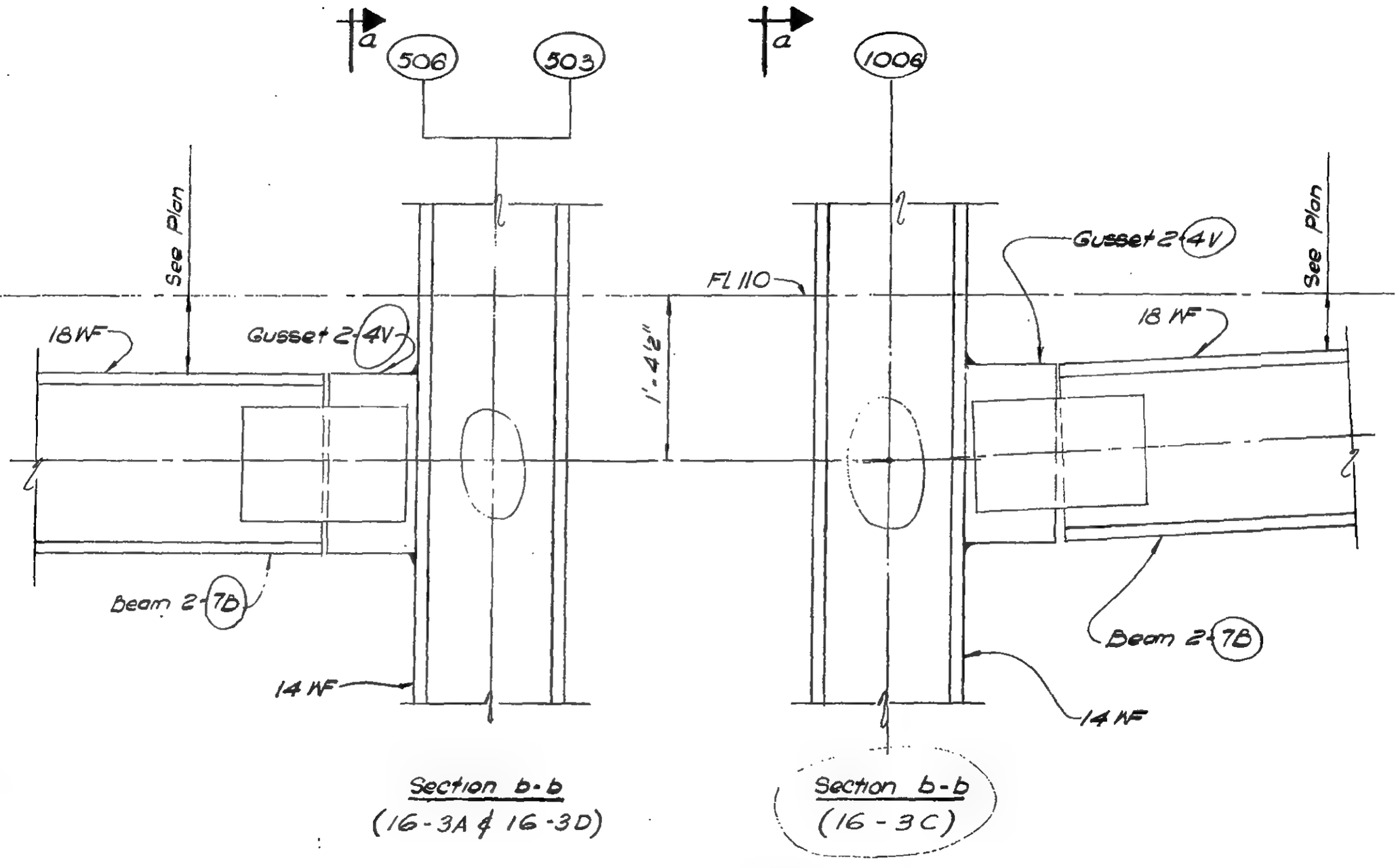

Section b-b
(16-3A & 16-3D)

Section b-b
(16-3C)

a a

LICENSED PROFESSIONAL ENGINEER
LESLIE E. ROBERTSON
No. 34360
UNIVERSITY OF THE STATE OF NEW YORK

DESIGNED K. HWANG

DRAWN W Clarke

REVIEWED E. Dracos

9-AB16-3.2

SKILLING, HELLE, CHRISTIANSEN, ROBERTSON — Structural & Civil Engineers

PROJECT THE WORLD TRADE CENTER | TITLE FL 107 PH CONNECTION DETAILS - FL 110 | DATE 4-1-70

REVISIONS

6/15/70

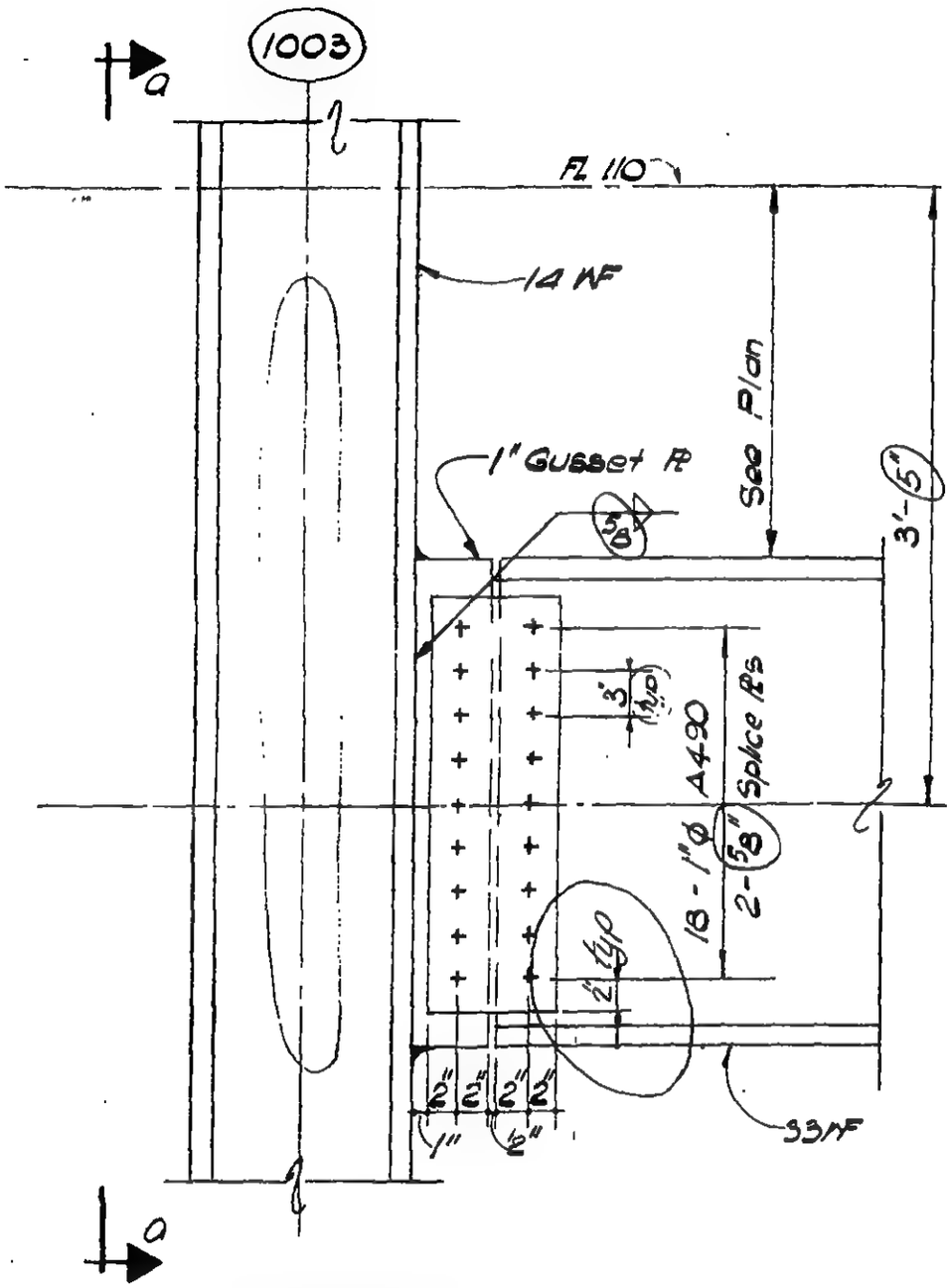

Section b-b

(16-38)

LICENSED PROFESSIONAL ENGINEER
LESLIE E. ROBERTSON
No. 34360
UNIVERSITY OF THE STATE OF NEW YORK

DESIGNED K. HWANG

DRAWN W. Clarke

REVIEWED E. Drakos

9-AB16-3.3

SKILLING, HELLE, CHRISTIANSEN, ROBERTSON — Structural & Civil Engineers

PROJECT: THE WORLD TRADE CENTER | TITLE: FL 107-114 CONNECTION DETAILS - FL 110. | DATE: 12-14-70

REVISIONS

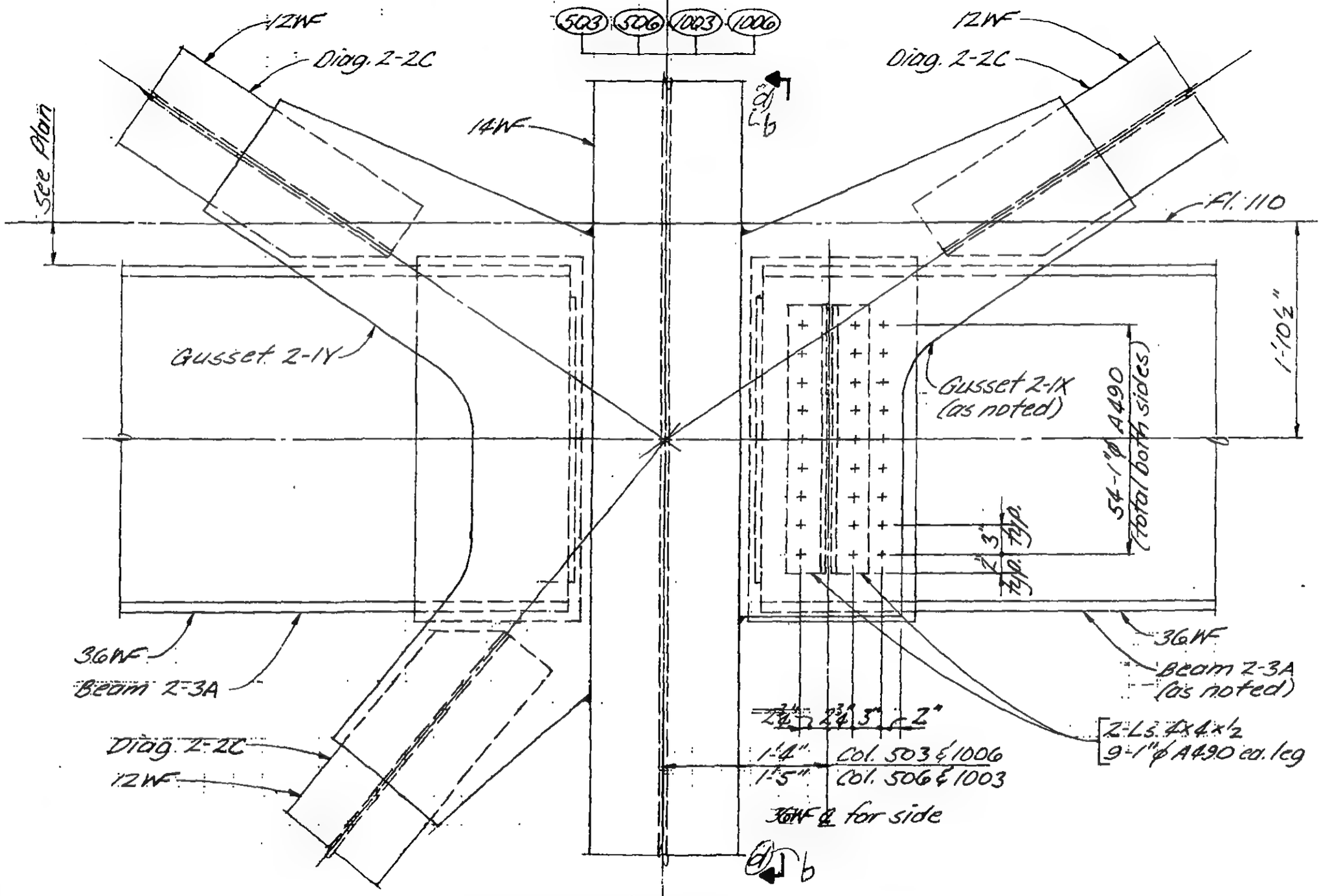

Section c-c

Detail 16-3E (Col. 503) as shown

Detail 16-3F (Col. 1003) } similar and as noted

Detail 16-3G (Col. 1006) } similar and as noted

Detail 16-3H (Col. 506) } similar and as noted

LICENSED PROFESSIONAL ENGINEER — LESLIE E. ROBERTSON — No. 34360 — UNIVERSITY OF THE STATE OF NEW YORK

DESIGNED

DRAWN J. Adams

REVIEWED

9-B16-3.4

SKILLING, HELLE, CHRISTIANSEN, ROBERTSON — Structural & Civil Engineers

PROJECT: THE WORLD TRADE CENTER | TITLE: FL 107-RH CONNECTION DETAILS - FL 110 | DATE: 12/14/10

REVISIONS

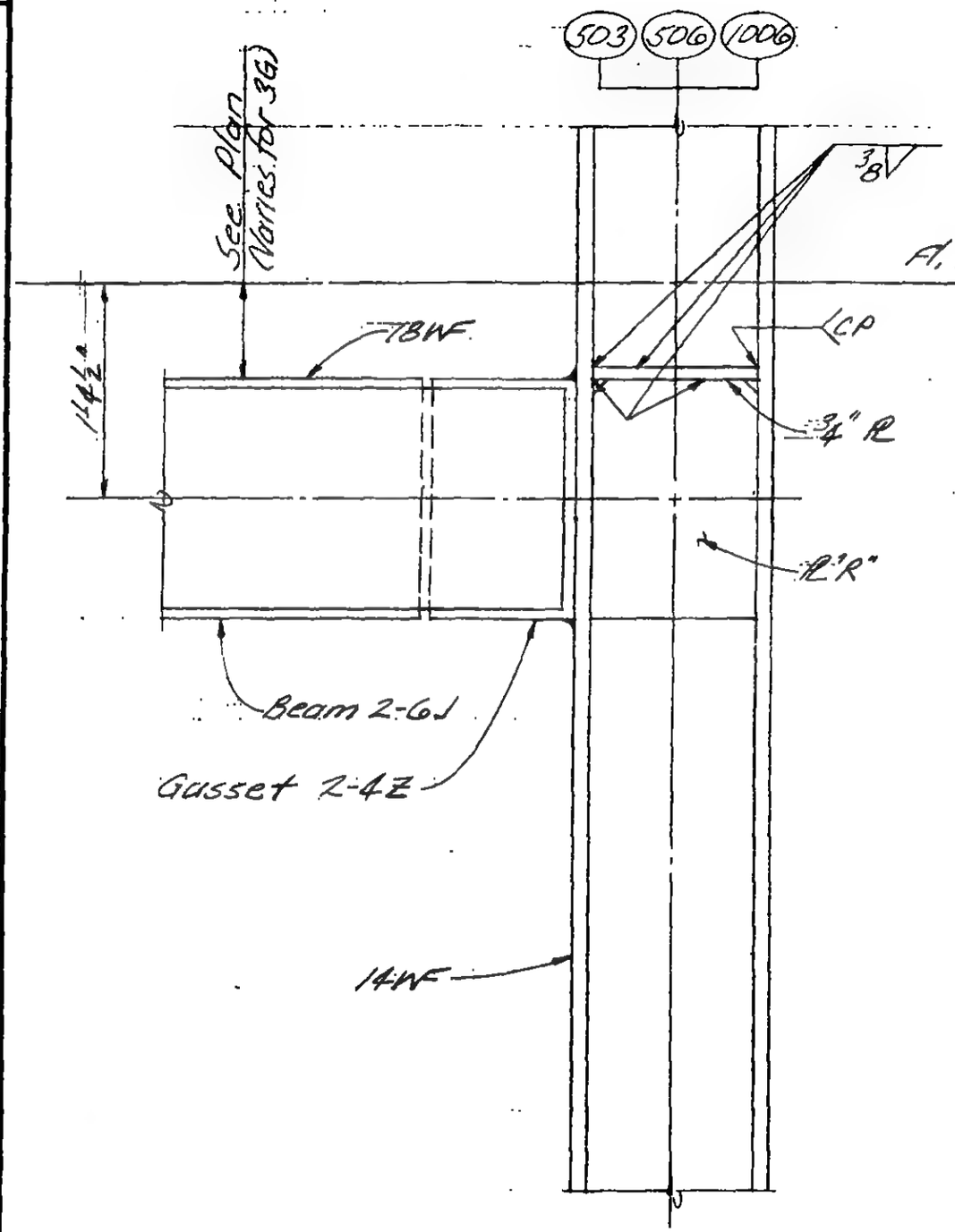

Section b-b
(16-3E, 16-3G, 16-3H)

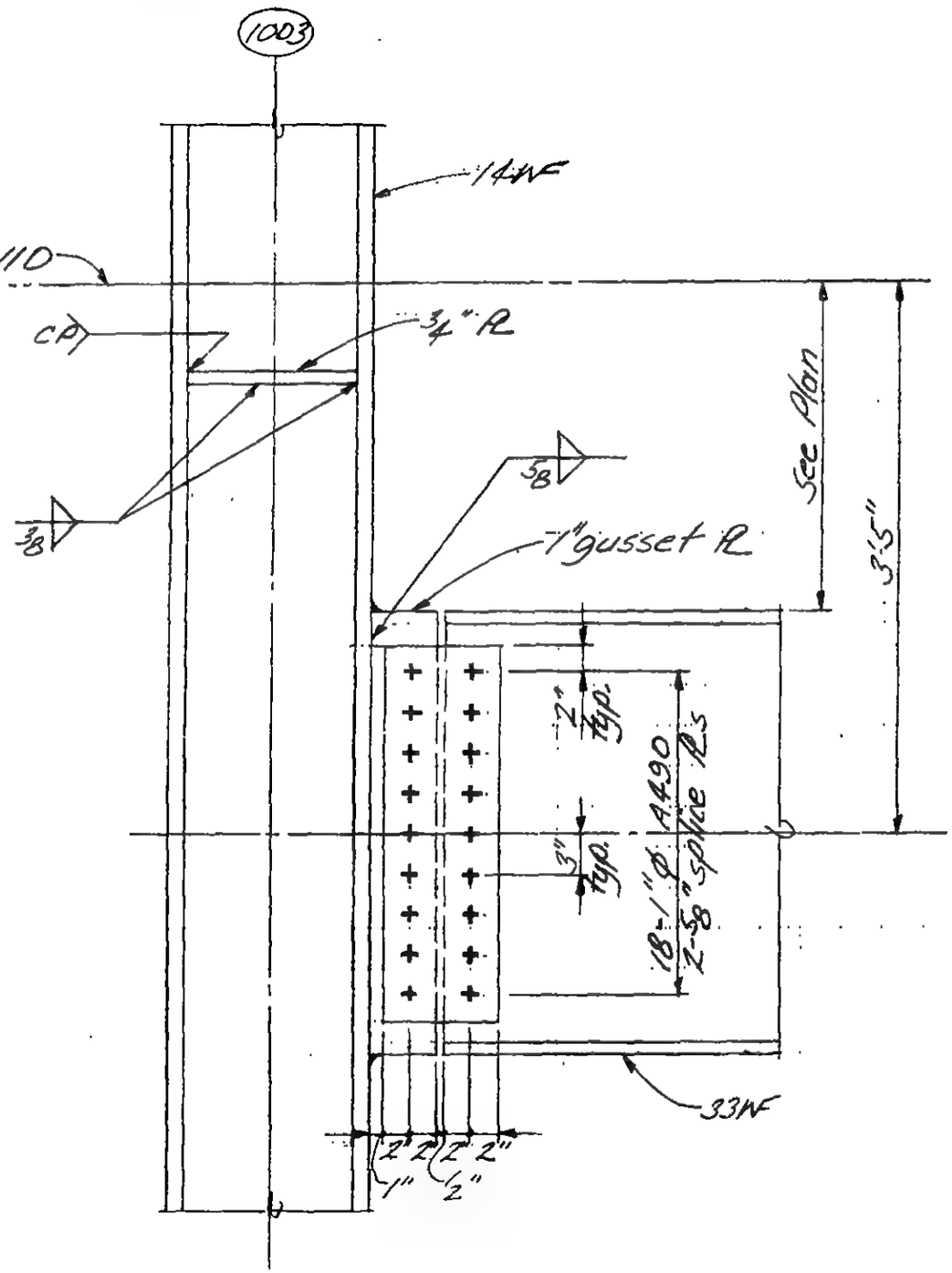

Section b-b
(16-3F)

LICENSED PROFESSIONAL ENGINEER — LESLIE E. ROBERTSON — NO. 34960 — UNIVERSITY OF THE STATE OF NEW YORK

DESIGNED

DRAWN J. Adams

REVIEWED

9-B16-35

SKILLING, HELLE, CHRISTIANSEN, ROBERTSON — Structural & Civil Engineers

PROJECT: THE WORLD TRADE CENTER | TITLE: FLOOR 107-PH CONNECTION DETAIL - FL 110 | DATE: 4-1-70

REVISIONS

6/15/70
12/14/70

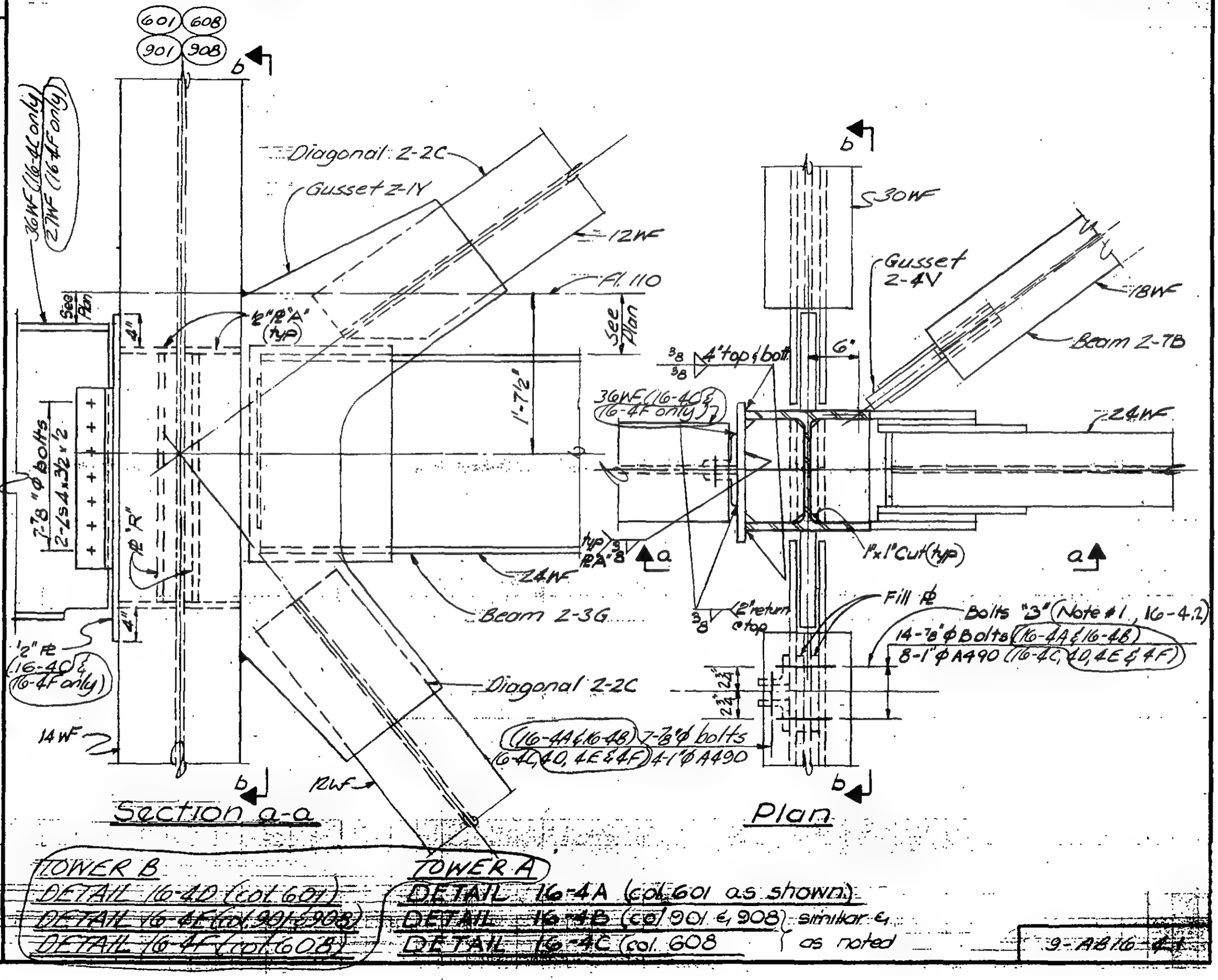

TOWER B
DETAIL 16-4D (col. 601)
DETAIL 16-4E (col. 901 & 908)
DETAIL 16-4F (col. 608)

TOWER A
DETAIL 16-4A (col. 601 as shown)
DETAIL 16-4B (col. 901 & 908) similar & as noted
DETAIL 16-4C (col. 608)

LICENSED PROFESSIONAL ENGINEER — LESLIE E. ROBERTSON — No. 34360 — UNIVERSITY OF THE STATE OF NEW YORK

DESIGNED C. HWANG
DRAWN
REVIEWED E. Dyakos

9-AB 16-4.1

SKILLING, HELLE, CHRISTIANSEN, ROBERTSON — Structural & Civil Engineers

PROJECT: THE WORLD TRADE CENTER | TITLE: FLOOR 107-PH CONNECTION DETAIL - FL 110 | DATE: 4-7-70

REVISIONS

6/15/70
12/14/70

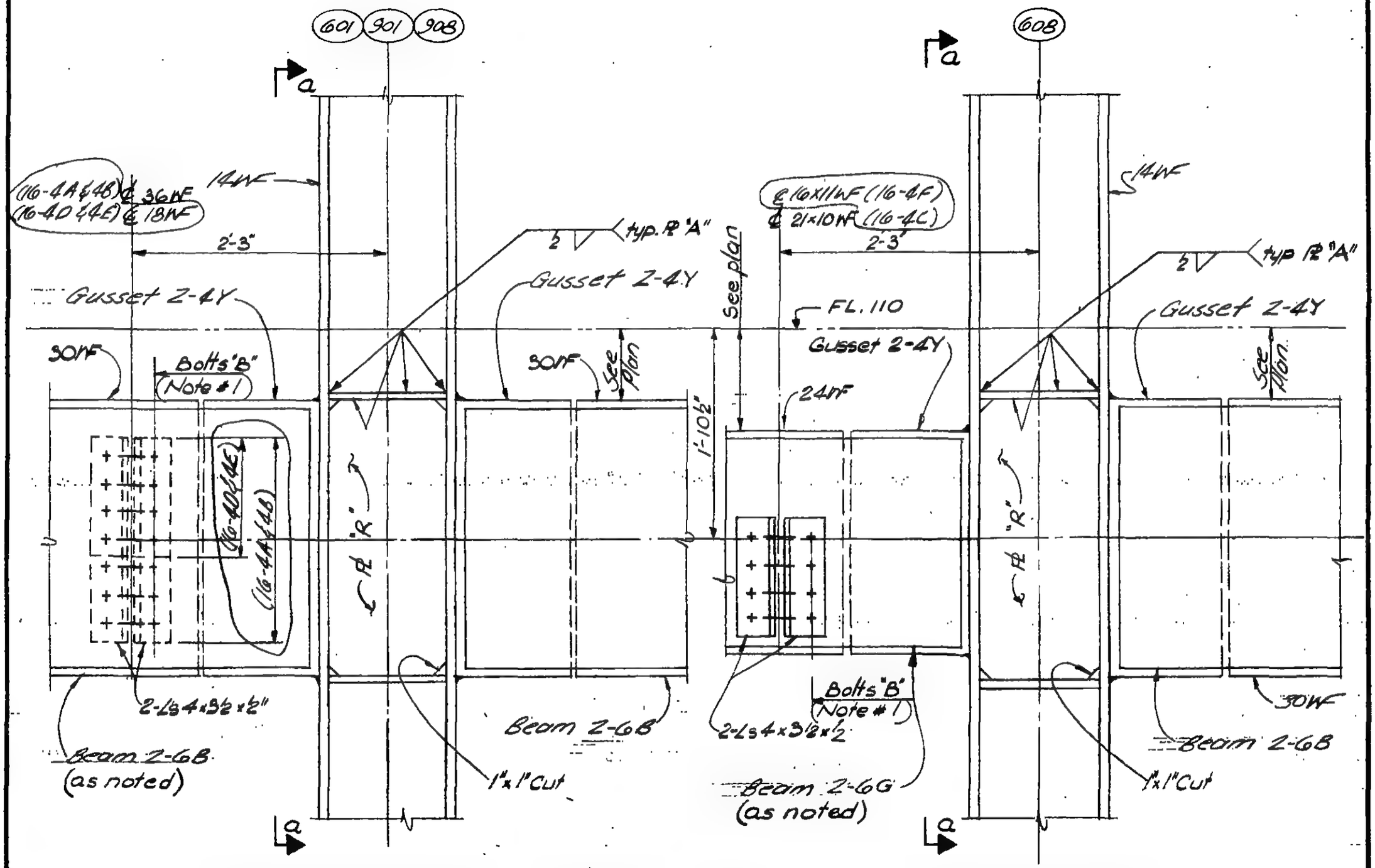

Section b-b
(16-4A, 4B, (4D & 4E))

Section b-b
(16-4C & 16-4F)

Notes:
1. Bolts "B" shown in this detail to be used in lieu of 9-AB 2-6.1 requirements

LICENSED PROFESSIONAL ENGINEER — LESLIE E. ROBERTSON — No. 34560 — UNIVERSITY OF THE STATE OF NEW YORK

DESIGNED: K. HWANG
DRAWN:
REVIEWED: E. Dravos

9-AB 16a-4

SKILLING, HELLE, CHRISTIANSEN, ROBERTSON — Structural & Civil Engineers

PROJECT: THE WORLD TRADE CENTER | TITLE: FL 107 PH. CONNECTION DETAILS - FL 110 | DATE: 4-1-70

REVISIONS

6/15/70

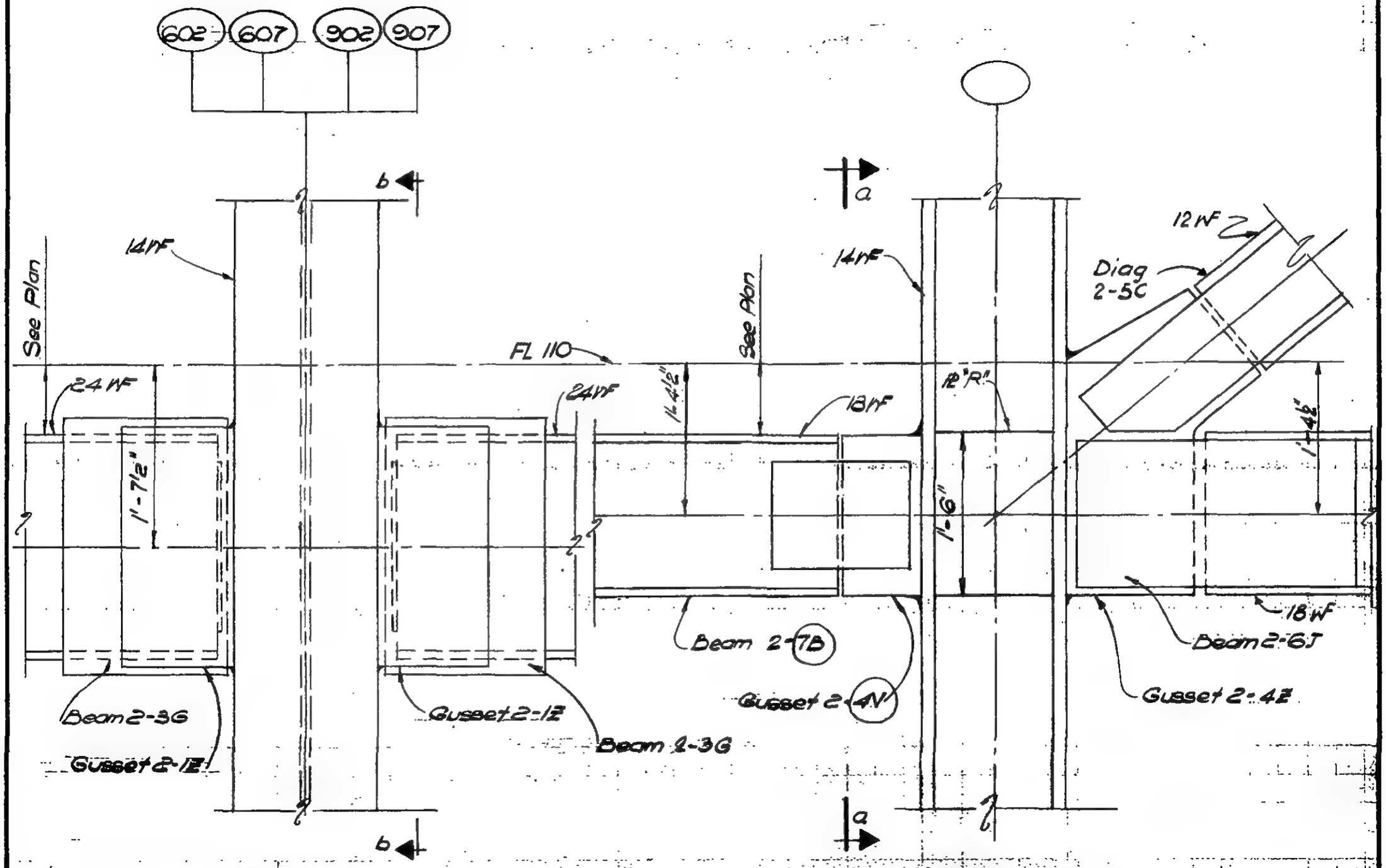

Section a-a

Section b-b

(16-5A & 16-5B)

DETAIL 16-5A (Col. 602 as shown)
DETAIL 16-5B (Col. 902 & 907) similar &
DETAIL 16-5C (Col. 607) as noted

LICENSED PROFESSIONAL ENGINEER — LESLIE E. ROBERTSON — No. 34960 — UNIVERSITY OF THE STATE OF NEW YORK

DESIGNED: K. HWANG
DRAWN: N. Clarke
REVIEWED: E. Dyakos

9-AD-16-5.1

SKILLING, HELLE, CHRISTIANSEN, ROBERTSON — Structural & Civil Engineers

PROJECT: THE WORLD TRADE CENTER | TITLE: FL 107 PH CONNECTION DETAILS - FL 110 | DATE: 4-1-70

REVISIONS

6/15/70

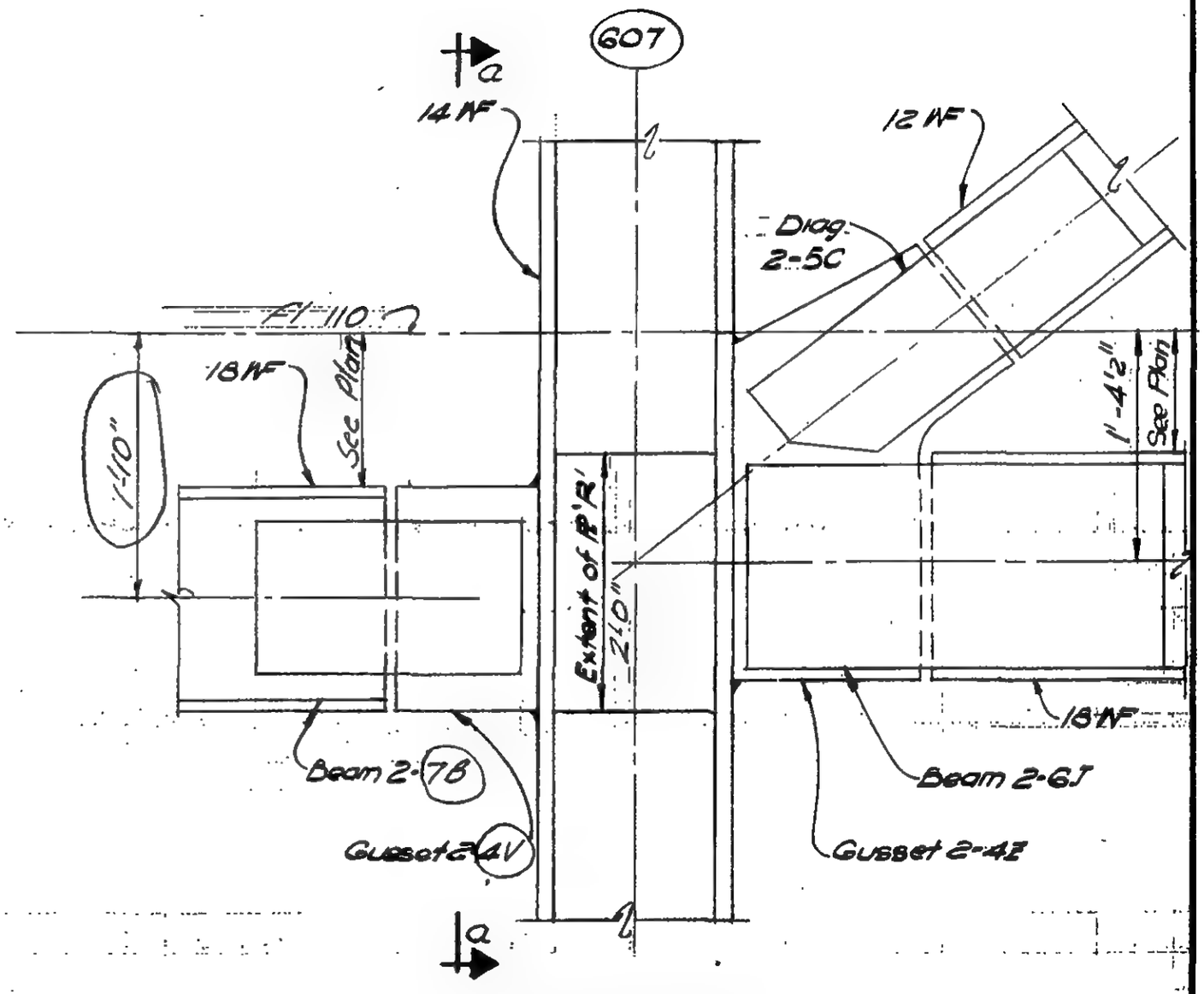

Section b-b
(16-5C)

LICENSED PROFESSIONAL ENGINEER
LESLIE E. ROBERTSON
No. 34360
UNIVERSITY OF THE STATE OF NEW YORK

DESIGNED

DRAWN
W. Clarke

REVIEWED

9-AB/B-5-2

SKILLING, HELLE, CHRISTIANSEN, ROBERTSON — Structural & Civil Engineers

PROJECT: THE WORLD TRADE CENTER | TITLE: FC 207-BK CONNECTION DETAILS - FL 110 | DATE: 12-14-70

REVISIONS

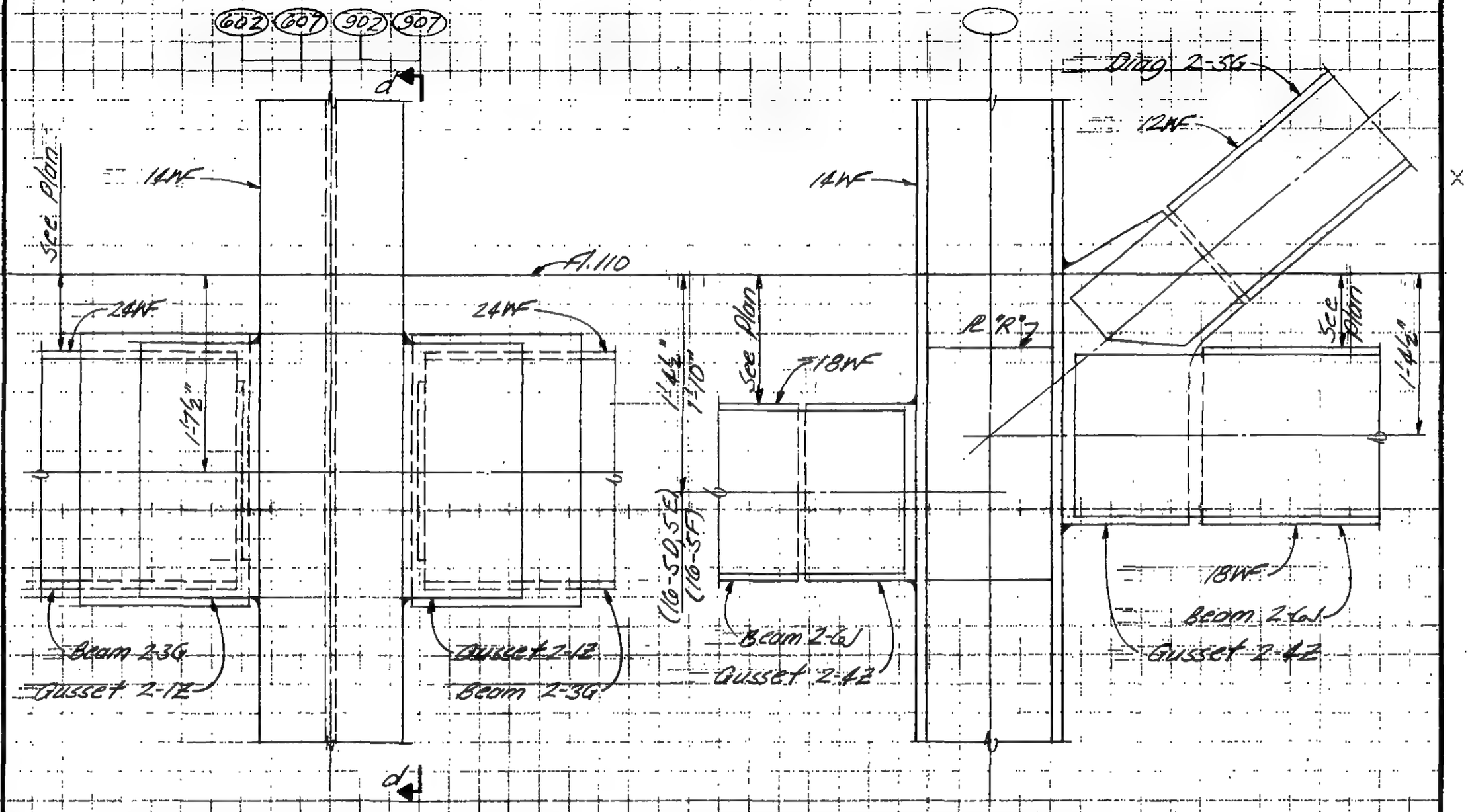

Section c-c

Section d-d

Detail 16-5D (Col. 602 as shown)
Detail 16-5E (Cols. 902 & 907) Similar and as noted
Detail 16-5F (Col. 607)

LICENSED PROFESSIONAL ENGINEER — LESLIE E. ROBERTSON — No. 34360 — UNIVERSITY OF THE STATE OF NEW YORK

DESIGNED

DRAWN

REVIEWED

9-B16-53

SKILLING, HELLE, CHRISTIANSEN, ROBERTSON — Structural & Civil Engineers

PROJECT: THE WORLD TRADE CENTER | TITLE: Fl. 107-DH CONNECTION DETAIL - FL 110 | DATE: 4-1-70

REVISIONS
6-15-70
12-14-70

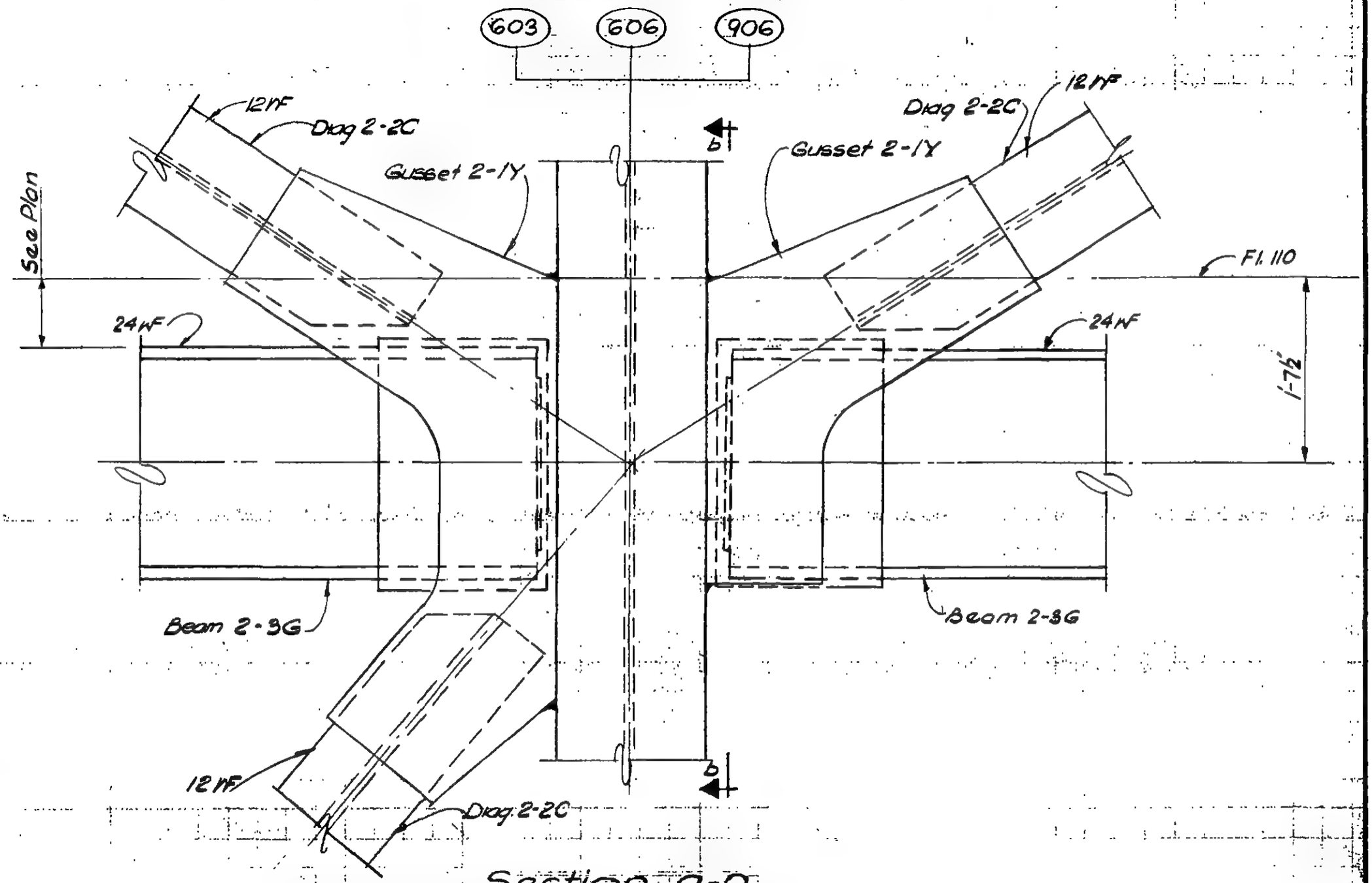

Section a-a

Tower B	Tower A
DETAIL 16-6H	DETAIL 16-6D (Col. 603 as shown)
DETAIL 16-6G	DETAIL 16-6C (Col. 606) similar &
DETAIL 16-6E	DETAIL 16-6A (Col. 906) as noted

LICENSED PROFESSIONAL ENGINEER — LESLIE E. ROBERTSON — No. 34360 — UNIVERSITY OF THE STATE OF NEW YORK

DESIGNED: I. Patel
DRAWN: D. Huggins
REVIEWED: E. Dravos

9-AB16-6.1

SKILLING, HELLE, CHRISTIANSEN, ROBERTSON — Structural & Civil Engineers

PROJECT: THE WORLD TRADE CENTER | TITLE: FLOOR 107 - PH CONNECTION DETAILS - FL 110 | DATE: 4-1-70

REVISIONS
6-15-70
12-14-70

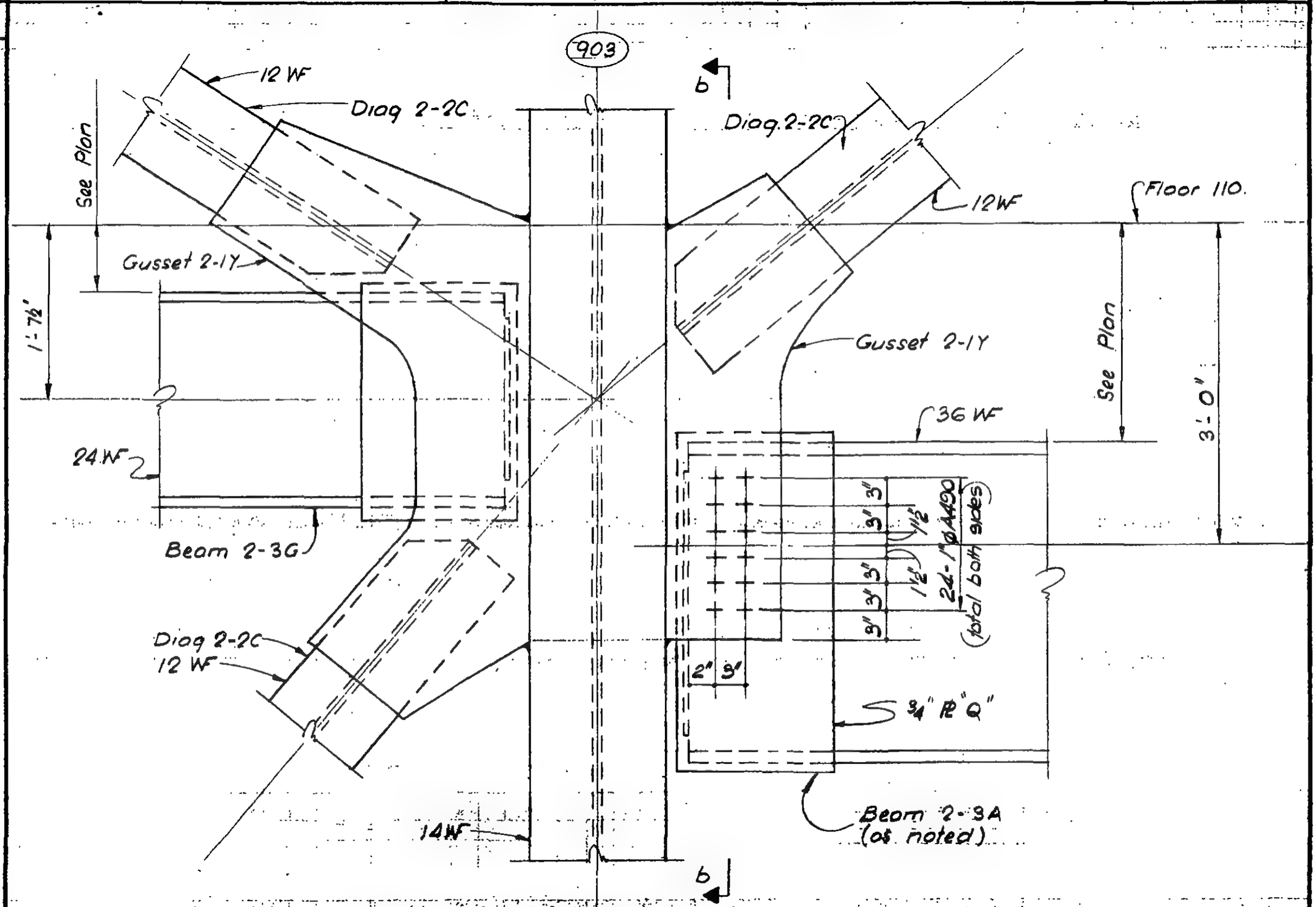

Section 0-0

DETAIL 16-6B Tower A

DETAIL 16-6F Tower B

LICENSED PROFESSIONAL ENGINEER
LESLIE E. ROBERTSON
No. 34360
UNIVERSITY OF THE STATE OF NEW YORK

DESIGNED K. HWANG
DRAWN T. Terrelonge
REVIEWED E. Drakos

9-AB16-6.2

SKILLING, HELLE, CHRISTIANSEN, ROBERTSON — Structural & Civil Engineers

PROJECT: THE WORLD TRADE CENTER | TITLE: FL 107 PH. CONNECTION DETAILS - FL 110 | DATE: 4-1-70

REVISIONS

6-15-70

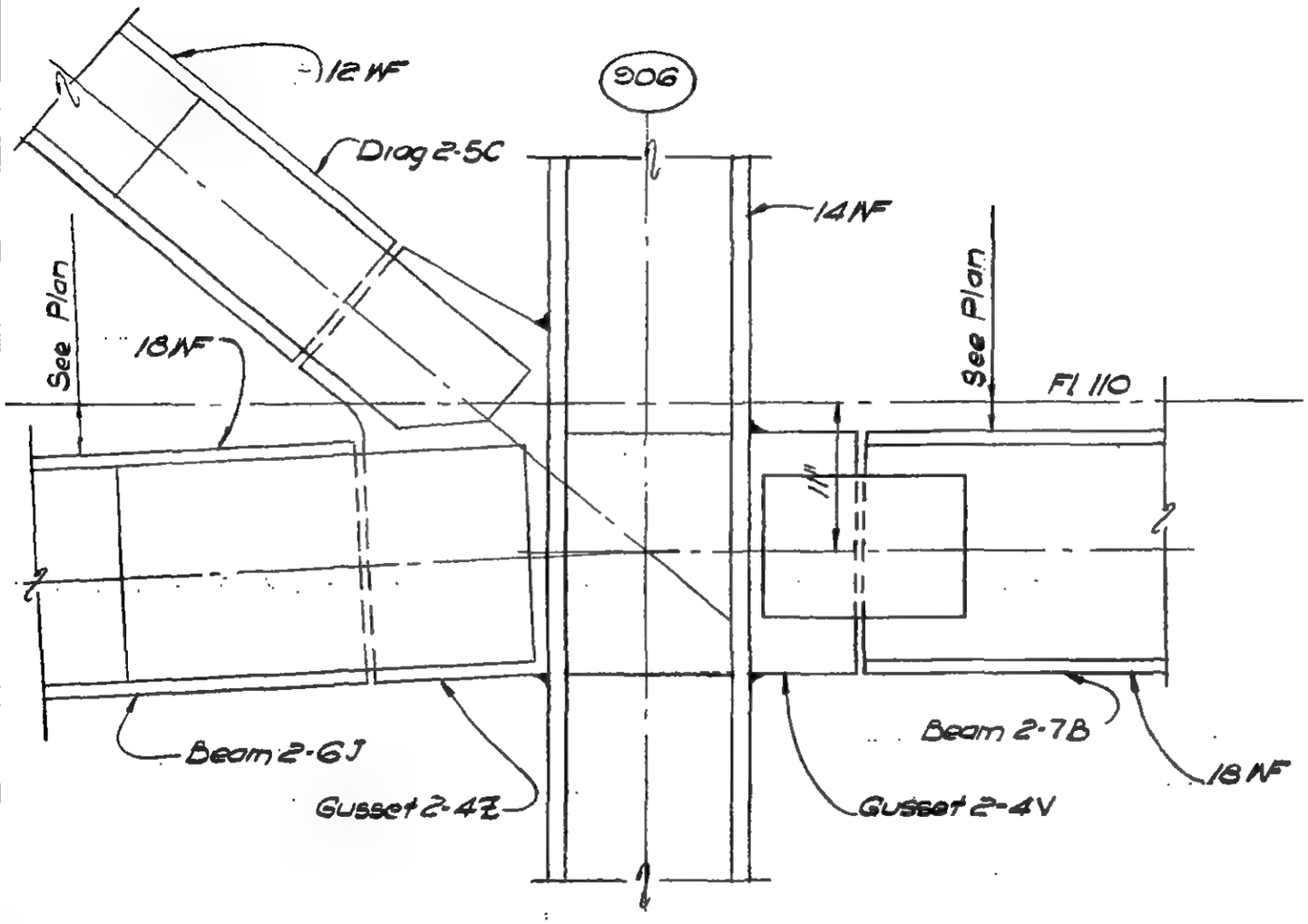

Section b-b
(16-6A)

LICENSED PROFESSIONAL ENGINEER
LESLIE E. ROBERTSON
No. 34960
UNIVERSITY OF THE STATE OF NEW YORK

DESIGNED

DRAWN
W. Clarke

REVIEWED

9-AB12-6.3

SKILLING, HELLE, CHRISTIANSEN, ROBERTSON — Structural & Civil Engineers

PROJECT THE WORLD TRADE CENTER | TITLE FL 107-PH CONNECTION DETAILS - FL 110 | DATE 4-1-70

REVISIONS

6-15-70

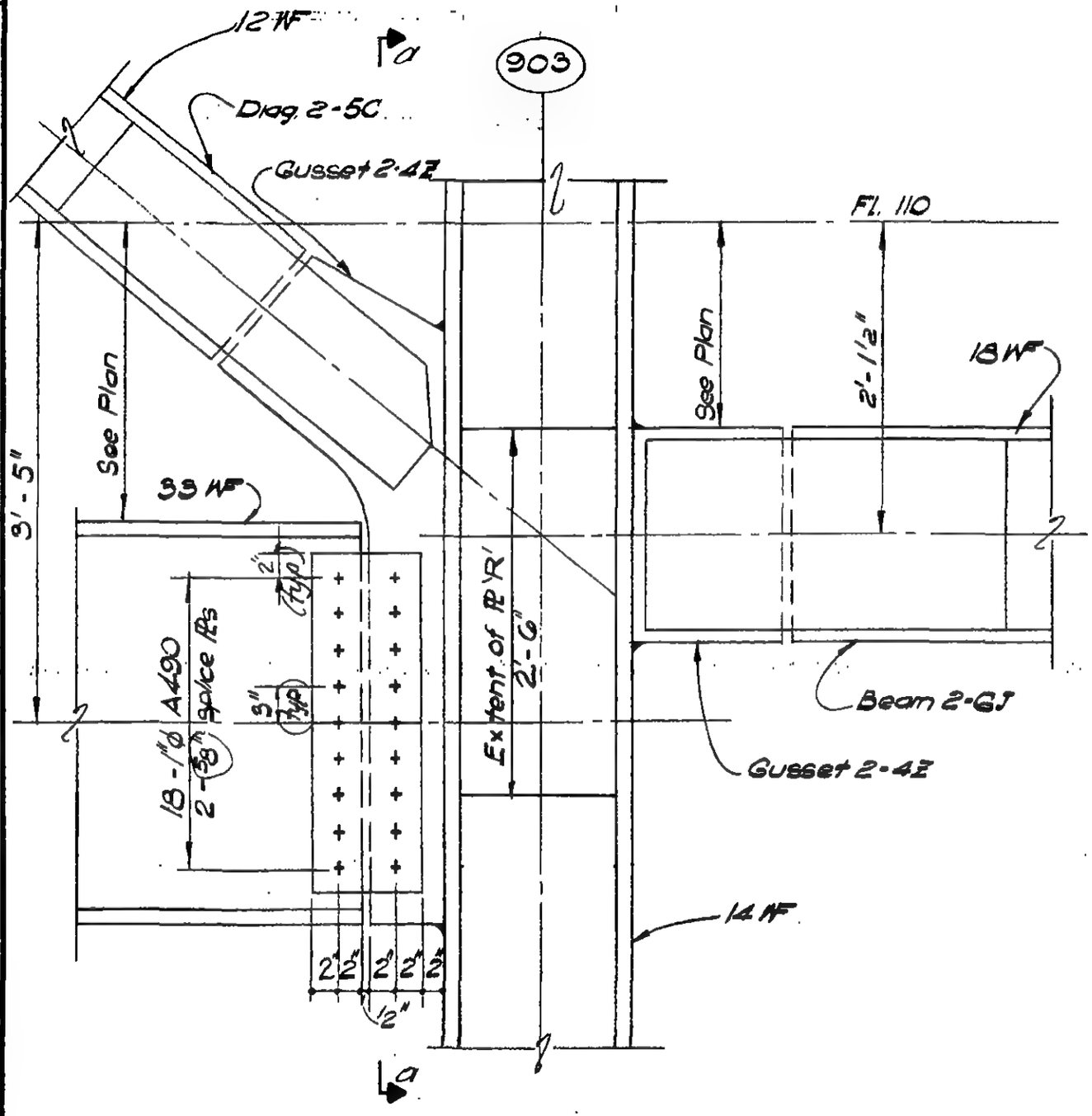

Section b-b

(16-6B)

LICENSED PROFESSIONAL ENGINEER — LESLIE E. ROBERTSON — No. 34360 — UNIVERSITY OF THE STATE OF NEW YORK

DESIGNED K. HWANG

DRAWN W. Clarke

REVIEWED E. Drakos

9-AB16-6.4

SKILLING, HELLE, CHRISTIANSEN, ROBERTSON — Structural & Civil Engineers

PROJECT: THE WORLD TRADE CENTER | TITLE: FL 107 - PH CONNECTION DETAILS - FL 110 | DATE: 4-1-70

REVISIONS

6-15-70
7-8-70

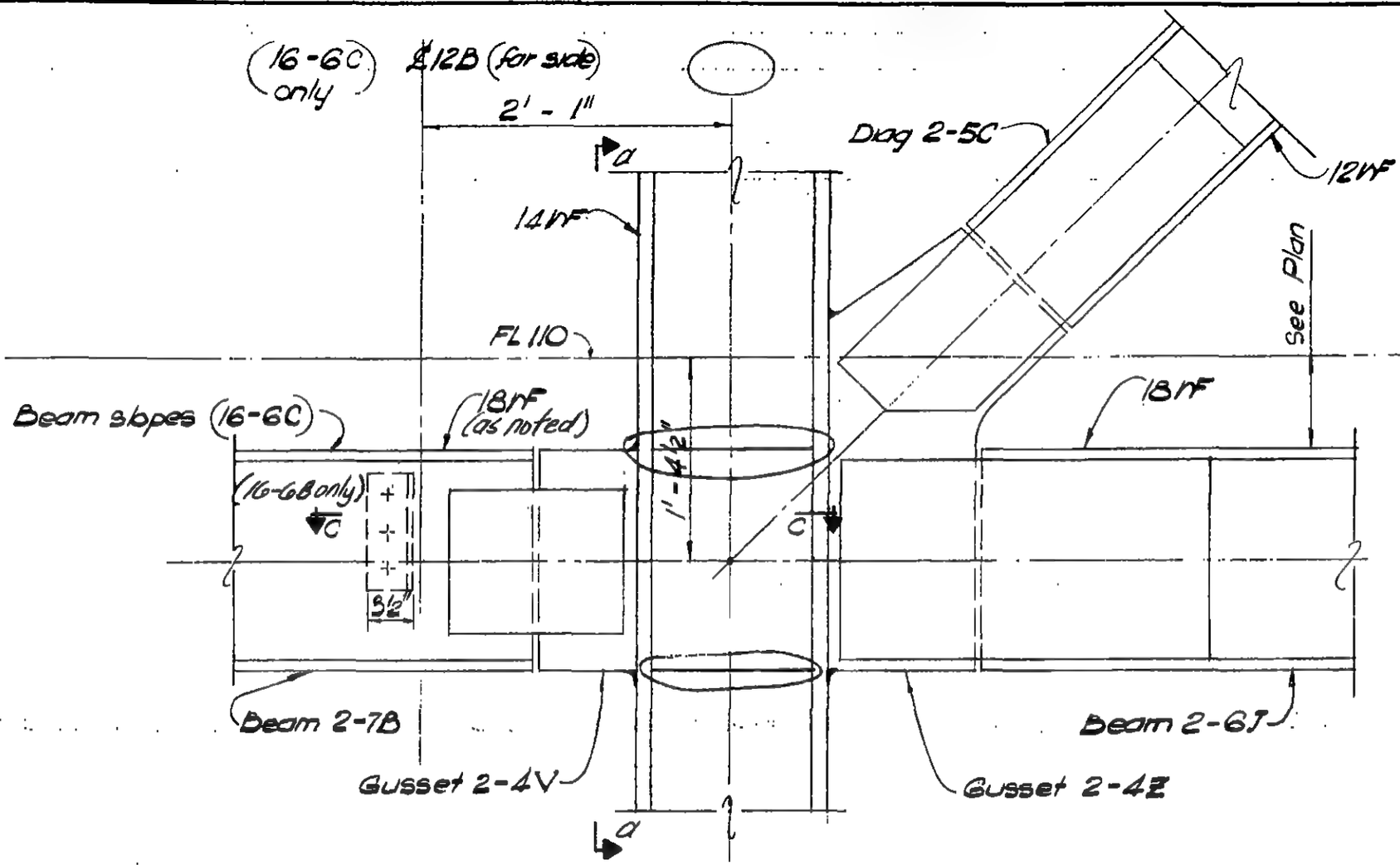

Section b-b
(16-6C & 16-6D)

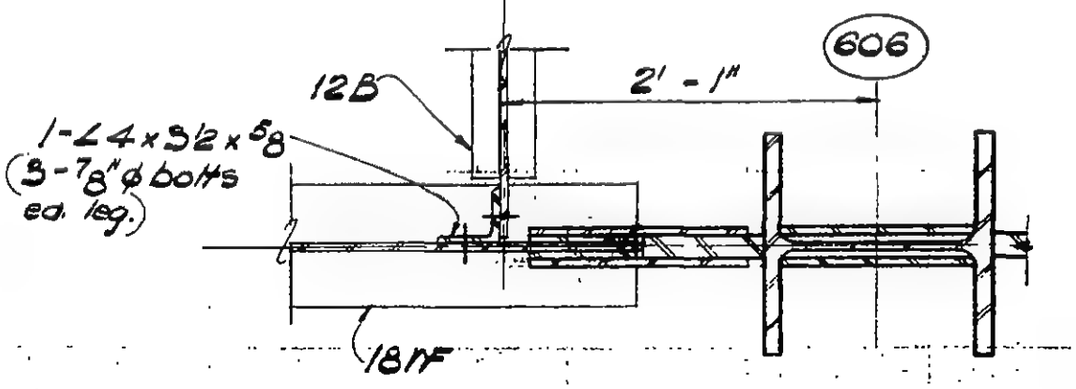

Section c-c
(16-6C only)

LICENSED PROFESSIONAL ENGINEER — LESLIE E. ROBERTSON — No. 34360 — UNIVERSITY OF THE STATE OF NEW YORK

DESIGNED: K. HWANG
DRAWN: M. Clarke
REVIEWED: E. Dramos

9-AB16-6.5

SKILLING, HELLE, CHRISTIANSEN, ROBERTSON — Structural & Civil Engineers

PROJECT: THE WORLD TRADE CENTER | TITLE: EL 107-PH CONNECTION DETAILS - EL 110 | DATE: 12-14-70

REVISIONS

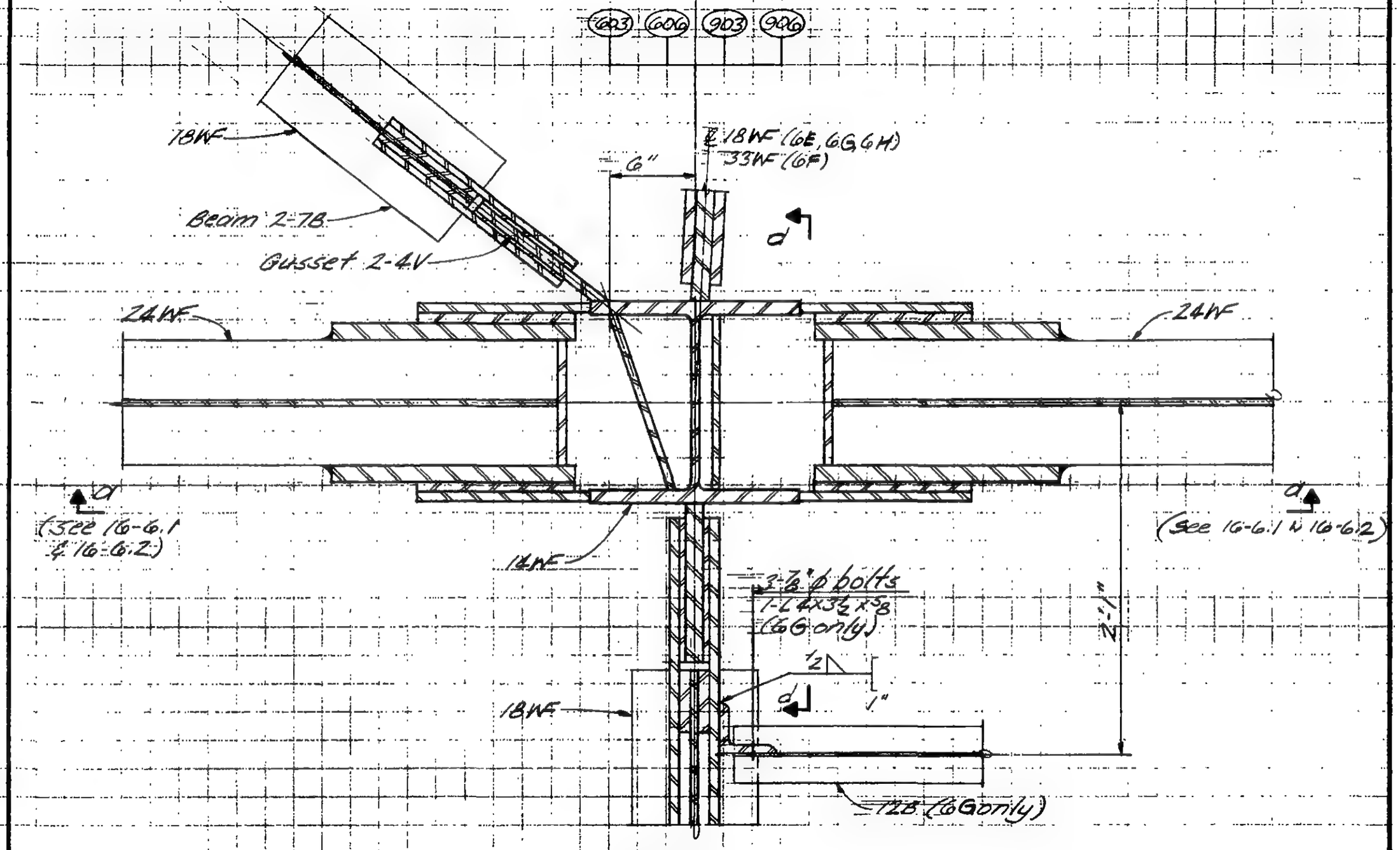

Plan

Detail 16-6.E (Col. 906)
Detail 16-6.F (Col. 903) — Similar and as noted
Detail 16-6.G (Col. 606)
Detail 16-6.H (Col. 603) — As shown

LICENSED PROFESSIONAL ENGINEER
LESLIE E. ROBERTSON
No. 34360
UNIVERSITY OF THE STATE OF NEW YORK

DESIGNED

DRAWN

REVIEWED

9-B16-6.6

SKILLING, HELLE, CHRISTIANSEN, ROBERTSON — Structural & Civil Engineers

PROJECT: THE WORLD TRADE CENTER | TITLE: FL. 107-PH CONNECTION DETAILS - FL 110 | DATE: 12-14-70

REVISIONS

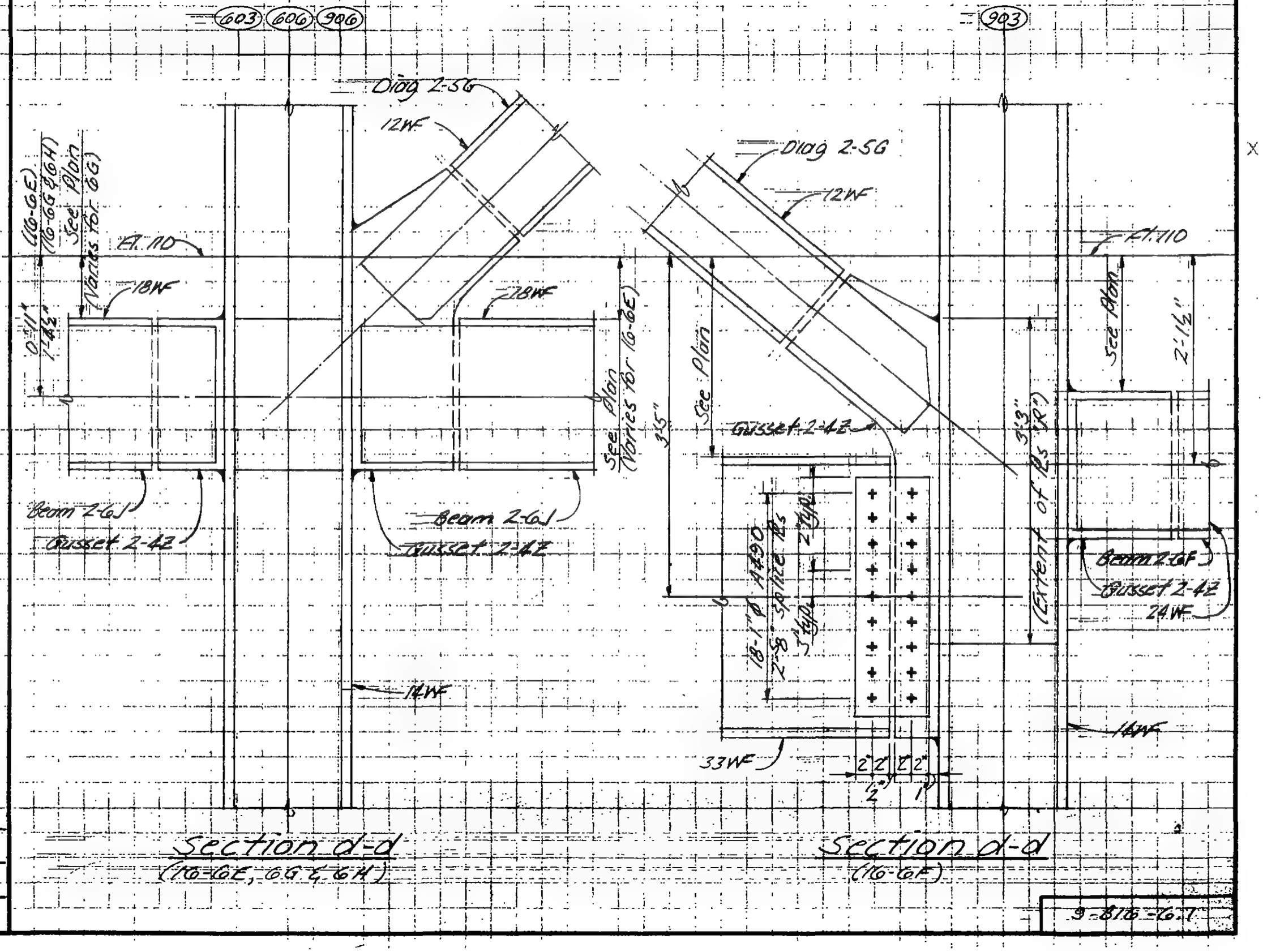

Section d-d
(16-6E, 6G & 6H)

Section d-d
(16-6F)

LICENSED PROFESSIONAL ENGINEER — LESLIE E. ROBERTSON — No. 34360 — UNIVERSITY OF THE STATE OF NEW YORK

DESIGNED

DRAWN J. Williams

REVIEWED

9-816-6.1

SKILLING, HELLE, CHRISTIANSEN, ROBERTSON — Structural & Civil Engineers

PROJECT THE WORLD TRADE CENTER | TITLE FL 107 - PH CONNECTION DETAILS - FL 110 | DATE 4 - 1 - 70

REVISIONS

6-18-70

12-14-70

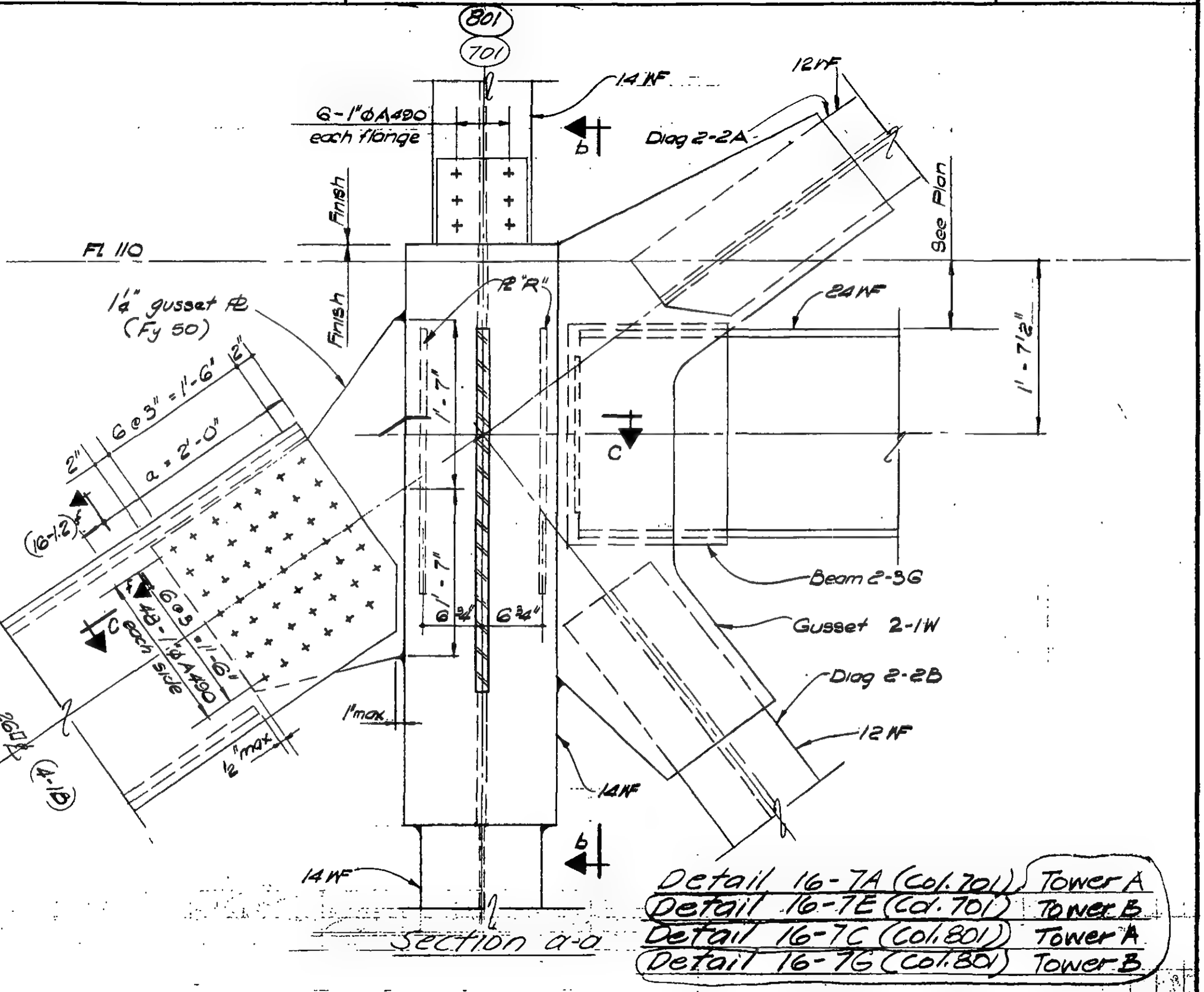

Detail 16-7A (Col. 701) Tower A
Detail 16-7E (Col. 701) Tower B
Detail 16-7C (Col. 801) Tower A
Detail 16-7G (Col. 801) Tower B

LICENSED PROFESSIONAL ENGINEER — LESLIE E. ROBERTSON — No. 34360 — UNIVERSITY OF THE STATE OF NEW YORK

DESIGNED H. Vox

DRAWN W. Clarke

REVIEWED E. Drakos

9-AB16-7.1

SKILLING, HELLE, CHRISTIANSEN, ROBERTSON — Structural & Civil Engineers

PROJECT: THE WORLD TRADE CENTER

TITLE: FL 107 PH CONNECTION DETAILS - FL 110

DATE: 4-1-70

REVISIONS

6-18-70

12-14-70

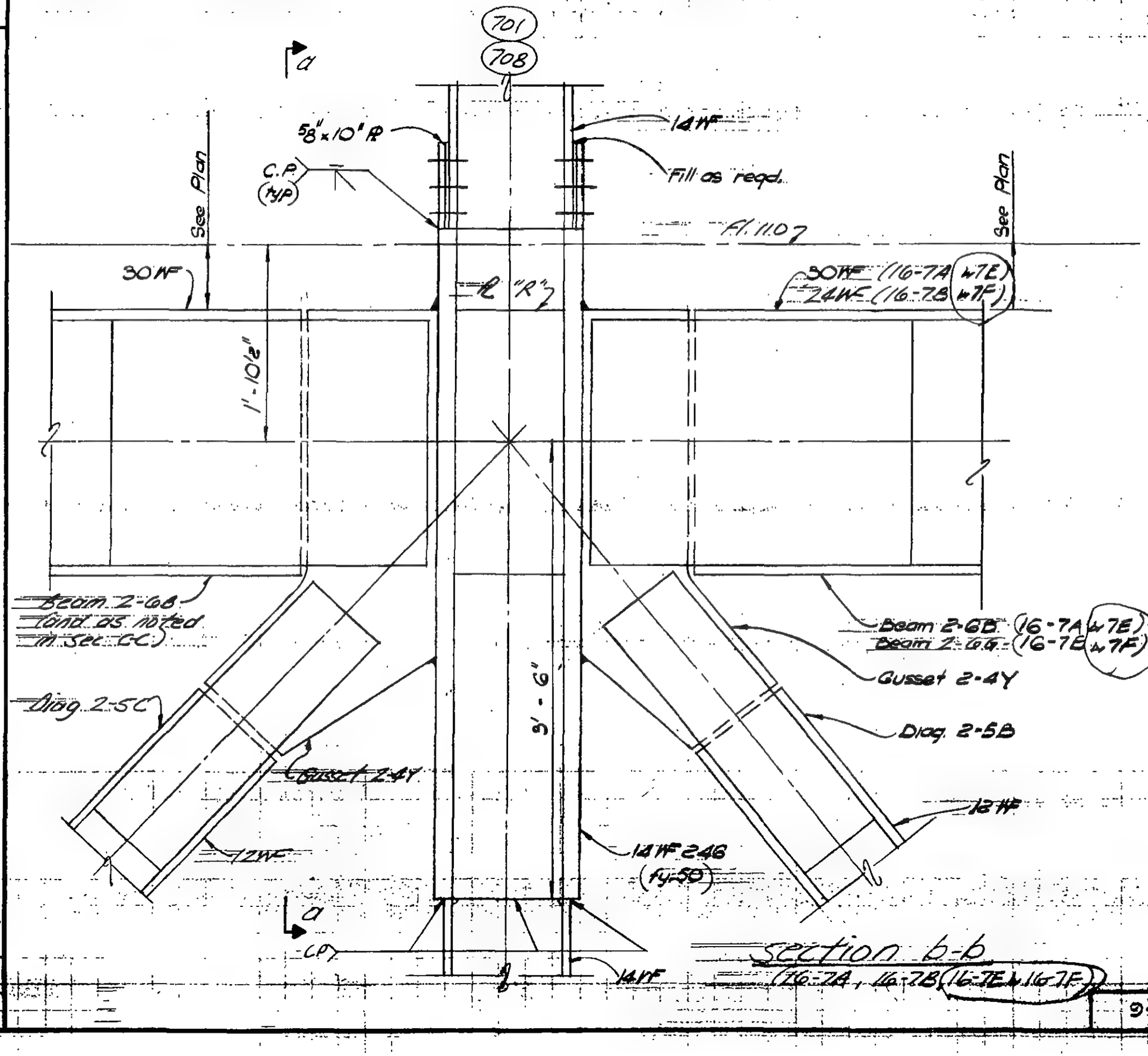

Section b-b

(16-7A, 16-7B, 16-7E & 16-7F)

LICENSED PROFESSIONAL ENGINEER — LESLIE E. ROBERTSON — No. 34360 — UNIVERSITY OF THE STATE OF NEW YORK

DESIGNED: J. Lam

DRAWN: M. Clarke

REVIEWED: E. Dracos

9-AB16-7.2

SKILLING, HELLE, CHRISTIANSEN, ROBERTSON — Structural & Civil Engineers

PROJECT: THE WORLD TRADE CENTER

TITLE: FL 107-PH CONNECTION DETAILS - FL 110

DATE: 4-1-70

REVISIONS
6-18-70
12-14-70

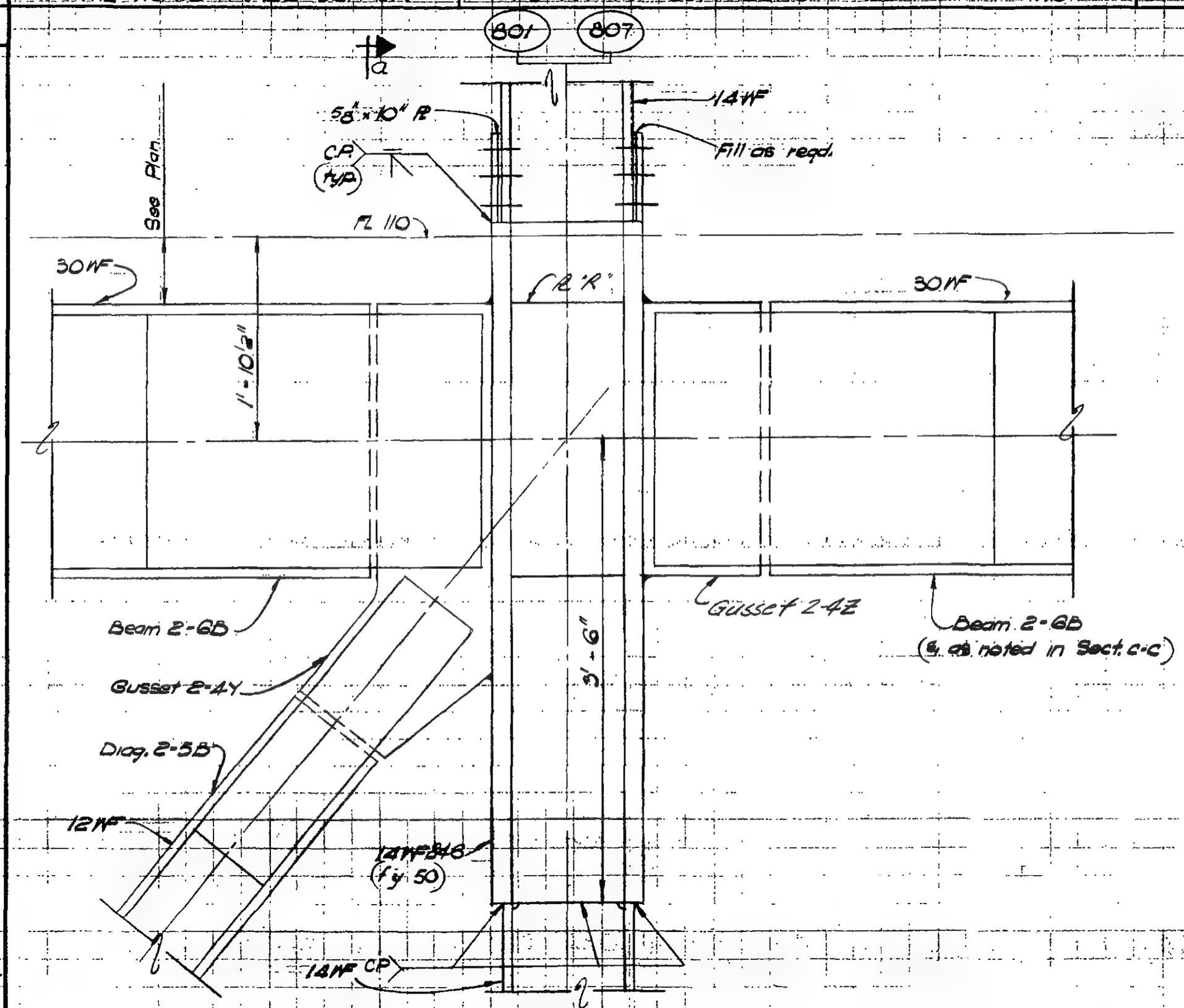

Section b-b
(16-7C, 16-7D, 16-7G & 16-7H)

9-AB18-7.3

LICENSED PROFESSIONAL ENGINEER
LESLIE E. ROBERTSON
No. 34860
UNIVERSITY OF THE STATE OF NEW YORK

DESIGNED: H. Lost
DRAWN: W. Clarke
REVIEWED: E. Draxos

SKILLING, HELLE, CHRISTIANSEN, ROBERTSON — Structural & Civil Engineers

PROJECT: THE WORLD TRADE CENTER | TITLE: FL 107 - PH. CONNECTION DETAILS - FL 110 | DATE: 4-1-70

REVISIONS
6/18/70
12/14/70

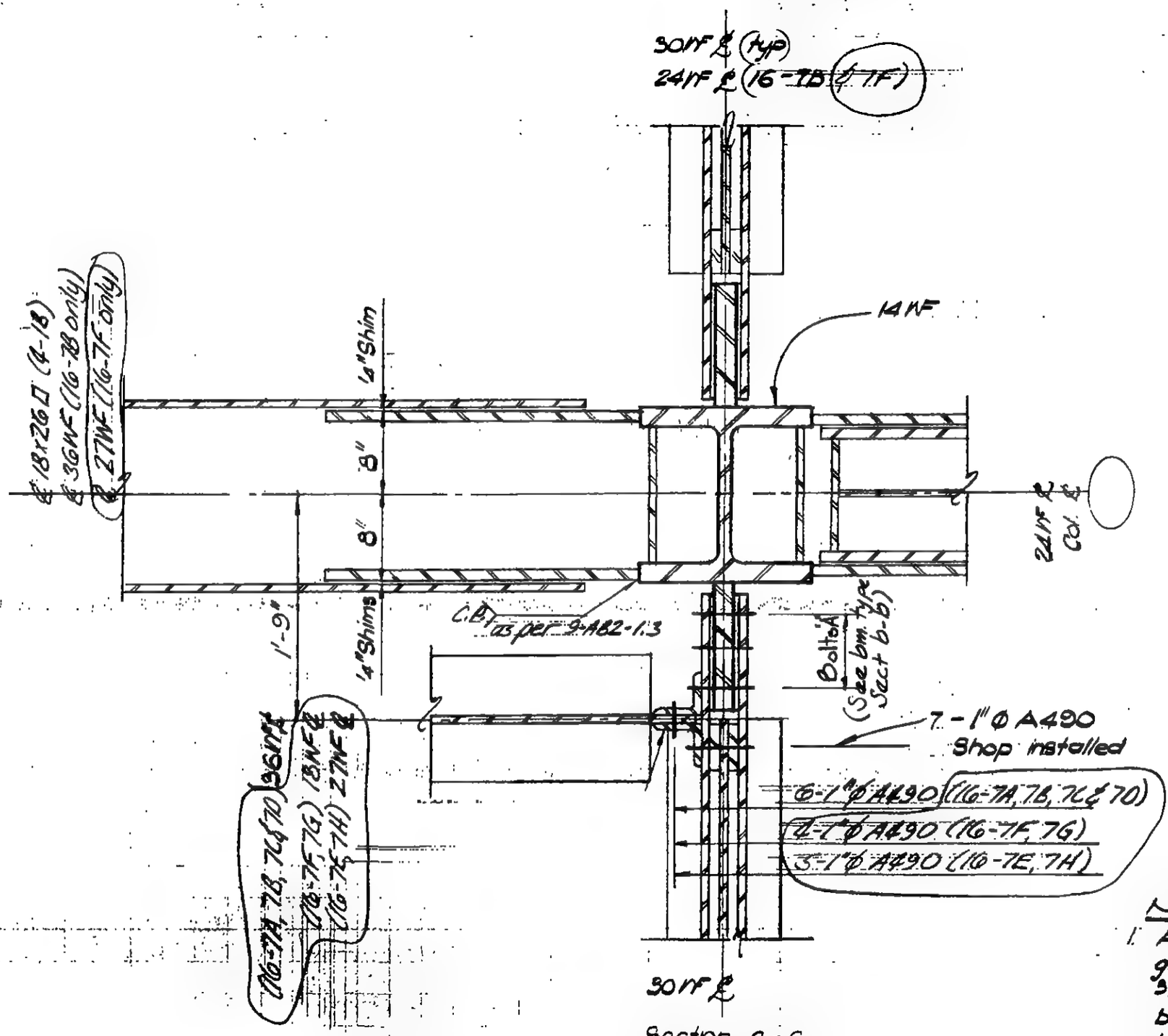

Section C-C

16-7A, 16-7E as shown

16-7B, 16-7F
16-7C, 16-7G
16-7D, 16-7H
similar ℄, as noted

Notes:

1. All PLs designated as gussets shall have holes 3/16" larger than nominal bolt diameter, all other holes shall be 1/16" larger.

LICENSED PROFESSIONAL ENGINEER — LESLIE E. ROBERTSON — No. 84860 — UNIVERSITY OF THE STATE OF NEW YORK

DESIGNED: [signature]
DRAWN: W. Clarke
REVIEWED: E. Drakos

9-AB16-7.4

SKILLING, HELLE, CHRISTIANSEN, ROBERTSON — Structural & Civil Engineers

PROJECT: THE WORLD TRADE CENTER | TITLE: FL 107 PH CONNECTION DETAILS - FL 110 | DATE: 4-1-70

REVISIONS
- 6/16/70
12/14/70

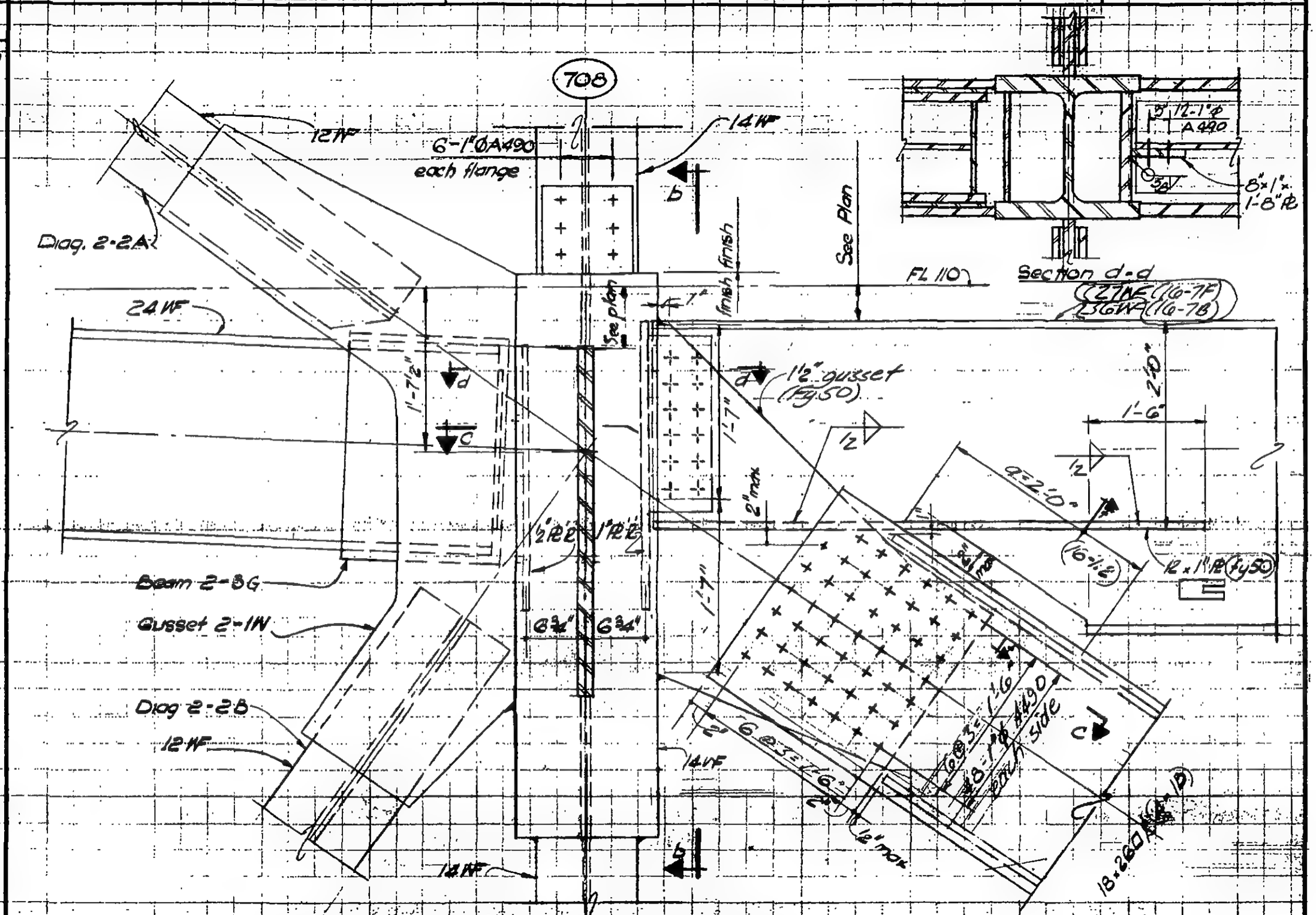

LICENSED PROFESSIONAL ENGINEER — LESLIE E. ROBERTSON — No. 34869 — UNIVERSITY OF THE STATE OF NEW YORK

DESIGNED: Von
DRAWN: N. Clarke
REVIEWED: E. Drakos

0-4616-75

SKILLING, HELLE, CHRISTIANSEN, ROBERTSON — Structural & Civil Engineers

PROJECT: THE WORLD TRADE CENTER | TITLE: FL 107-PH CONNECTION DETAILS - FL 110 | DATE: 6-18-70

REVISIONS

12/14/70

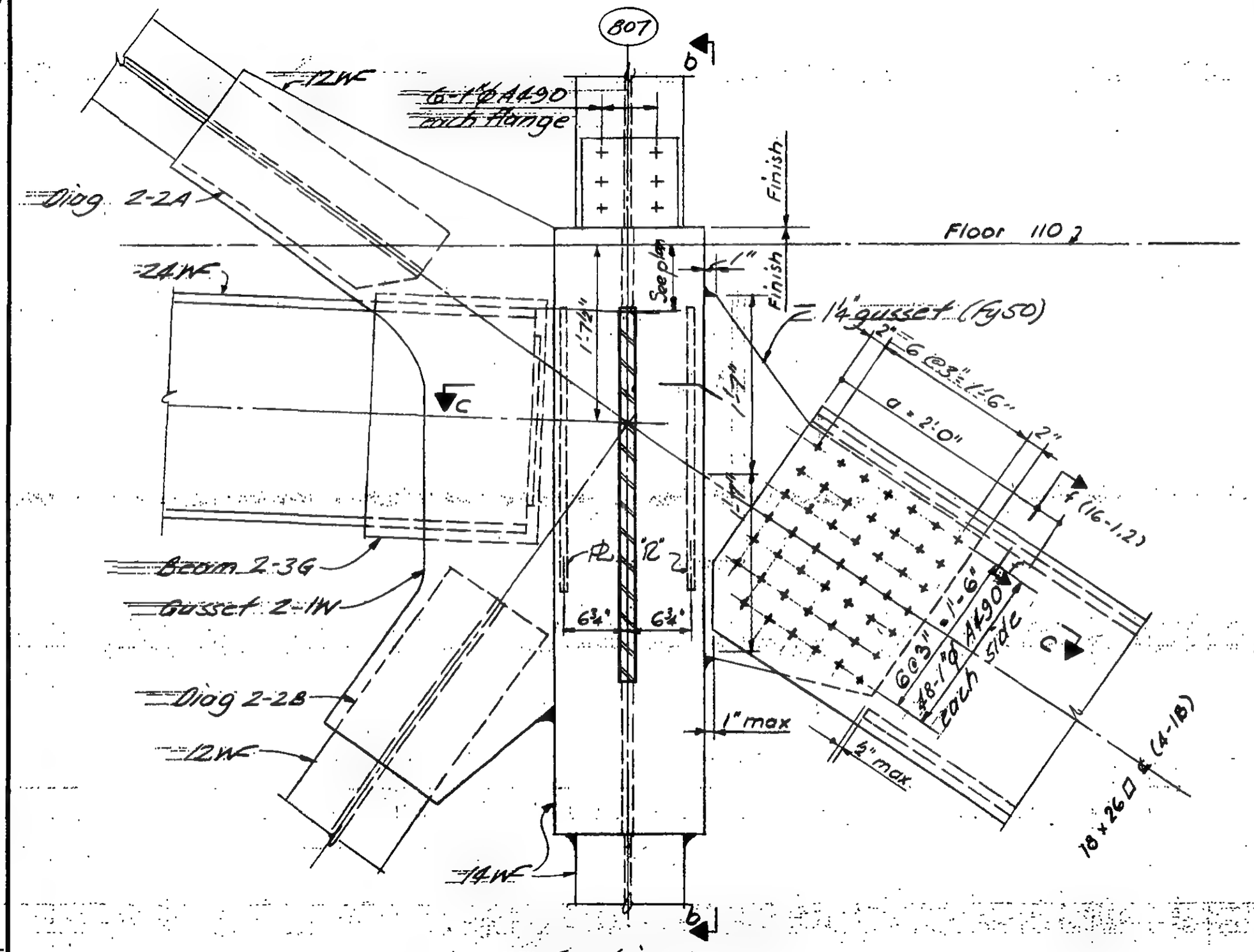

Section a-a

Detail 16-7D (Col 807) Tower A

Detail 16-7H (Col 807) Tower B

9-AB16-7.6

LICENSED PROFESSIONAL ENGINEER LESLIE E. ROBERTSON No. 34360 UNIVERSITY OF THE STATE OF NEW YORK

DESIGNED: H. Von

DRAWN: J. Adams

REVIEWED: E. Drakos

SKILLING, HELLE, CHRISTIANSEN, ROBERTSON — Structural & Civil Engineers

PROJECT: THE WORLD TRADE CENTER | TITLE: Fl. 107 PH CONNECTION DETAILS - Fl. 110 | DATE: 4-1-70

REVISIONS

6-15-70

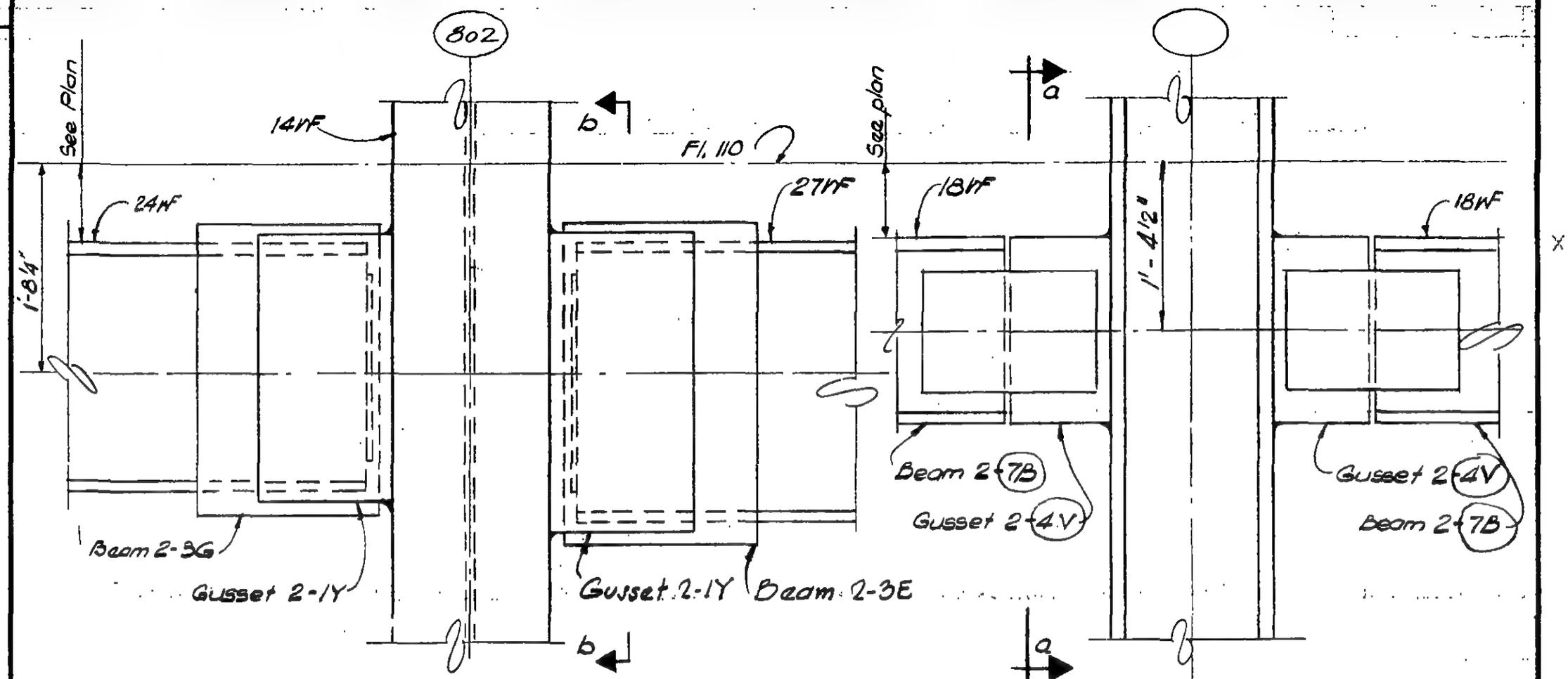

Section a-a

Section b-b

DETAIL 16-8A

LICENSED PROFESSIONAL ENGINEER — LESLIE E. ROBERTSON — No. 34360 — UNIVERSITY OF THE STATE OF NEW YORK

DESIGNED: Patel

DRAWN: D. Huggins

REVIEWED: E. Drakos

9-AB 16-8.1

SKILLING, HELLE, CHRISTIANSEN, ROBERTSON — Structural & Civil Engineers

PROJECT: THE WORLD TRADE CENTER | TITLE: Fl. 107 - PH CONNECTION DETAIL - FL 110 | DATE: 4-1-70

REVISIONS
6-15-70

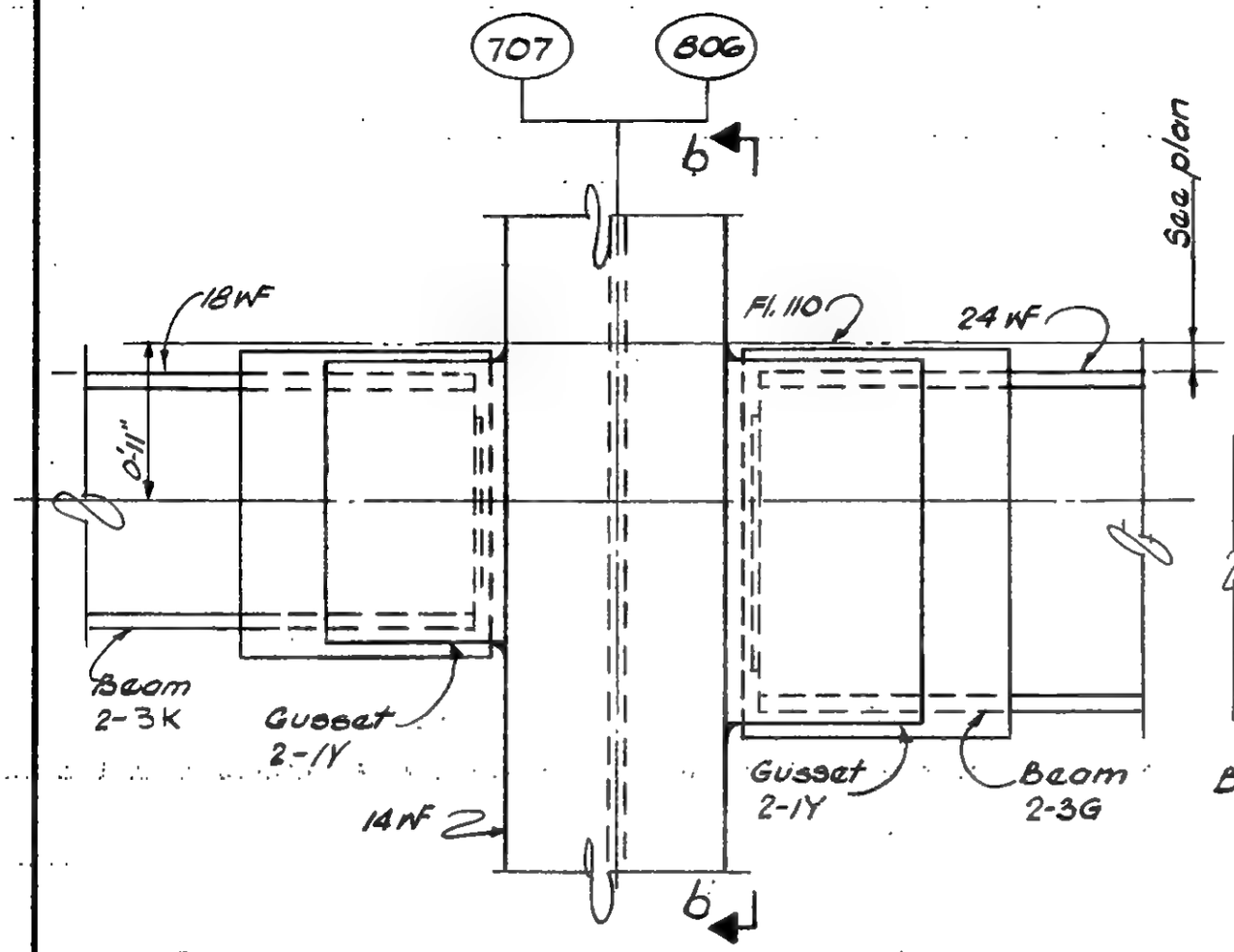

Section a-a

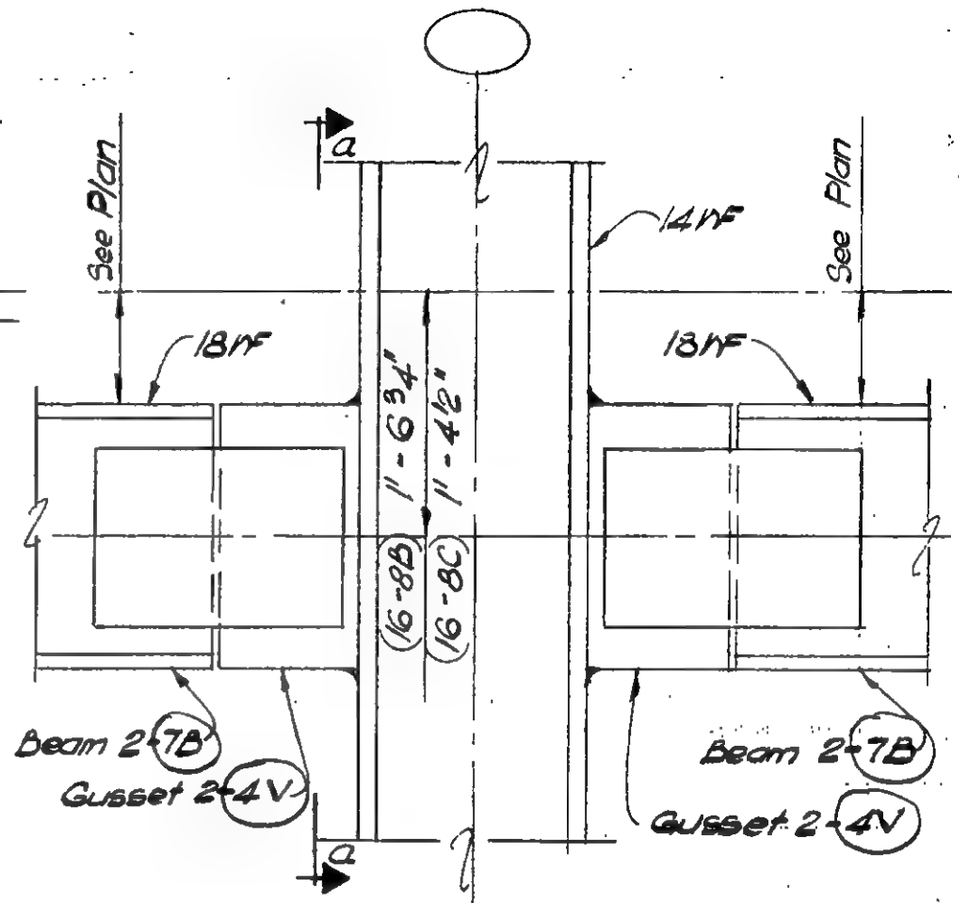

Section b-b

DETAIL 16-8B (Col. 707)
DETAIL 16-8C (Col. 806)

LICENSED PROFESSIONAL ENGINEER — LESLIE E. ROBERTSON — No. 34960 — UNIVERSITY OF THE STATE OF NEW YORK

DESIGNED: I. Potal
DRAWN: D. Huggins
REVIEWED: E. Drakos

9AB16-8C

SKILLING, HELLE, CHRISTIANSEN, ROBERTSON — Structural & Civil Engineers

PROJECT: THE WORLD TRADE CENTER

TITLE: FL 107 - PH CONNECTION DETAILS - FL 110

DATE: 4 - 1 - 70

REVISIONS

6 - 15 - 70

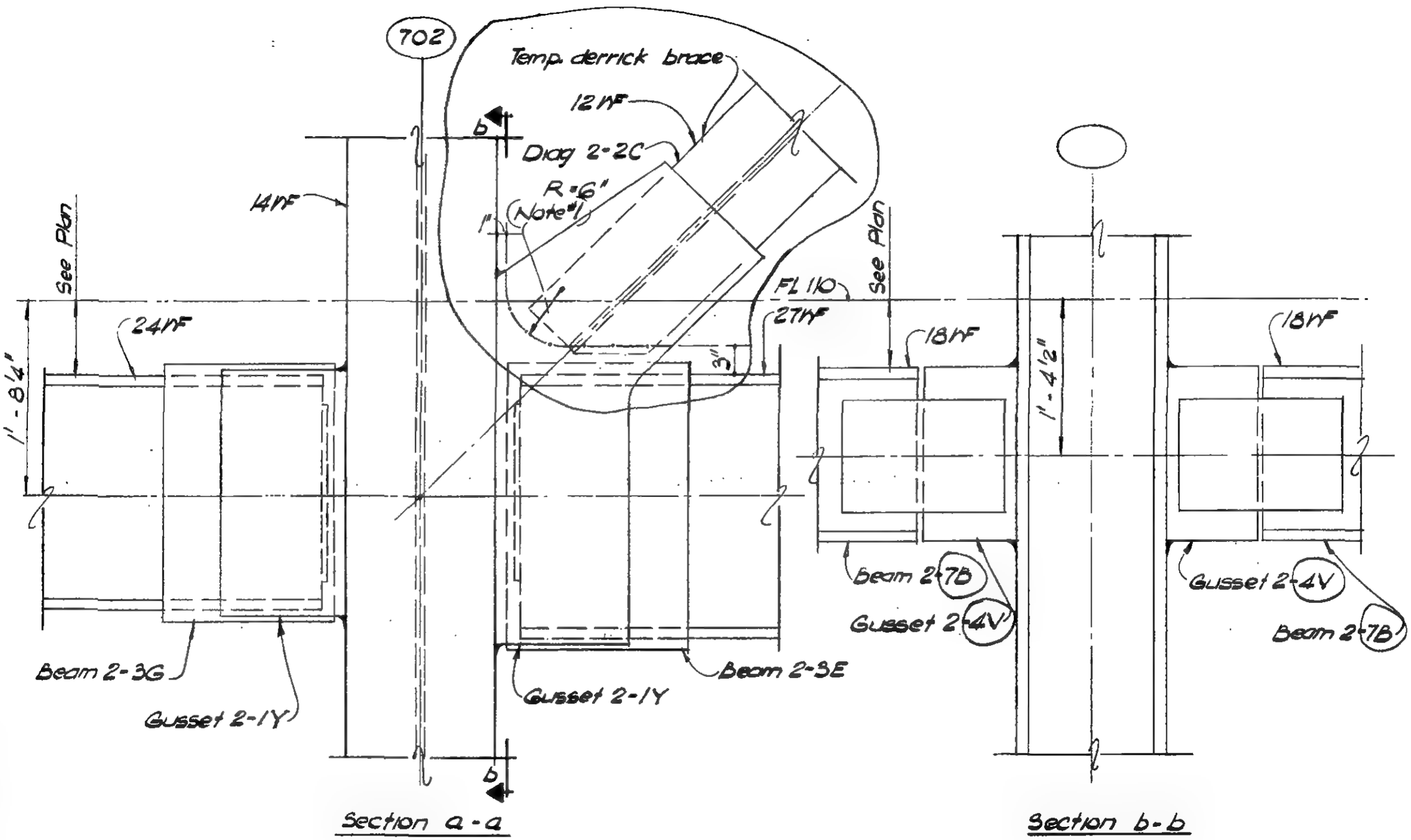

Section a-a

Section b-b

DETAIL 16-8D

Notes:

1. —·—·— Indicates smooth notch-free gusset 12 cut (ASA 250), following removal of temporary derrick brace.

LICENSED PROFESSIONAL ENGINEER — LESLIE E. ROBERTSON — No 34360 — UNIVERSITY OF THE STATE OF NEW YORK

DESIGNED

DRAWN: W. Clarke

REVIEWED: E. Dracos

9 - AB16 - 8.3

SKILLING, HELLE, CHRISTIANSEN, ROBERTSON — Structural & Civil Engineers

PROJECT: THE WORLD TRADE CENTER | TITLE: FLOOR 107-PH CONNECTION DETAIL EL 110 | DATE: 4-1-70

REVISIONS

6-15-70

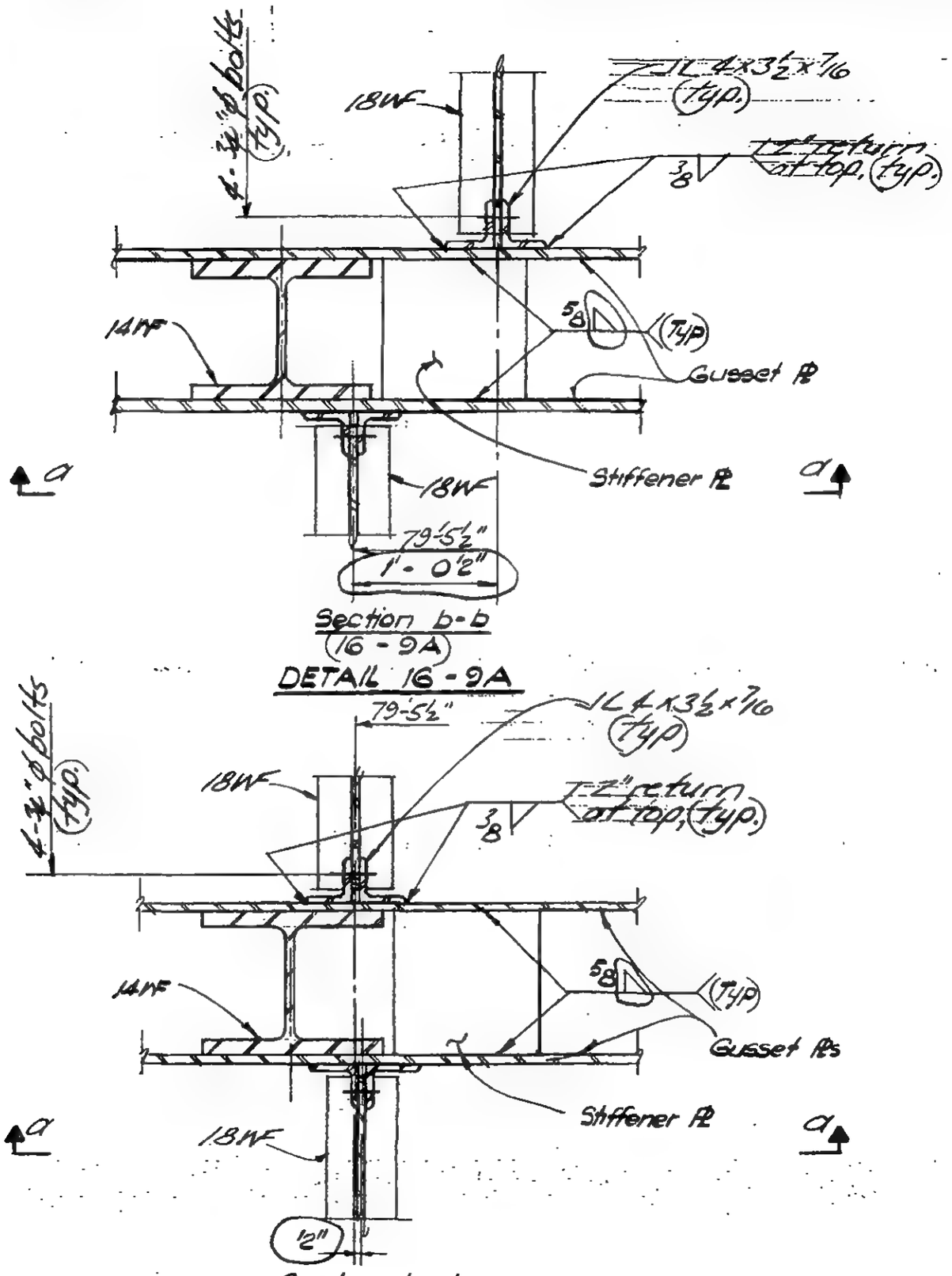

Section b-b
(16-9A)

DETAIL 16-9A

Section b-b
(16-9B)

DETAIL 16-9B

LICENSED PROFESSIONAL ENGINEER — LESLIE E. ROBERTSON — No. 34860 — UNIVERSITY OF THE STATE OF NEW YORK

DESIGNED: K. HWANG

DRAWN: N. Clarke

REVIEWED: E. Drakos

9548A16-9.1

SKILLING, HELLE, CHRISTIANSEN, ROBERTSON — Structural & Civil Engineers

PROJECT: THE WORLD TRADE CENTER | TITLE: FLOOR 107-PH CONNECTION DETAIL - FL 110 | DATE: 4-1-70

REVISIONS

6-15-70

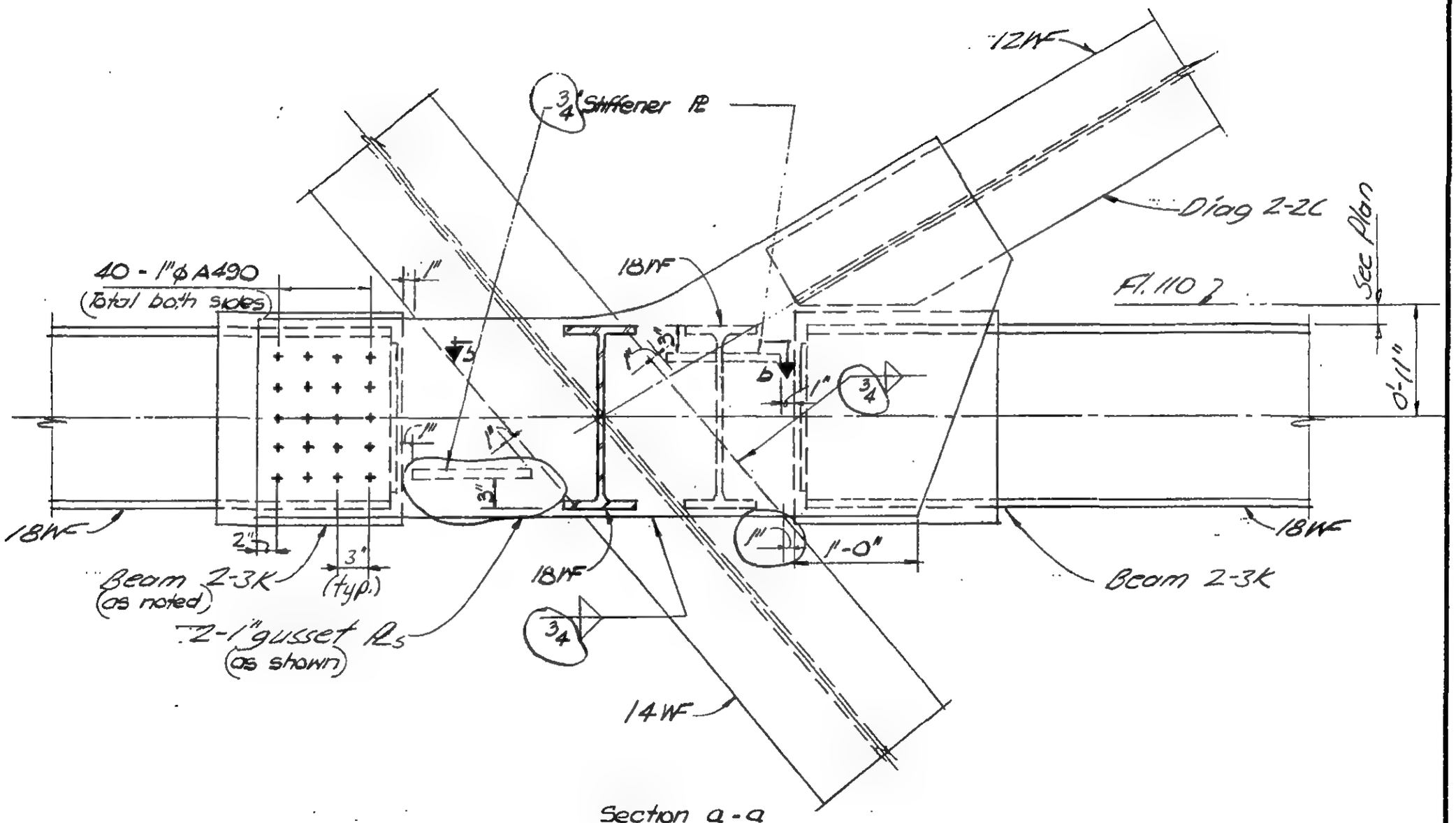

Section a-a

DETAIL 16-9A (as shown)
DETAIL 16-9B (similar)

LICENSED PROFESSIONAL ENGINEER — LESLIE E. ROBERTSON — No. 34960 — UNIVERSITY OF THE STATE OF NEW YORK

DESIGNED: K. HWANG
DRAWN: W. Clarke
REVIEWED: E. Draxos

9-AB16-9.2

SKILLING, HELLE, CHRISTIANSEN, ROBERTSON — Structural & Civil Engineers

PROJECT THE WORLD TRADE CENTER | TITLE FL 107 - PH CONNECTION DETAILS - FL 110 | DATE 4 - 1 - 70

REVISIONS

6 - 15 - 70

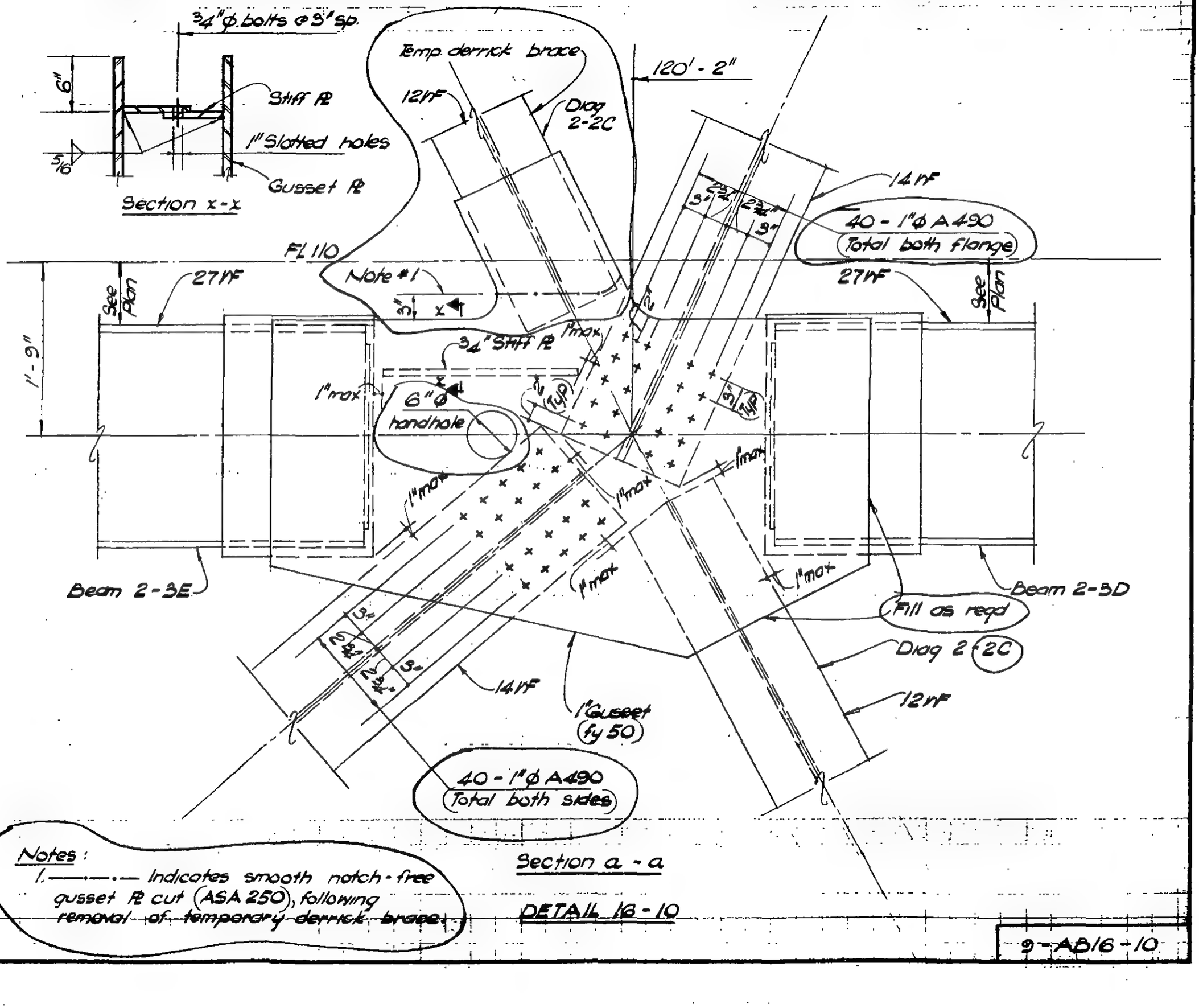

Notes:

1. —·—·— Indicates smooth notch-free gusset Pl cut (ASA 250), following removal of temporary derrick brace.

DETAIL 16-10

LICENSED PROFESSIONAL ENGINEER — LESLIE E. ROBERTSON — No. 34560 — UNIVERSITY OF THE STATE OF NEW YORK

DESIGNED

DRAWN N. Clarke

REVIEWED E. Drakos

9-AB16-10

SKILLING, HELLE, CHRISTIANSEN, ROBERTSON — Structural & Civil Engineers

PROJECT THE WORLD TRADE CENTER | TITLE Fl. 107-PH CONNECTION DETAILS - FL 110 | DATE 4-1-70

REVISIONS

6-15-70

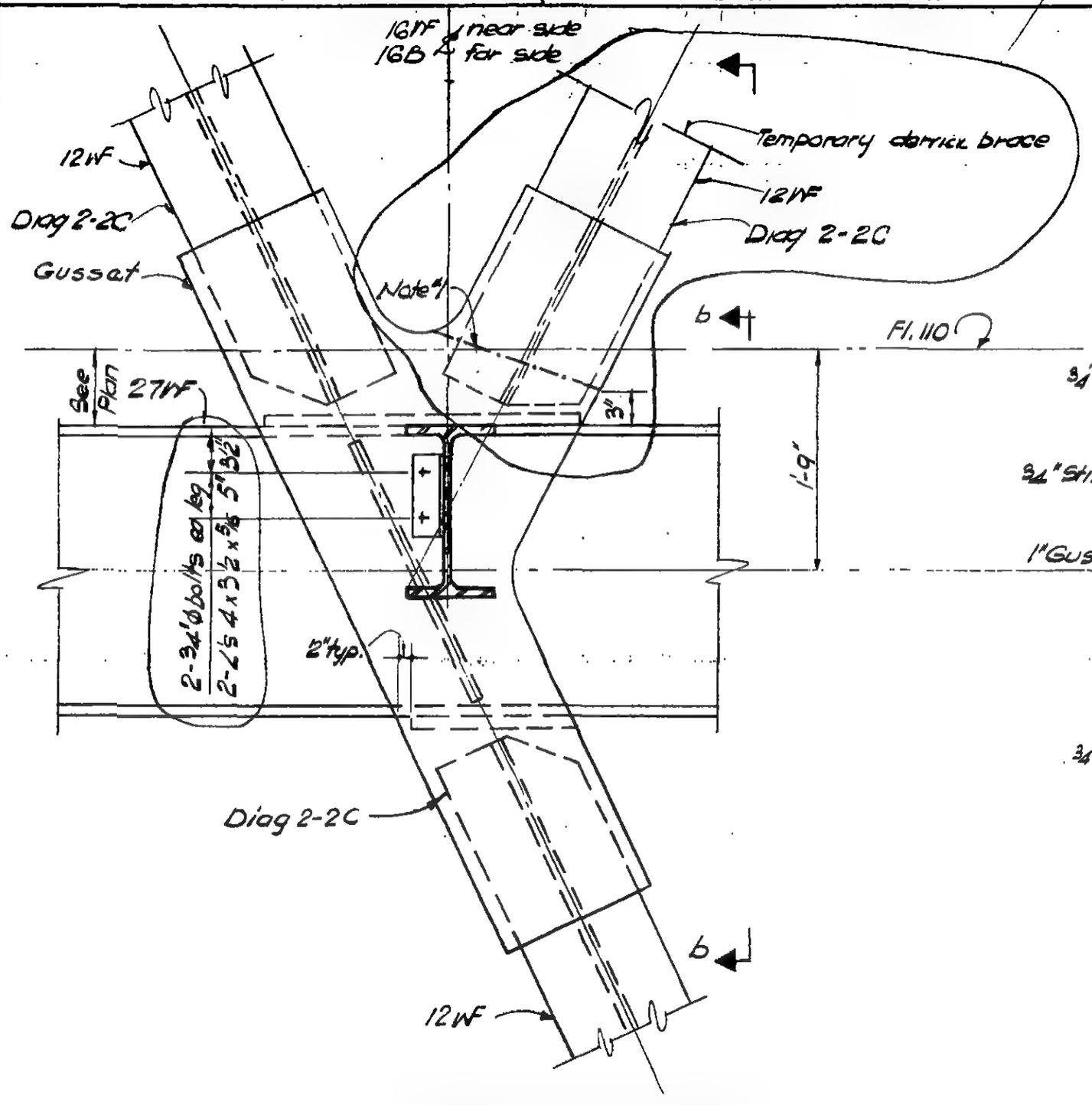

Section a-a

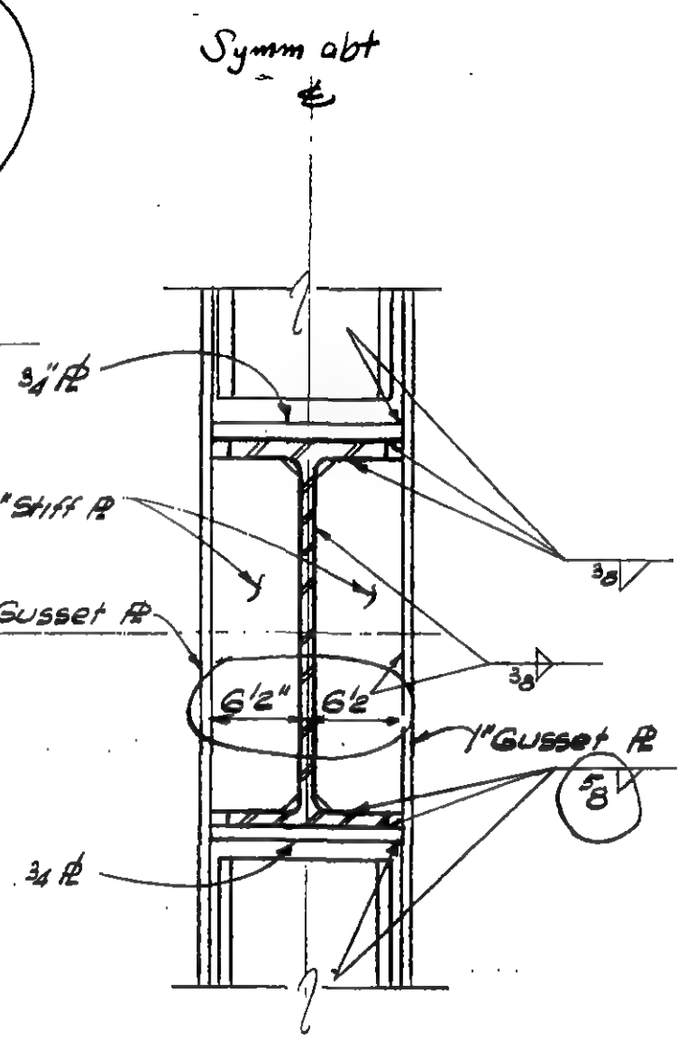

Section b-b

Notes:

1. —·—·— Indicates smooth notch-free gusset PL cut (ASA 250), following removal of temporary derrick brace.

DESIGNED H. Czajkowski

DRAWN D. Huggins

REVIEWED E. Drakos

LICENSED PROFESSIONAL ENGINEER LESLIE E. ROBERTSON No 34360 UNIVERSITY OF THE STATE OF NEW YORK

DETAIL 16-11

9-AB-16-11

SKILLING, HELLE, CHRISTIANSEN, ROBERTSON — Structural & Civil Engineers

PROJECT THE WORLD TRADE CENTER | TITLE Fl. 107 - PH CONNECTION DETAILS - Fl. 110 | DATE 4-1-70

REVISIONS

6-15-70
12-14-70

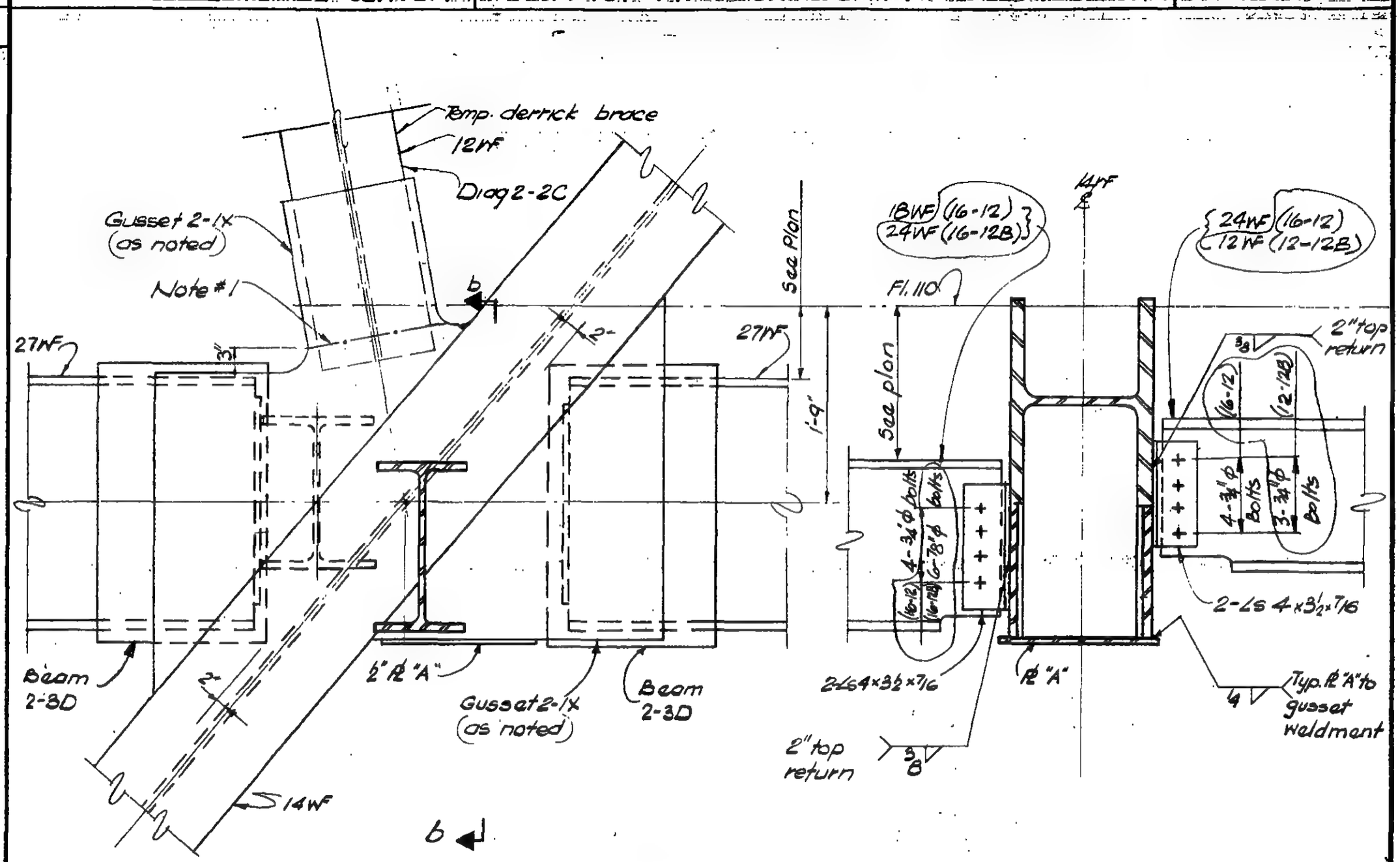

Section a-a

Section b-b

DETAIL 16-12
DETAIL 16-12B as noted

Notes:
1. —·—·— Indicates smooth notch-free gusset ℄ cut (ASA 250), following removal of temporary derrick brace.

DESIGNED H. Czajkowski
DRAWN D. Huggins
REVIEWED E. Drakos

9-AB 16-12

SKILLING, HELLE, CHRISTIANSEN, ROBERTSON — Structural & Civil Engineers

PROJECT THE WORLD TRADE CENTER | TITLE Fl. 107-PH CONNECTION DETAILS-PH Roof | DATE 4-1-70

REVISIONS

6/18/70
VOID ~~9/25/70~~
6/18/70

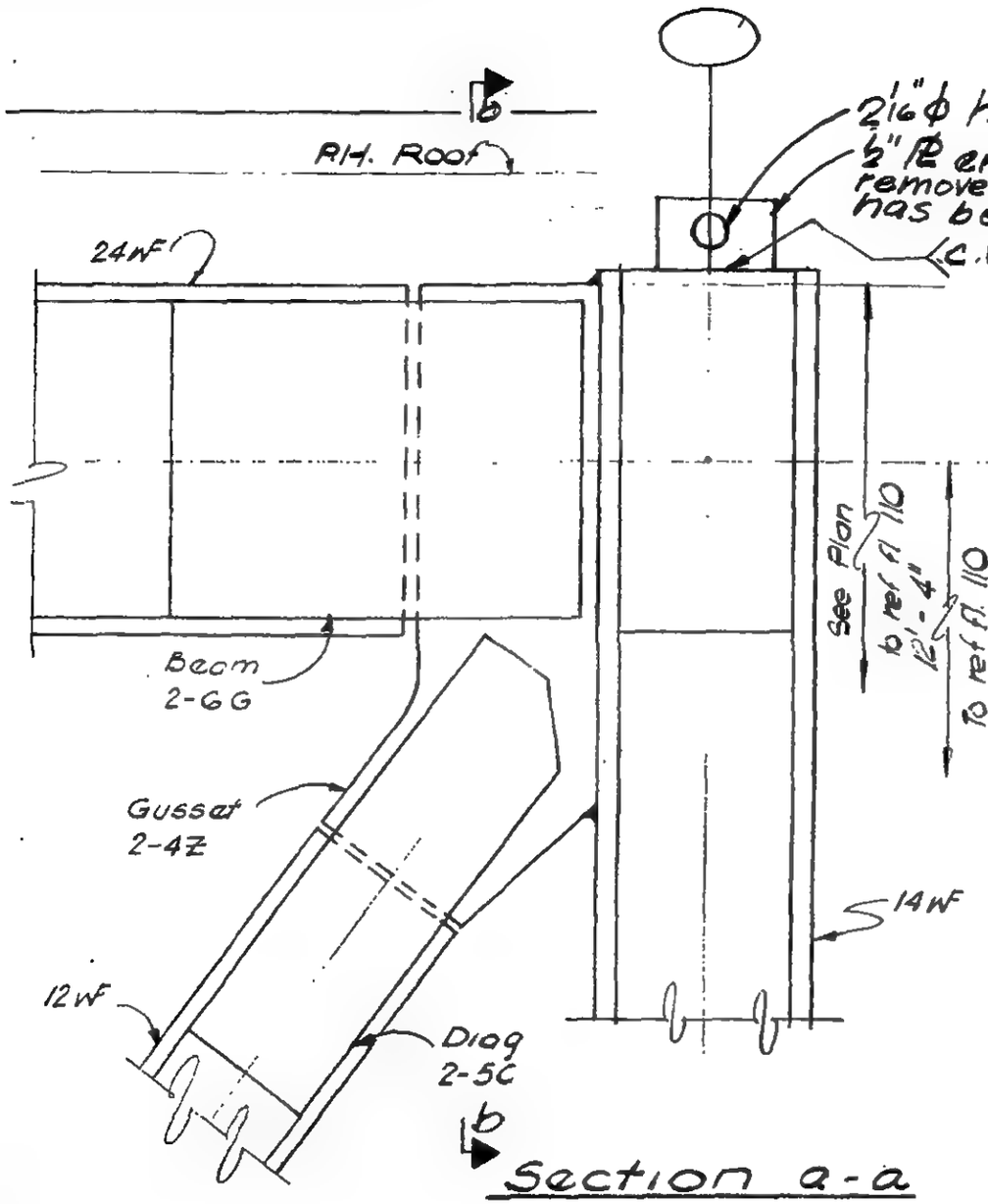

Section a-a

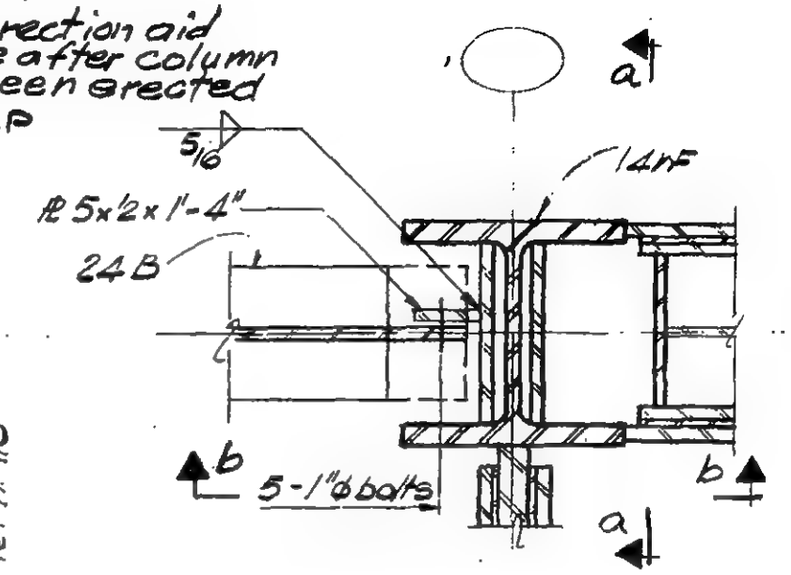

Section c-c

DETAIL 17-1A, 17-1B, 17-1C

LICENSED PROFESSIONAL ENGINEER
LESLIE E. ROBERTSON
No. 34360
UNIVERSITY OF THE STATE OF NEW YORK

DESIGNED A. Patel
DRAWN D. Huggins
REVIEWED E. Drakos

9-AB 17-1.1

SKILLING, HELLE, CHRISTIANSEN, ROBERTSON — Structural & Civil Engineers

PROJECT THE WORLD TRADE CENTER | TITLE FL 107 - PH CONNECTION DETAILS - PH ROOF | DATE 4 - 1 - 70

REVISIONS

6/18/70

Void ~~9/25/70~~ 6/18/70

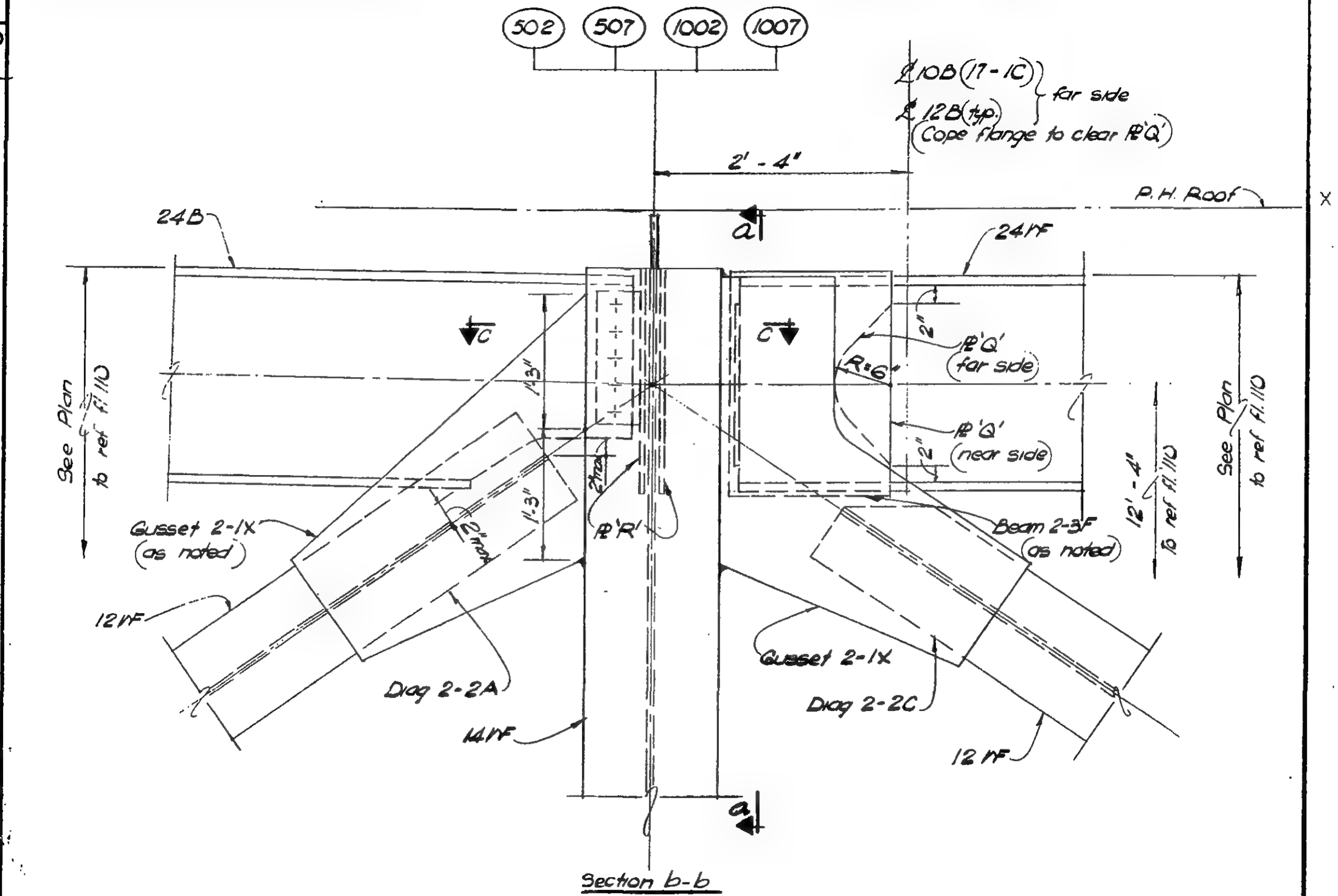

Section b-b

DETAIL 17-1A (Col. 502 as shown)
DETAIL 17-1B (Cols. 1002 & 1007) } similar & as noted
DETAIL 17-1C (Col. 507)

9-AB17-1.2

LICENSED PROFESSIONAL ENGINEER — LESLIE E. ROBERTSON — No. 34360 — UNIVERSITY OF THE STATE OF NEW YORK

DESIGNED K. HWANG

DRAWN M. Clarke

REVIEWED E. Drakos

SKILLING, HELLE, CHRISTIANSEN, ROBERTSON — Structural & Civil Engineers

PROJECT THE WORLD TRADE CENTER | TITLE FL 107 - PH CONNECTION DETAILS - PH ROOF | DATE 12/14/70

REVISIONS

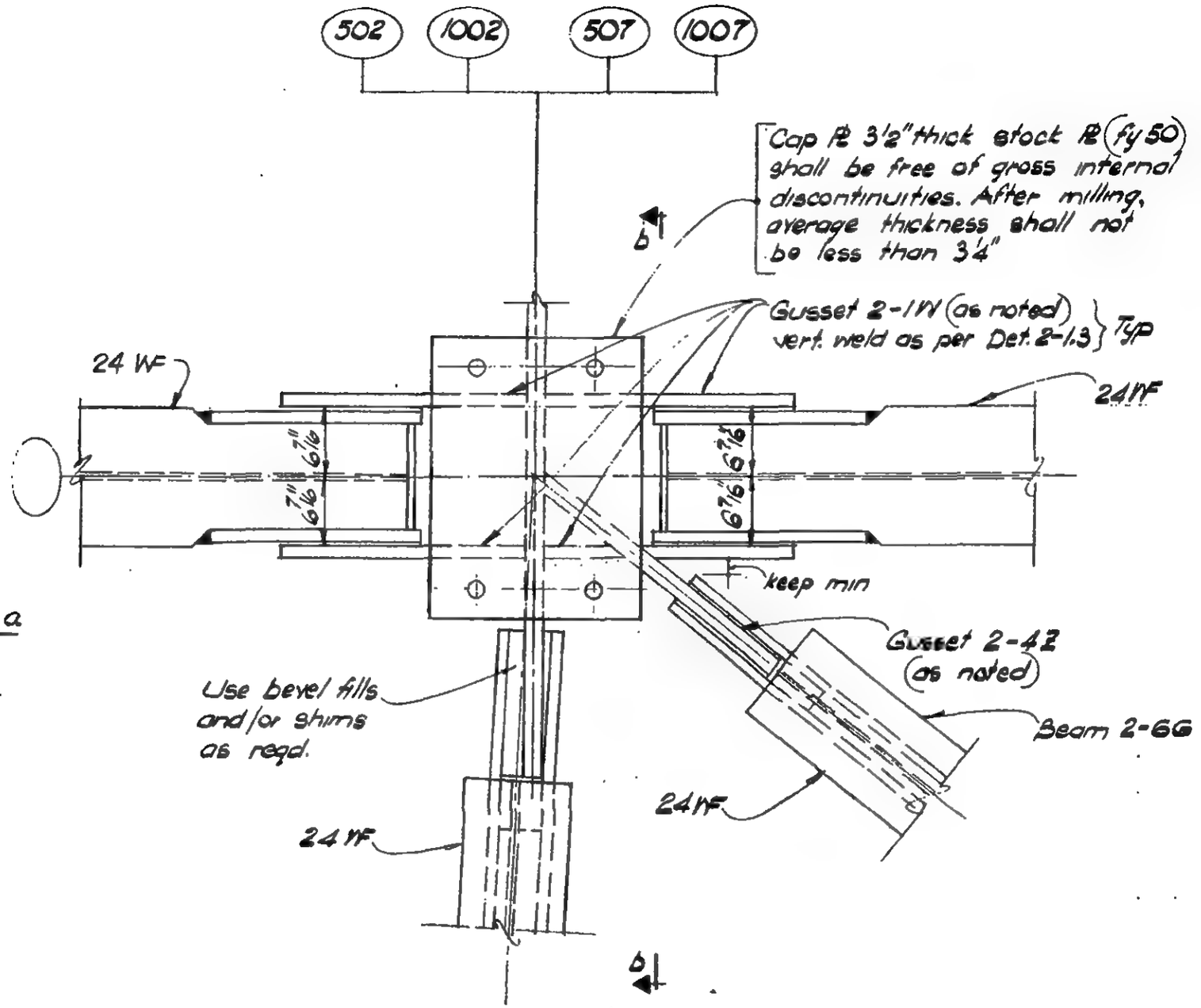

PLAN

DETAIL 17-1D (Col. 502 as shown)
DETAIL 17-1E (Col. 1002) } similar and as noted
DETAIL 17-1F (Col. 507) } similar and as noted
DETAIL 17-1G (Col. 1007) } similar and as noted

LICENSED PROFESSIONAL ENGINEER — LESLIE E. ROBERTSON — No. 34360 — UNIVERSITY OF THE STATE OF NEW YORK

DESIGNED

DRAWN W. Clarke

REVIEWED

9-B17-1.3

SKILLING, HELLE, CHRISTIANSEN, ROBERTSON — Structural & Civil Engineers

PROJECT THE WORLD TRADE CENTER | TITLE FL 107 - PH CONNECTION DETAILS - PH ROOF | DATE 12/14/70

REVISIONS

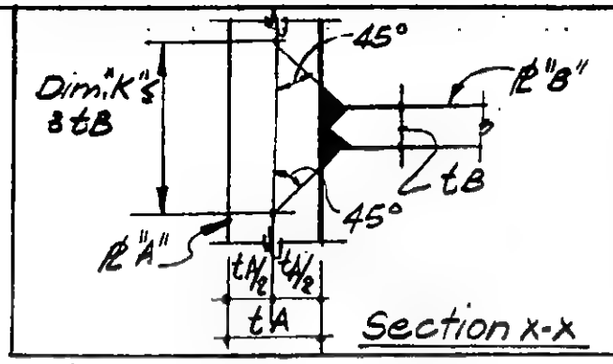

Volume of ℄ "A" = Dim. "K" x depth of C.P. weld, shall be free from gross internal discontinuities when tested in accordance with ASTM A435.

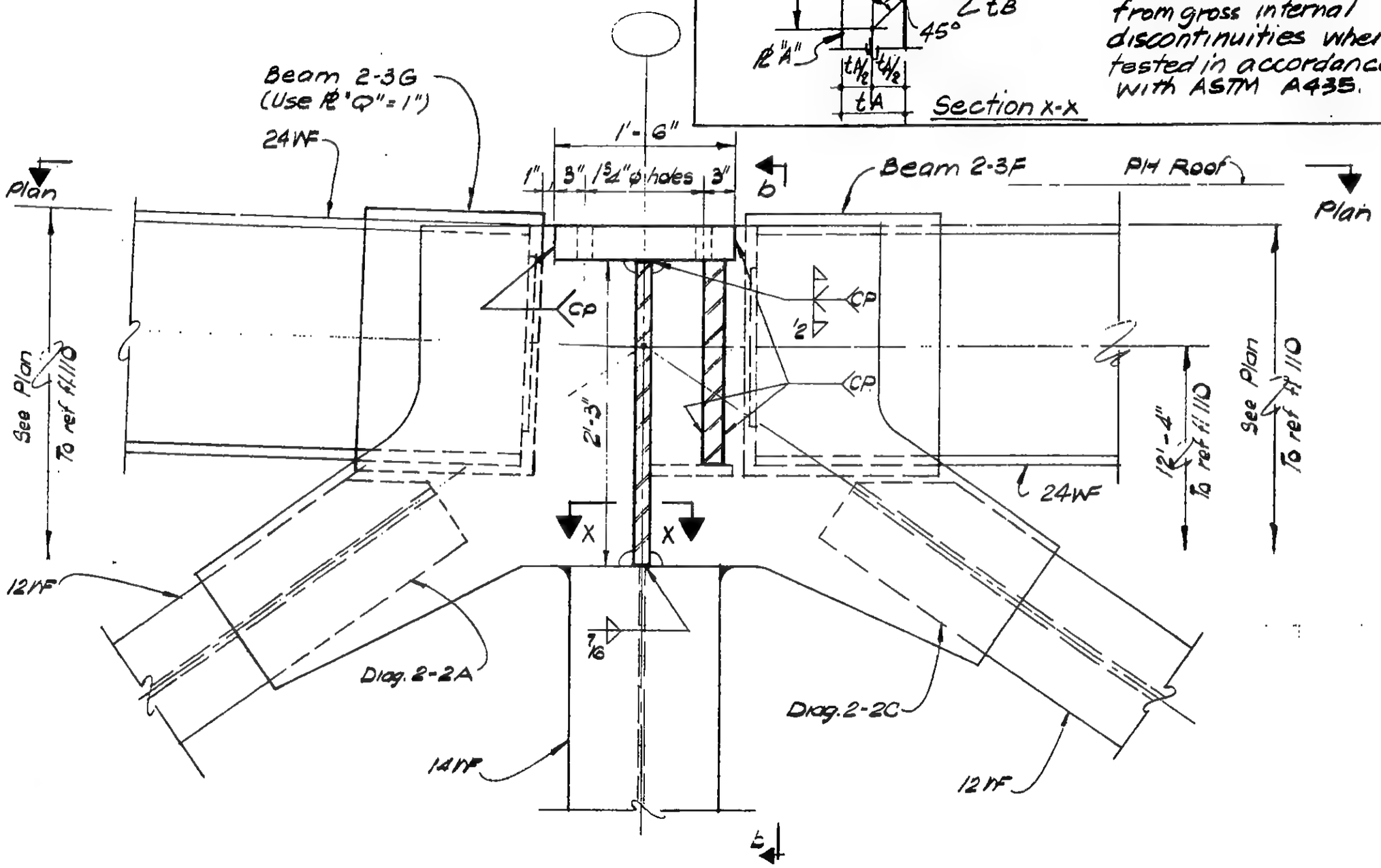

LICENSED PROFESSIONAL ENGINEER — LESLIE E. ROBERTSON — No. 34360 — UNIVERSITY OF THE STATE OF NEW YORK

DESIGNED

DRAWN
W. Clarke

REVIEWED

9-B17-1.4

SKILLING, HELLE, CHRISTIANSEN, ROBERTSON — Structural & Civil Engineers

PROJECT: THE WORLD TRADE CENTER | TITLE: FL 107 - PH CONNECTION DETAILS - PH. ROOF | DATE: 12/14/70

REVISIONS

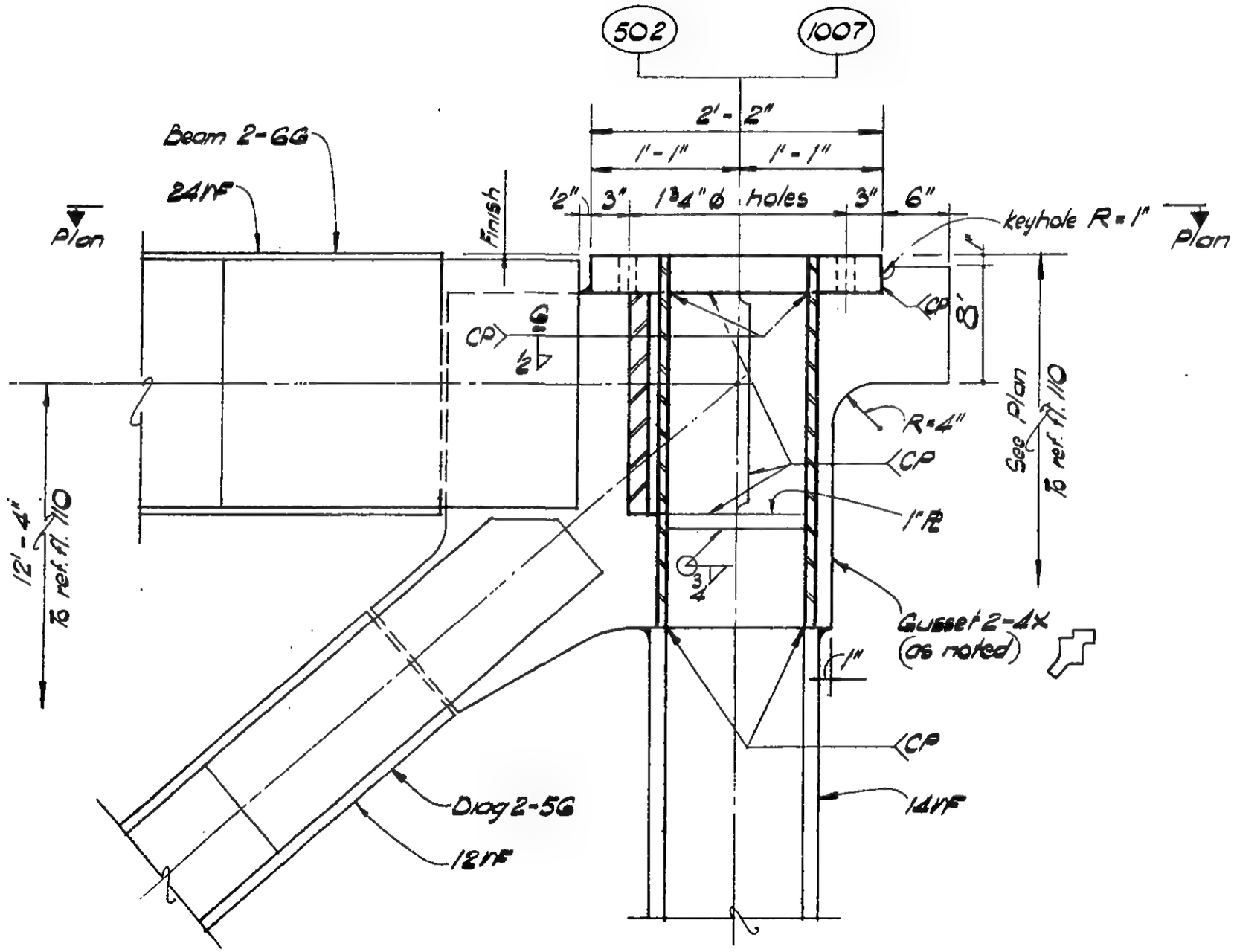

Section b-b

DETAIL 17-1D (Col. 502 as shown)
DETAIL 17-1G (Col. 1007 opp hand)

LICENSED PROFESSIONAL ENGINEER — LESLIE E. ROBERTSON — No. 34560 — UNIVERSITY OF THE STATE OF NEW YORK

DESIGNED

DRAWN: W. Clarke

REVIEWED

9-B17-1.5

SKILLING, HELLE, CHRISTIANSEN, ROBERTSON — Structural & Civil Engineers

PROJECT THE WORLD TRADE CENTER | TITLE FL 107 - PH CONNECTION DETAILS - PH ROOF | DATE 12/14/70

REVISIONS

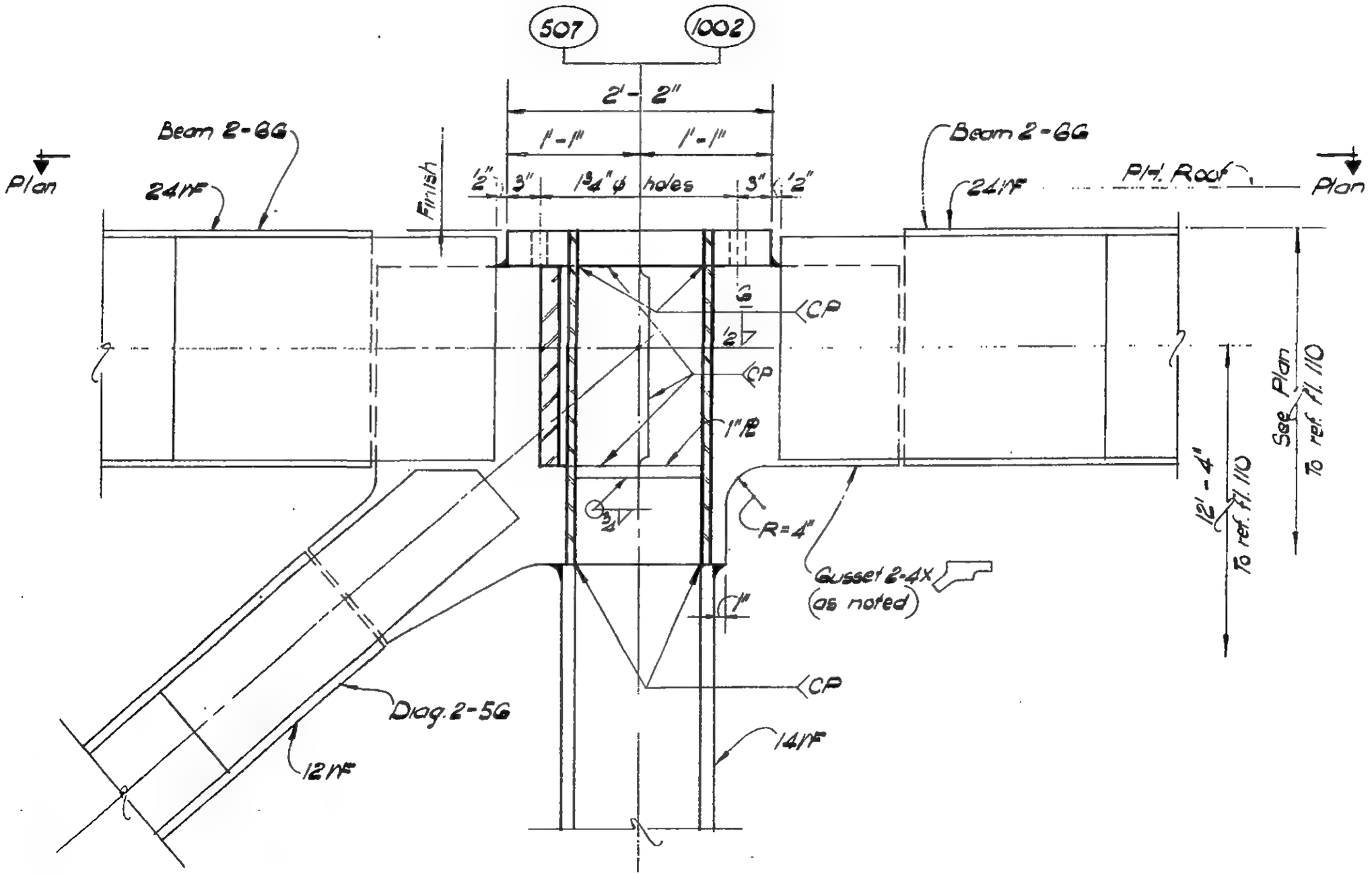

Section b-b

DETAIL 17-1F (Col. 507 as shown)
DETAIL 17-1E (Col. 1002 opp. hand)

LICENSED PROFESSIONAL ENGINEER — LESLIE E. ROBERTSON — No 34260 — UNIVERSITY OF THE STATE OF NEW YORK

DESIGNED

DRAWN W. Clarke

REVIEWED

9-B17-1.6

SKILLING, HELLE, CHRISTIANSEN, ROBERTSON — Structural & Civil Engineers

PROJECT THE WORLD TRADE CENTER | TITLE Fl. 107-PH CONNECTION DETAILS-PH ROOF | DATE 4-1-70

REVISIONS

6/18/70

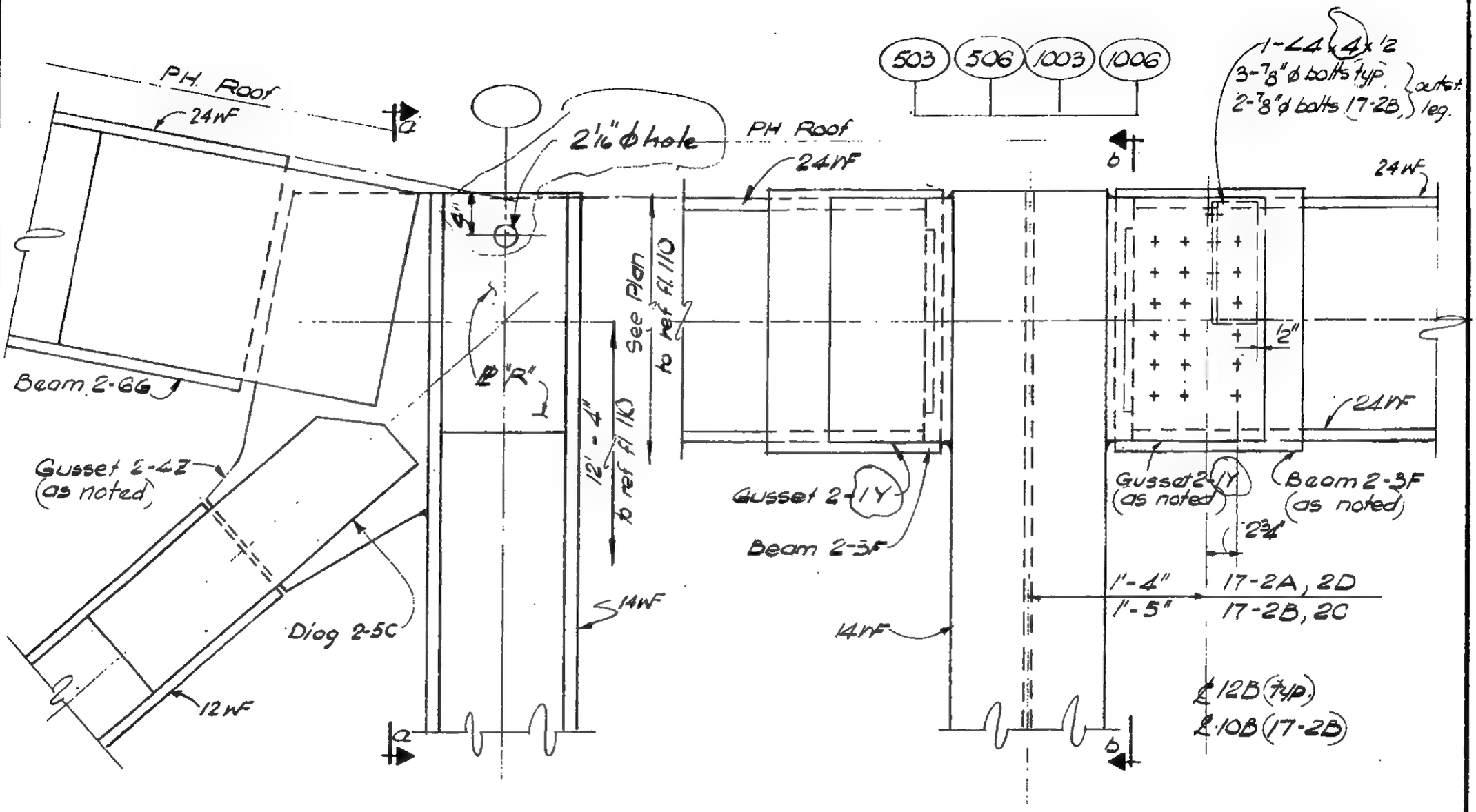

Section b-b

Section a-a

DETAIL 17-2A (Col 503 as shown)
DETAIL 17-2B Col 506
DETAIL 17-2C Col 1003
DETAIL 17-2D Col 1006
} Similar ℄, as noted

DESIGNED A. Patel
DRAWN D. Huggins
REVIEWED E. Dracos

9-AB 17-2.1

SKILLING, HELLE, CHRISTIANSEN, ROBERTSON — Structural & Civil Engineers

PROJECT THE WORLD TRADE CENTER | TITLE FL 107 - PH CONNECTION DETAILS - PH ROOF | DATE 12/14/70

REVISIONS

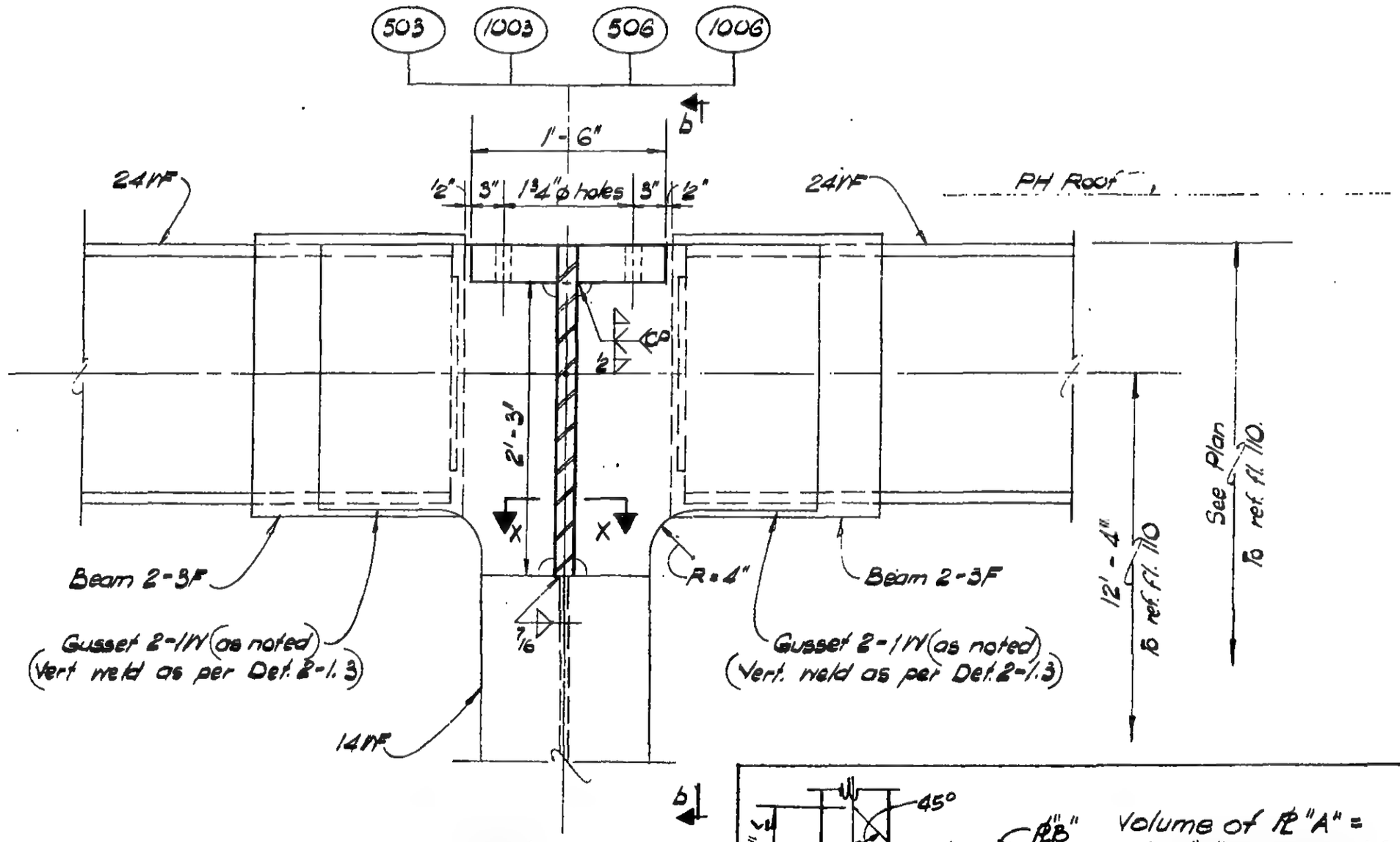

Section a-a

DETAIL 17-2E

(Col 503 as shown)

(Cols. 1003, 506, 1006 similar)

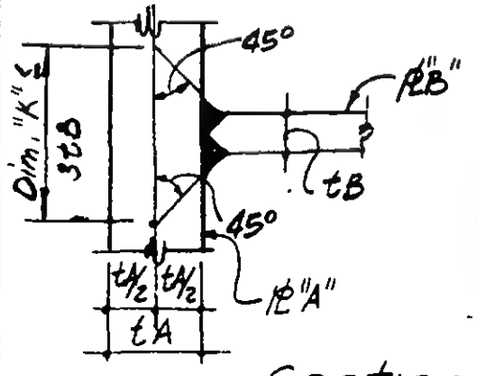

Section x-x

Volume of ℄ "A" = Dim. "k" x depth of C.P. weld, shall be free from gross internal discontinuities when tested in accordance with ASTM A435.

9 - B17 - 2.2

LICENSED PROFESSIONAL ENGINEER — LESLIE E. ROBERTSON — No. 34960 — UNIVERSITY OF THE STATE OF NEW YORK

DESIGNED

DRAWN W. Clarke

REVIEWED

SKILLING, HELLE, CHRISTIANSEN, ROBERTSON — Structural & Civil Engineers

PROJECT THE WORLD TRADE CENTER | TITLE FL 107 - PH CONNECTION DETAILS - PH. ROOF | DATE 12/14/70

REVISIONS

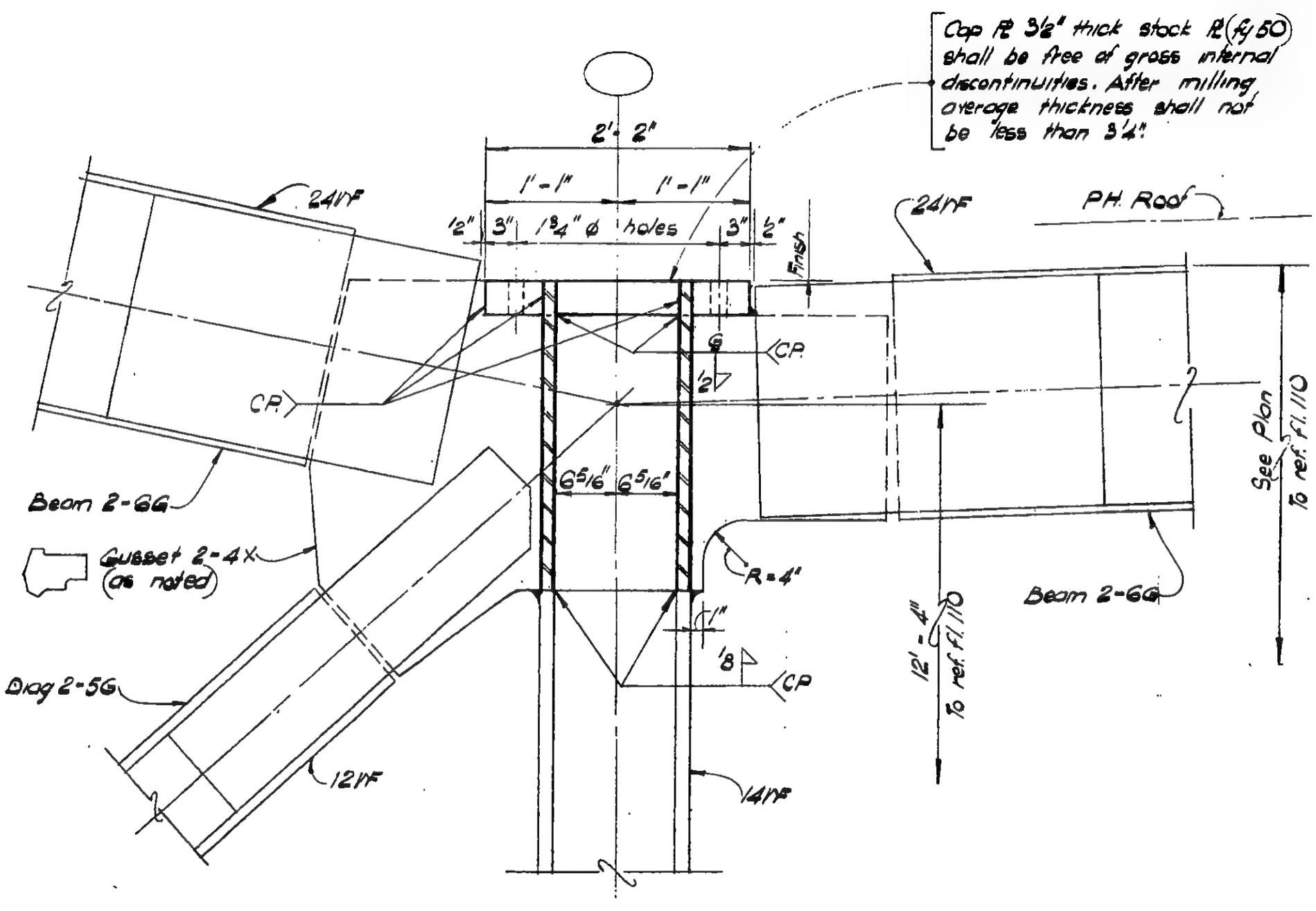

Section b-b

LICENSED PROFESSIONAL ENGINEER — LESLIE E. ROBERTSON — No. 34360 — UNIVERSITY OF THE STATE OF NEW YORK

DESIGNED

DRAWN W. Clarke

REVIEWED

9-B17-2.3

SKILLING, HELLE, CHRISTIANSEN, ROBERTSON — Structural & Civil Engineers

PROJECT THE WORLD TRADE CENTER | TITLE FL.107-PH CONNECTION DETAILS - PH ROOF | DATE 4-1-70

REVISIONS

7-10-70

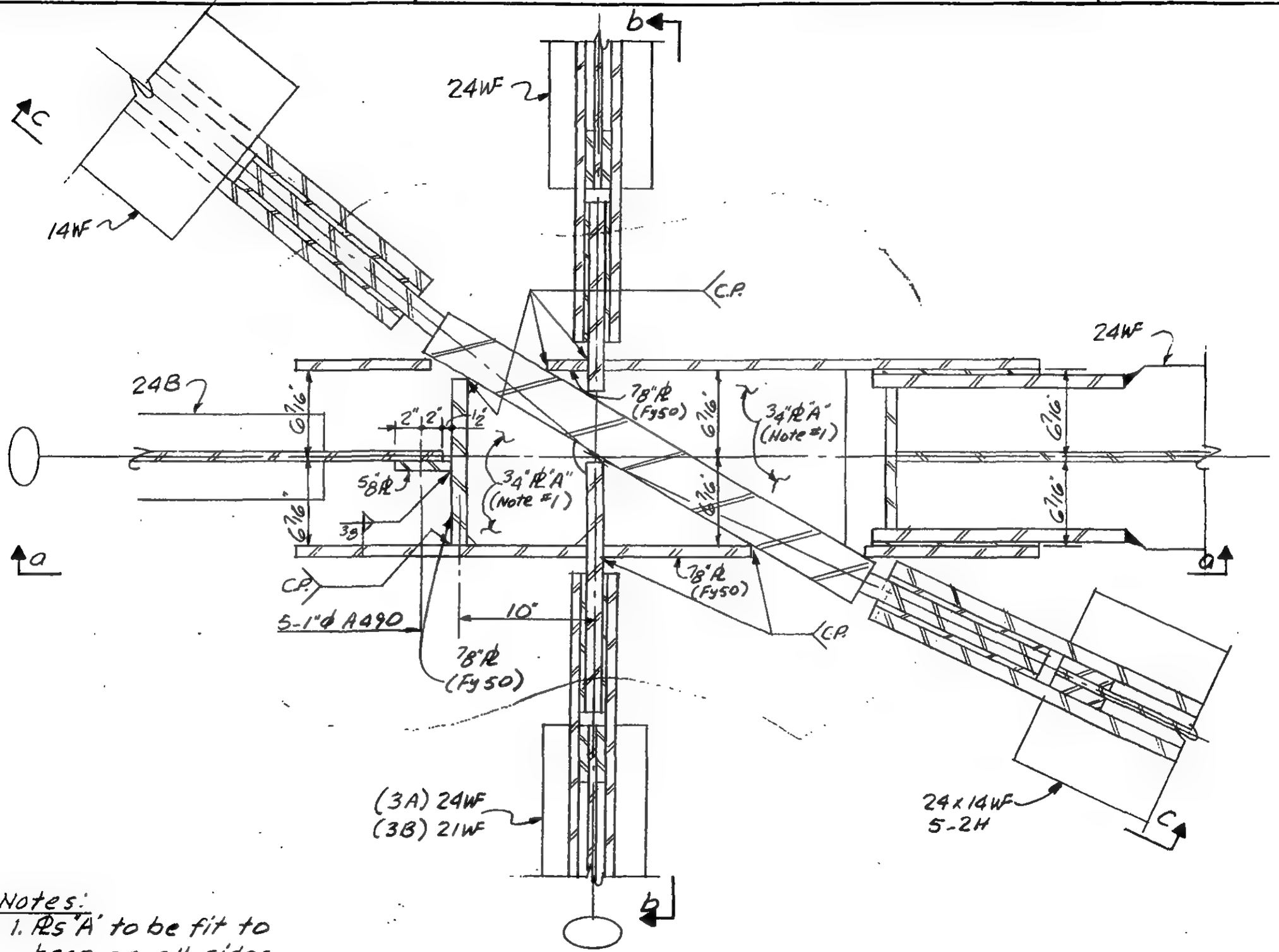

Notes:
1. Rs 'A' to be fit to bear on all sides.

PLAN

DETAIL 17-3A (Col 602 as shown. Cols 902 & 907 similar & as noted)

DETAIL 17-3B (Col 607 similar & as noted)

LICENSED PROFESSIONAL ENGINEER — LESLIE E. ROBERTSON — No. 34360 — UNIVERSITY OF THE STATE OF NEW YORK

DESIGNED

DRAWN A.FRANQUI

REVIEWED E. Drakos

9-AB17-3.1

SKILLING, HELLE, CHRISTIANSEN, ROBERTSON — Structural & Civil Engineers

PROJECT: THE WORLD TRADE CENTER | TITLE: FL 107-PH CONNECTION DETAILS - PH. ROOF | DATE: 4-1-70

REVISIONS

7-10-70

Void ~~7-25-70~~

7-10-70

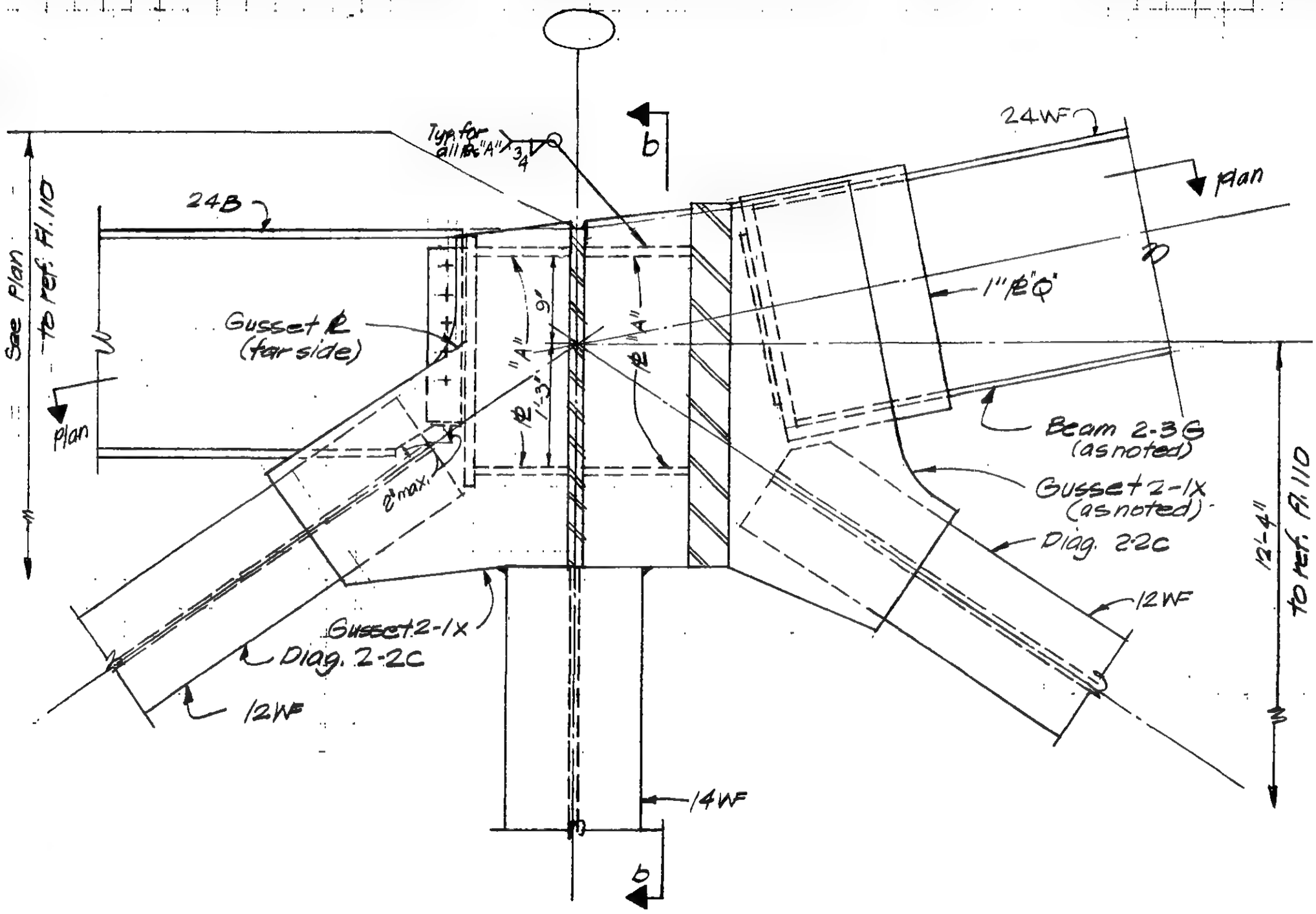

Section a-a

LICENSED PROFESSIONAL ENGINEER — LESLIE E. ROBERTSON — No. 34360 — UNIVERSITY OF THE STATE OF NEW YORK

DESIGNED

DRAWN R. Ozaki

REVIEWED E. Orakos

9-AB17-3.2

SKILLING, HELLE, CHRISTIANSEN, ROBERTSON — Structural & Civil Engineers

PROJECT: THE WORLD TRADE CENTER | TITLE: FL 107 - PH CONNECTION DETAILS - PH ROOF | DATE: 4-1-70

REVISIONS

7-10-70

Void ~~9-25-70~~

7-10-70

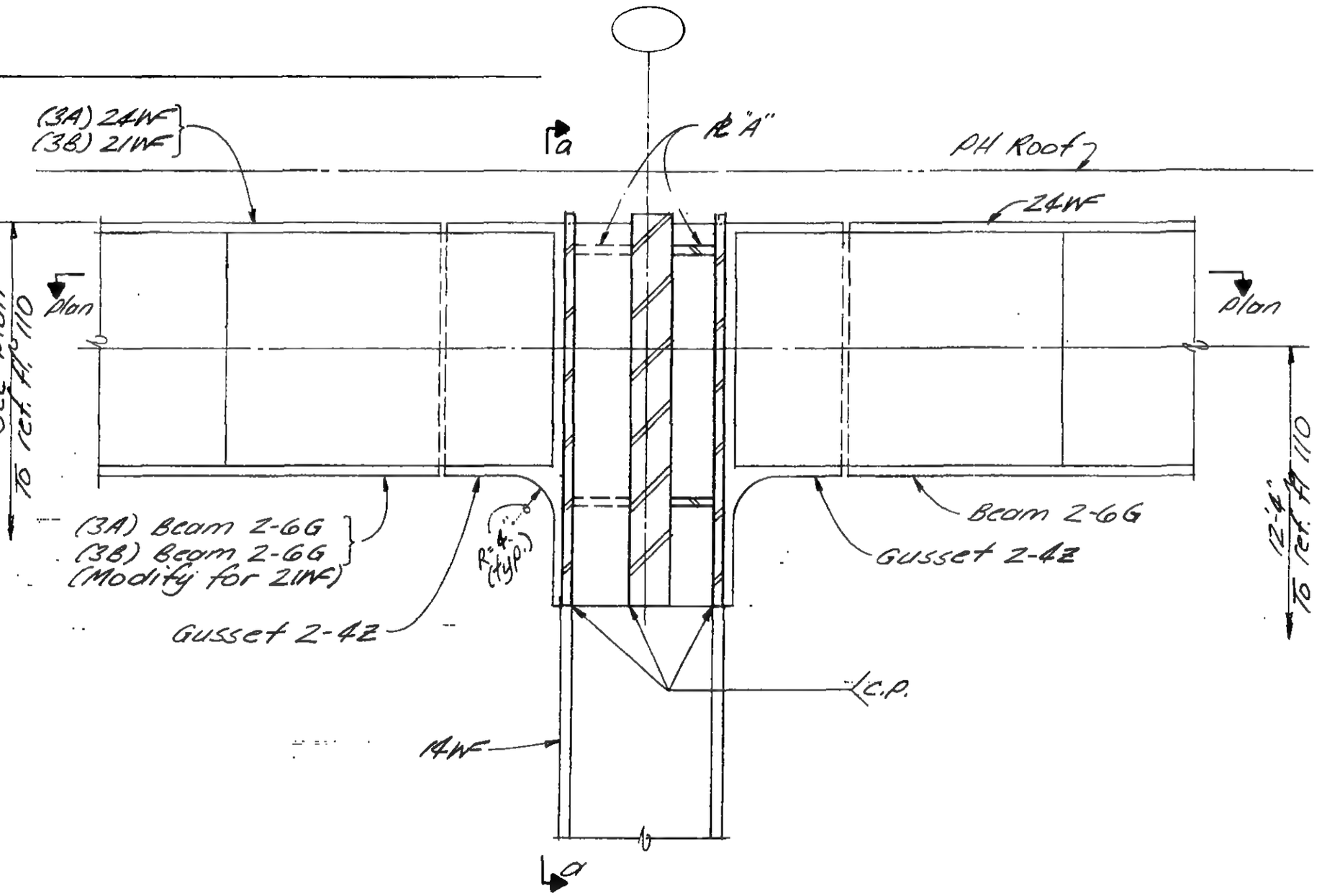

Section b-b

DESIGNED

DRAWN J. Adams

REVIEWED E. Drakos

9-AB17-3.3

SKILLING, HELLE, CHRISTIANSEN, ROBERTSON — Structural & Civil Engineers

PROJECT: THE WORLD TRADE CENTER | TITLE: FLOOR - PH CONNECTION DETAILS - PH ROOF | DATE: 4-1-70

REVISIONS

VOID ~~7/10/70~~ ~~7/23/70~~ 7/10/70

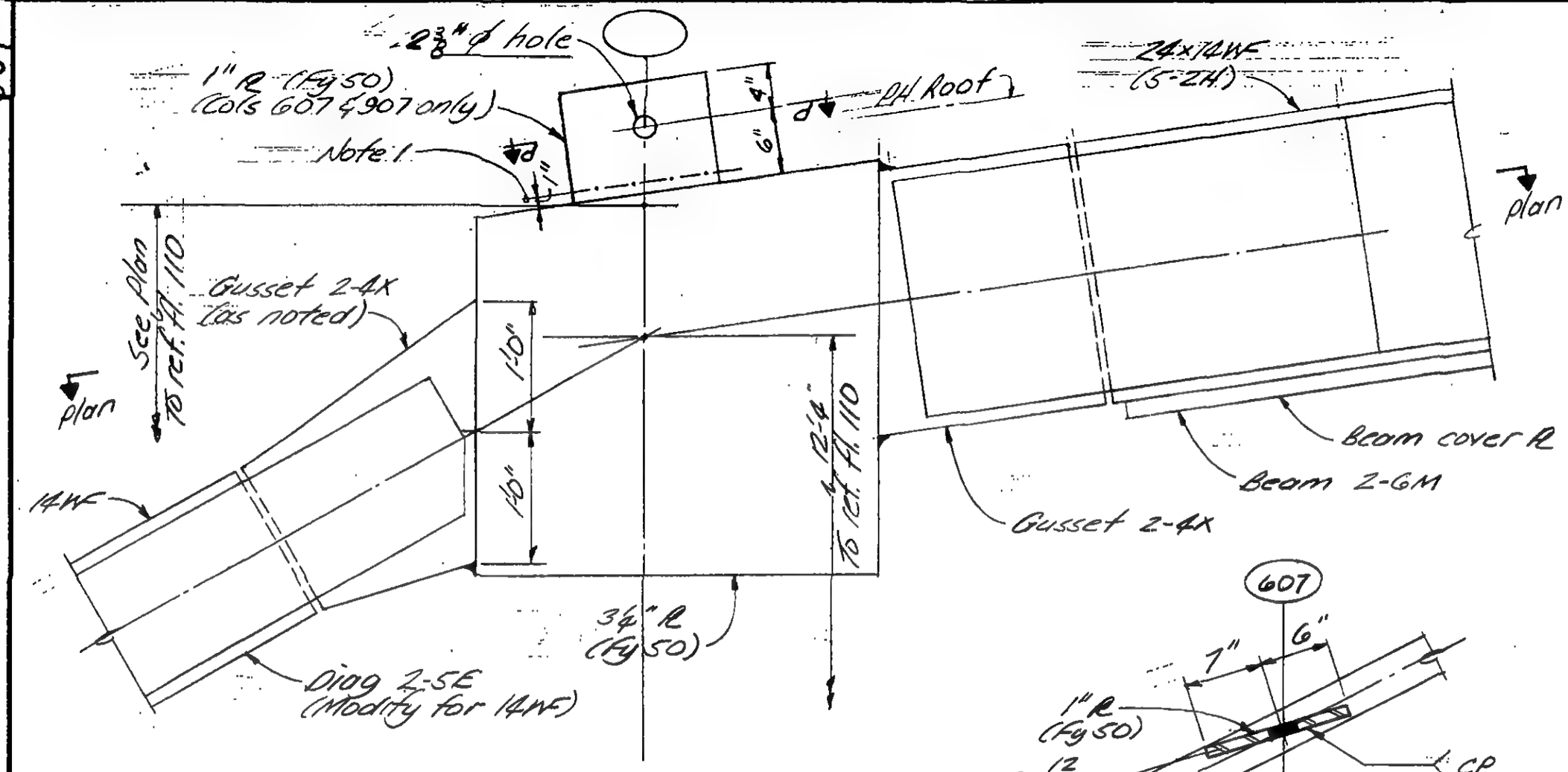

Section c-c

Note 1: —·—·— indicates smooth, notch-free (ASA 250) plate cut following removal of derrick.

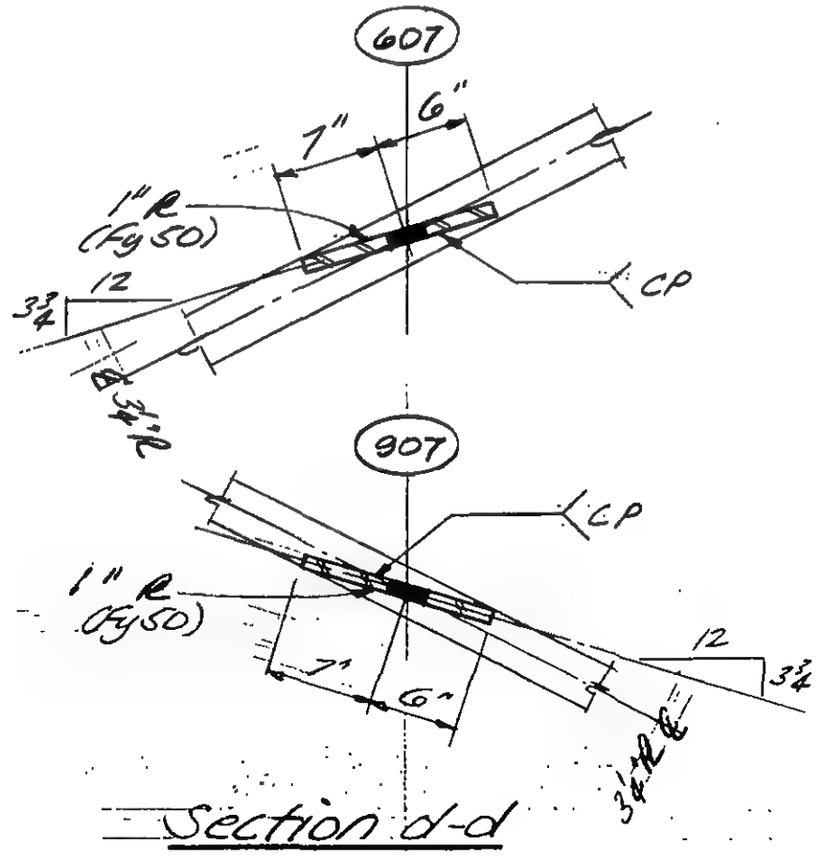

Section d-d

DESIGNED

DRAWN J. Adams

REVIEWED E. Drakos

9-AB17-3.4

SKILLING, HELLE, CHRISTIANSEN ROBERTSON — Structural & Civil Engineers

PROJECT: THE WORLD TRADE CENTER | TITLE: FL107 - PH CONNECTION DETAILS - PH ROOF | DATE: 12/14/70

REVISIONS

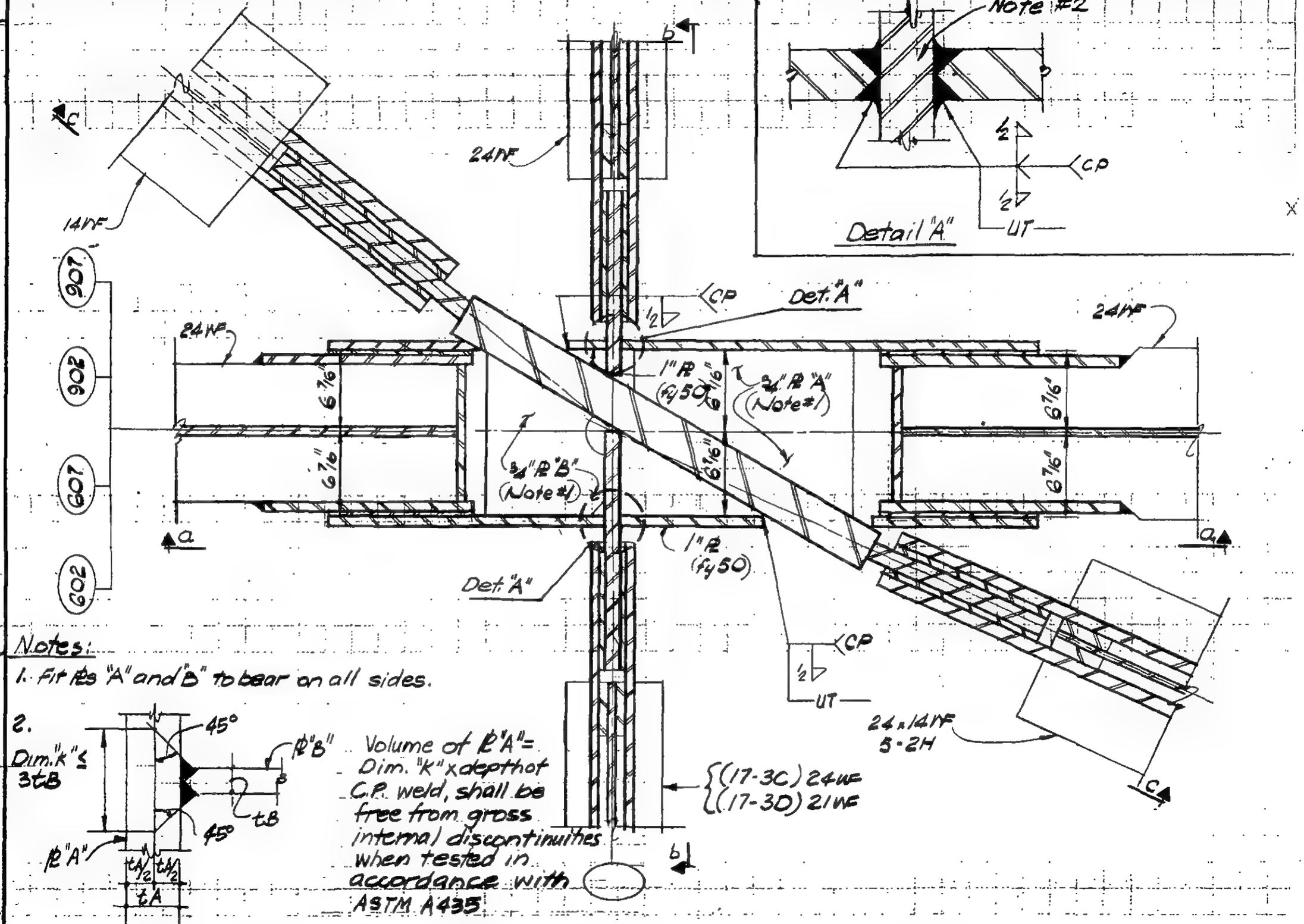

Notes:

1. Fit PLs "A" and "B" to bear on all sides.

2. Dim. "K" ≤ 3tB

Volume of PL "A" = Dim. "K" x depth of C.P. weld, shall be free from gross internal discontinuities when tested in accordance with ASTM A435

PLAN

DETAIL 17-3C (Col 602 as shown. Cols. 902 & 907 similar & as noted)

DETAIL 17-3D (Col 607 similar & as noted)

LICENSED PROFESSIONAL ENGINEER — LESLIE E. ROBERTSON — No. 34360 — UNIVERSITY OF THE STATE OF NEW YORK

DESIGNED

DRAWN: W. Clarke

REVIEWED

9-B17-3.5

SKILLING, HELLE, CHRISTIANSEN, ROBERTSON — Structural & Civil Engineers

PROJECT THE WORLD TRADE CENTER | TITLE FL 107 - PH CONNECTION DETAILS - PH ROOF | DATE 12/14/70

REVISIONS

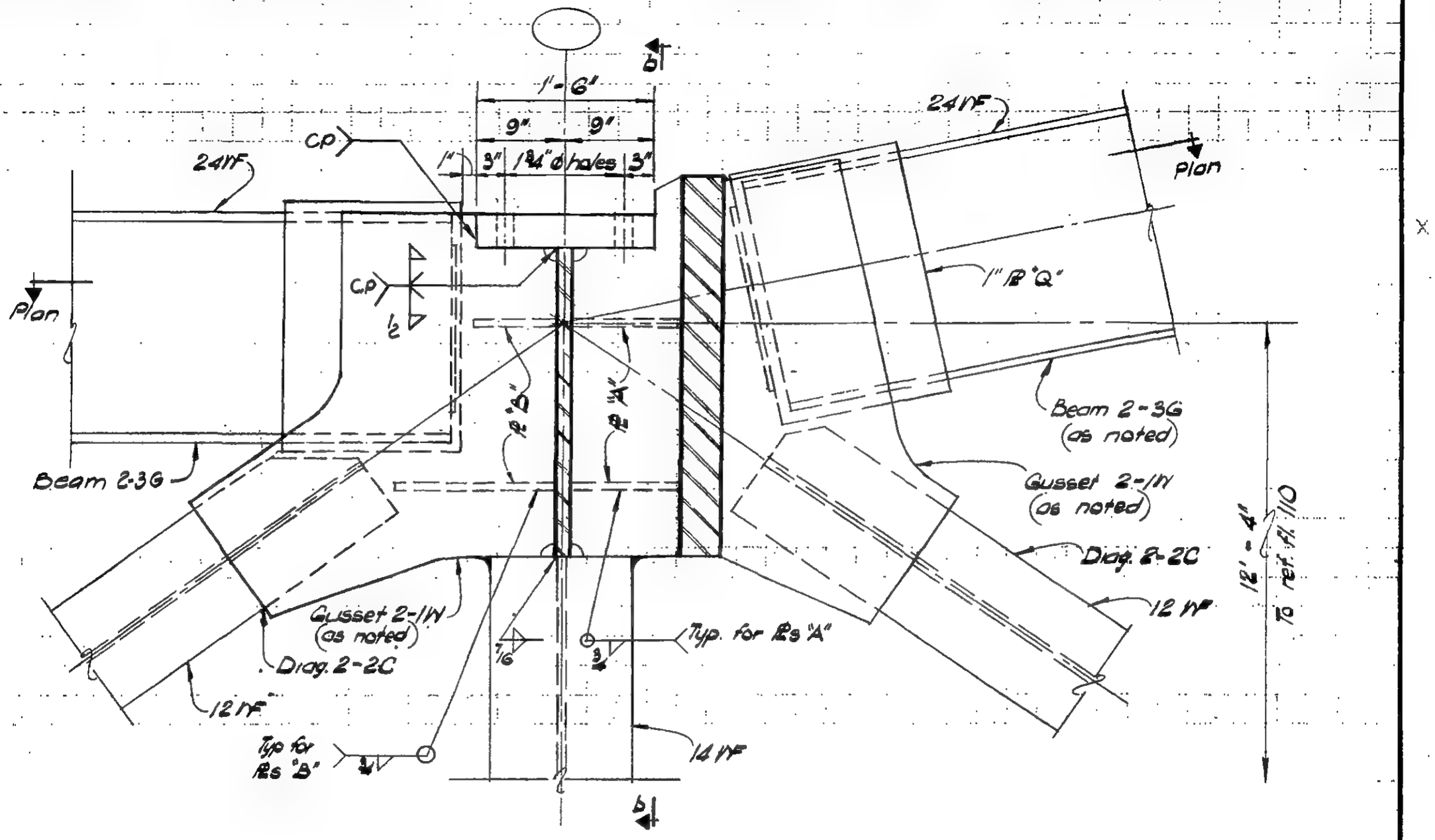

Section a-a

LICENSED PROFESSIONAL ENGINEER
LESLIE E. ROBERTSON
No. 34360
UNIVERSITY OF THE STATE OF NEW YORK

DESIGNED

DRAWN
W. Clarke

REVIEWED

9-B17-3.6

SKILLING, HELLE, CHRISTIANSEN, ROBERTSON — Structural & Civil Engineers

PROJECT: THE WORLD TRADE CENTER

TITLE: FL 107 - PH CONNECTION DETAILS - PH ROOF

DATE: 12/14/70

REVISIONS

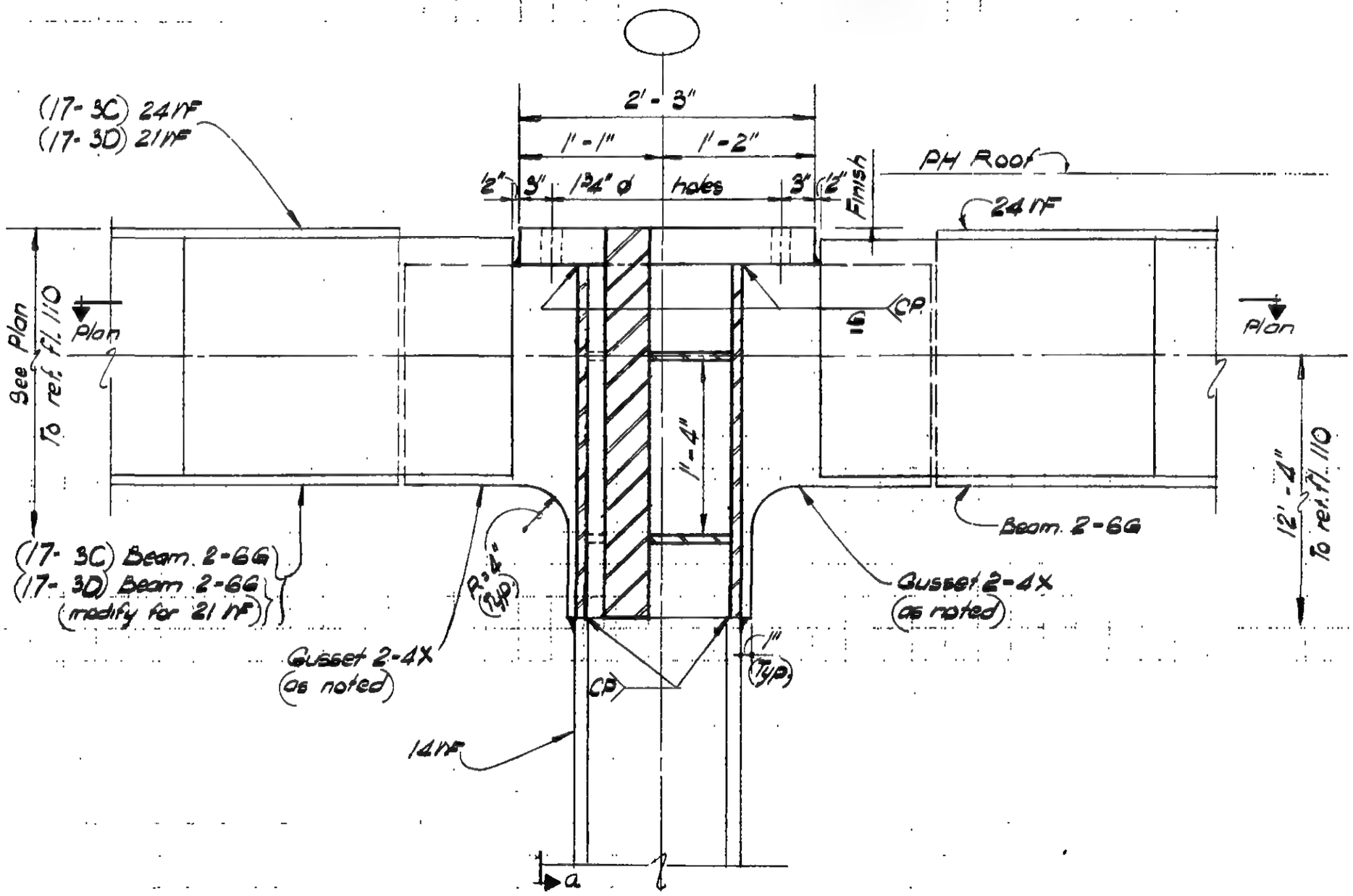

Section b-b

LICENSED PROFESSIONAL ENGINEER — LESLIE E. ROBERTSON — No. 34360 — UNIVERSITY OF THE STATE OF NEW YORK

DESIGNED

DRAWN: M. Clarke

REVIEWED

9-B17-3.7

SKILLING, HELLE, CHRISTIANSEN, ROBERTSON — Structural & Civil Engineers

PROJECT THE WORLD TRADE CENTER | TITLE FL 107 - PH CONNECTION DETAILS - PH ROOF | DATE 12/14/70

REVISIONS

Cap PL 3/2" thick stock PL (Fy50) shall be free of gross internal discontinuities. After milling, average thickness shall not be less than 3/4".

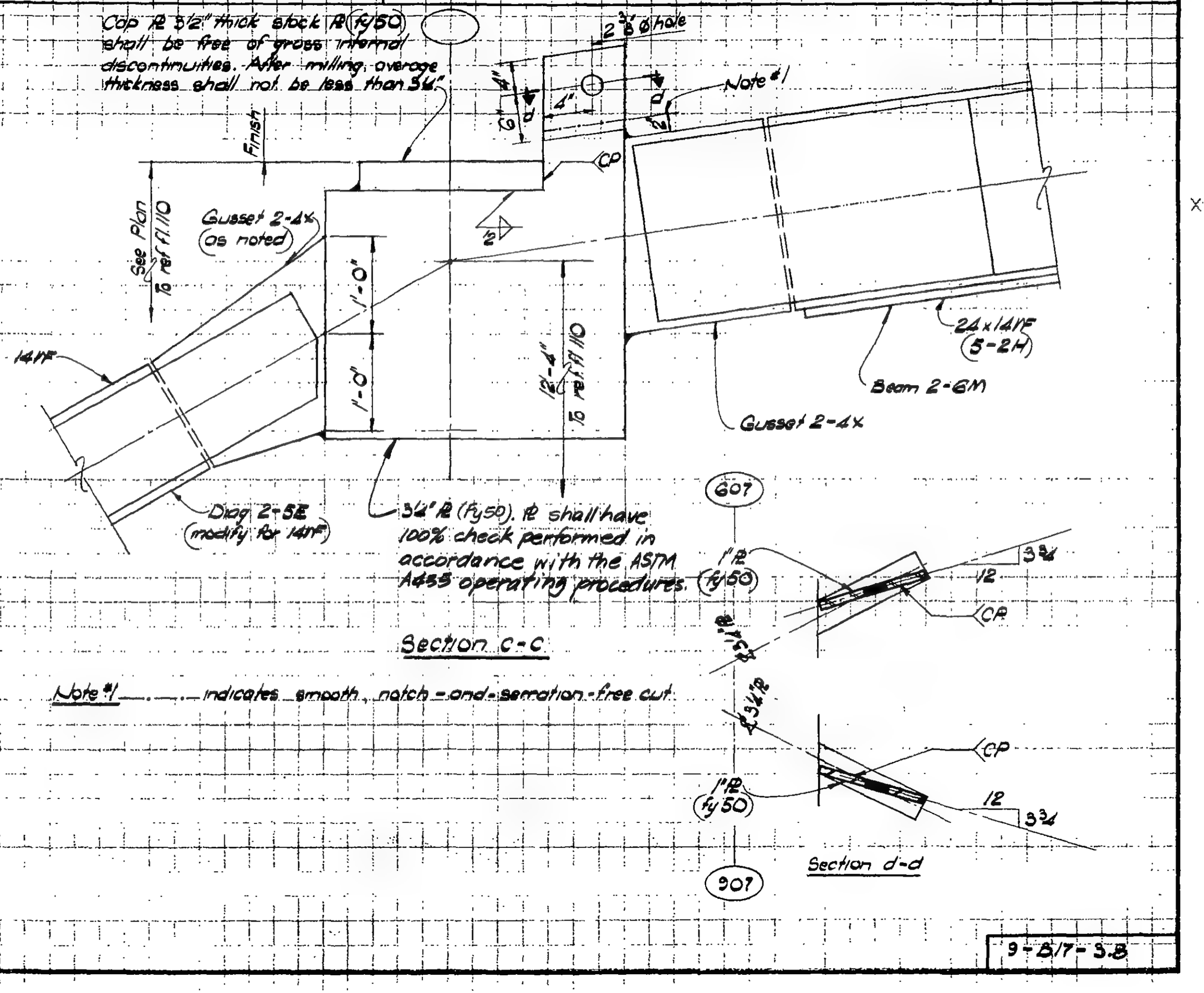

Section c-c

Section d-d

Note #1 ——.——.— indicates smooth, notch-and-serration-free cut

DESIGNED

DRAWN M. Clarke

REVIEWED

9-817-3.8

SKILLING, HELLE, CHRISTIANSEN, ROBERTSON — Structural & Civil Engineers

PROJECT: THE WORLD TRADE CENTER | TITLE: FL 107 - PH CONNECTION DETAILS - PH ROOF | DATE: 4-1-70

REVISIONS

7/10/70

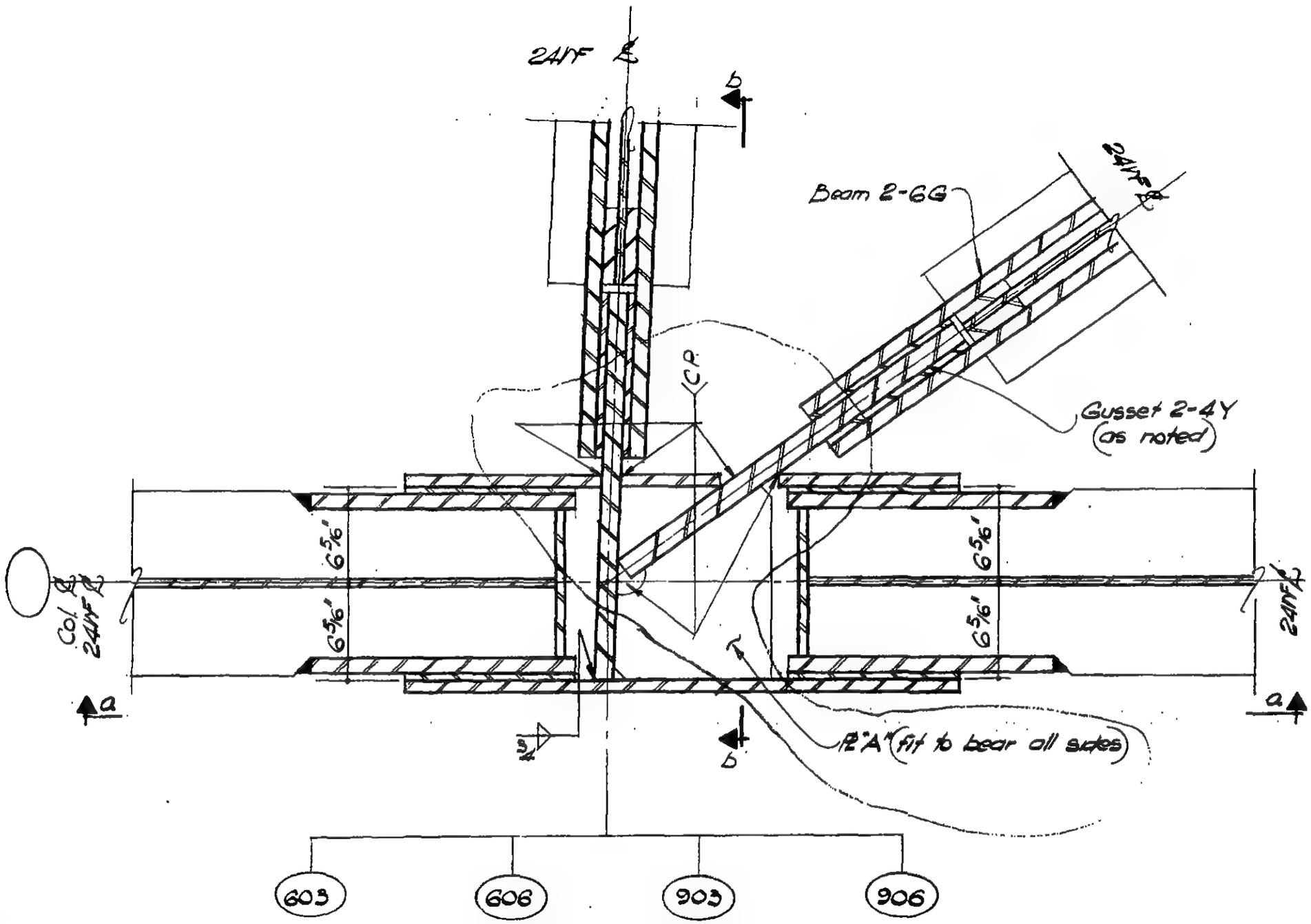

Plan

DETAIL 17-4

Col. 603 as shown
Col. 606, 903 & 906 similar

LICENSED PROFESSIONAL ENGINEER — LESLIE E. ROBERTSON — No. 34960 — UNIVERSITY OF THE STATE OF NEW YORK

DESIGNED

DRAWN: W. Clarke

REVIEWED: E. Dravos

9-AB17-4.1

SKILLING, HELLE, CHRISTIANSEN, ROBERTSON — Structural & Civil Engineers

PROJECT THE WORLD TRADE CENTER | TITLE FL 107 - PH CONNECTION DETAILS - PH ROOF | DATE 4 - 1 - 70

REVISIONS

7/10/70

~~9/26/70~~

7/10/70

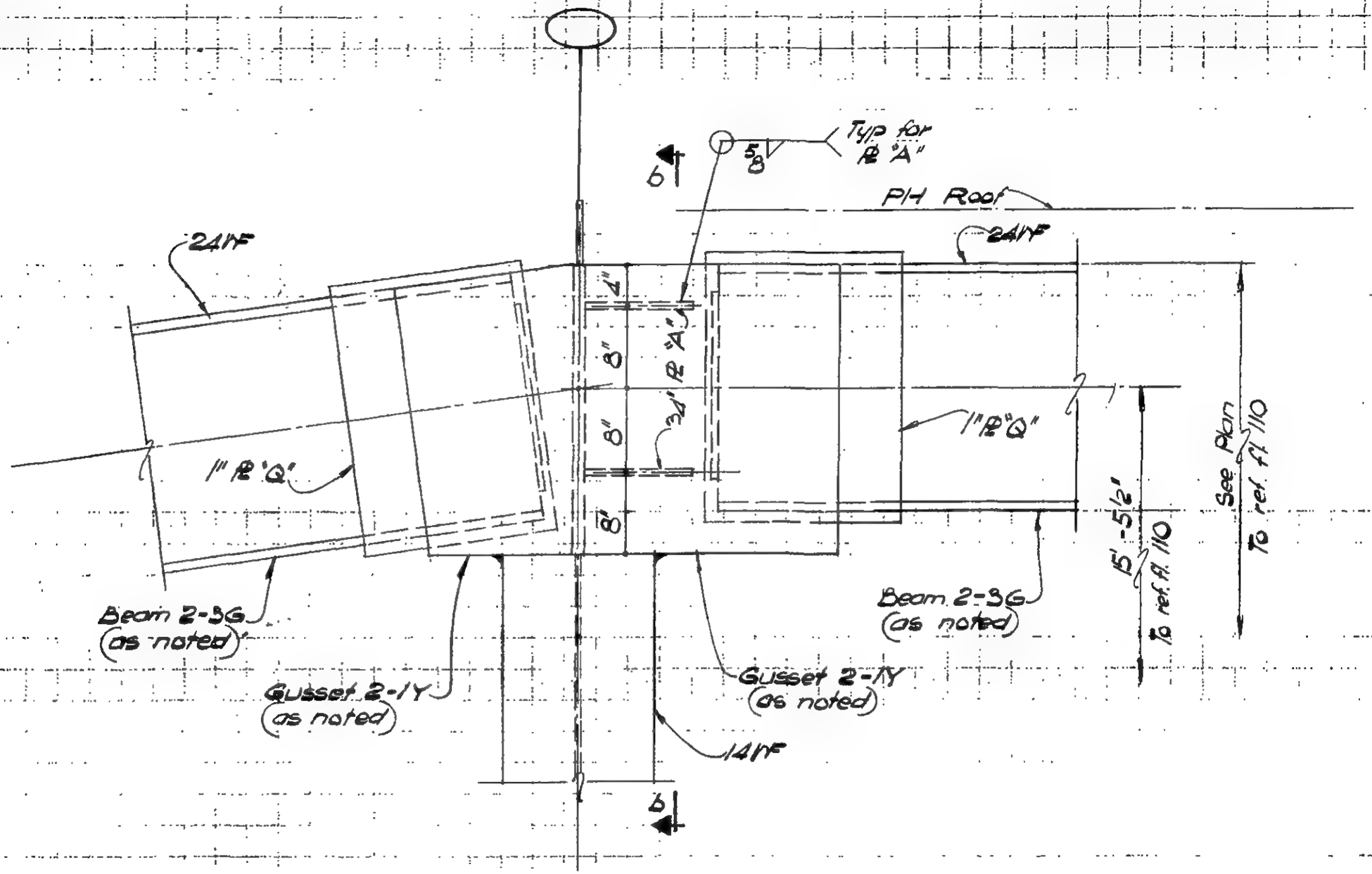

Section a - a

LICENSED PROFESSIONAL ENGINEER — LESLIE E. ROBERTSON — No. 34360 — UNIVERSITY OF THE STATE OF NEW YORK

DESIGNED

DRAWN M. Clarke

REVIEWED E. Drakos

9-AB17-4.2

SKILLING, HELLE, CHRISTIANSEN, ROBERTSON — Structural & Civil Engineers

PROJECT THE WORLD TRADE CENTER | TITLE FL 107 - PH. CONNECTION DETAILS - PH. ROOF | DATE 4 - 1 - 70

REVISIONS

7/10/70
void ~~9/25/70~~
7/10/70

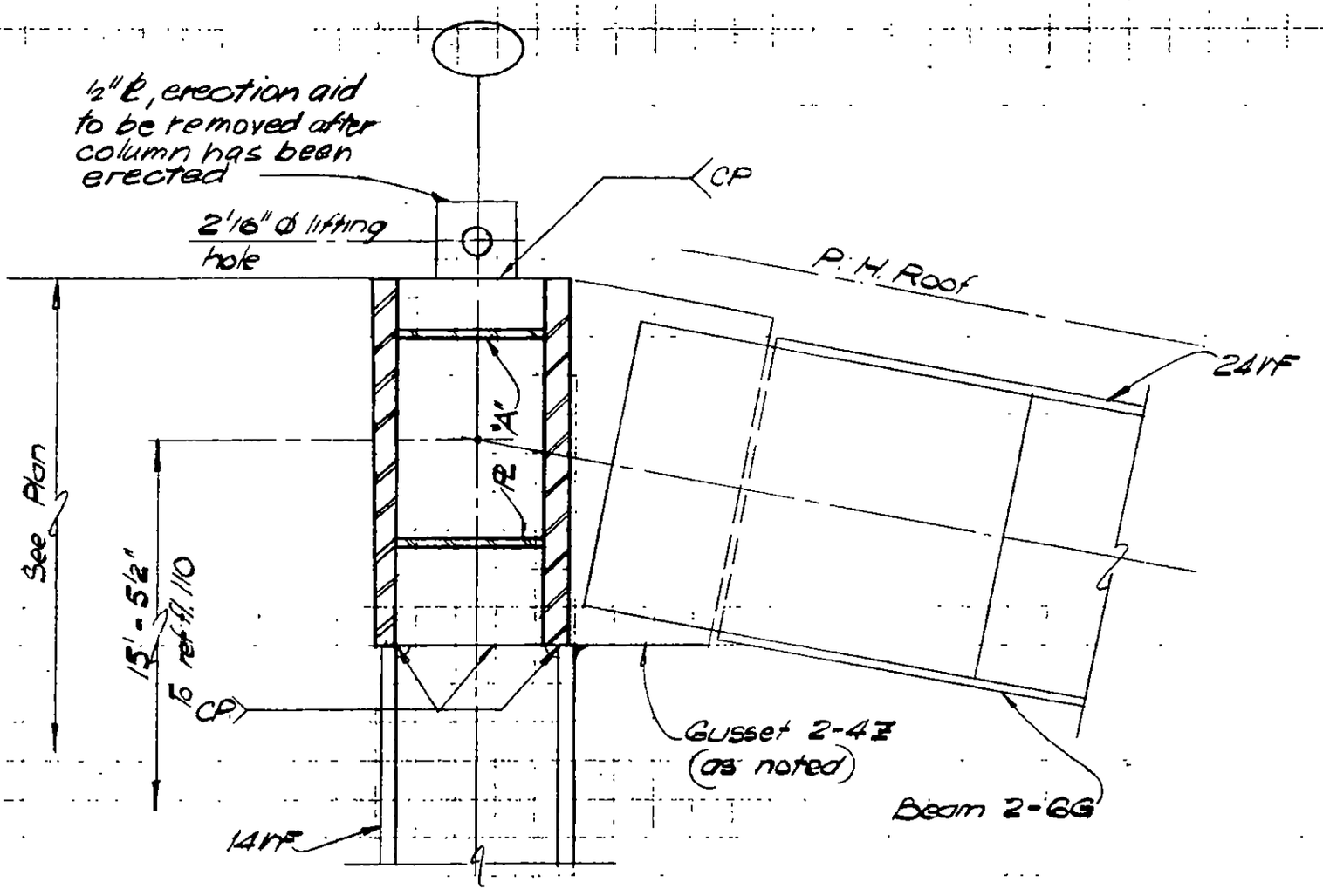

Section 5 - 5

LICENSED PROFESSIONAL ENGINEER
LESLIE E. ROBERTSON
No 34360
UNIVERSITY OF THE STATE OF NEW YORK

DESIGNED

DRAWN
M. Clarke

REVIEWED
E. Drakos

9-AB17-4.3

SKILLING, HELLE, CHRISTIANSEN, ROBERTSON — Structural & Civil Engineers

PROJECT THE WORLD TRADE CENTER | TITLE FL 107 - PH CONNECTION DETAILS - PH ROOF | DATE 12/14/70

REVISIONS

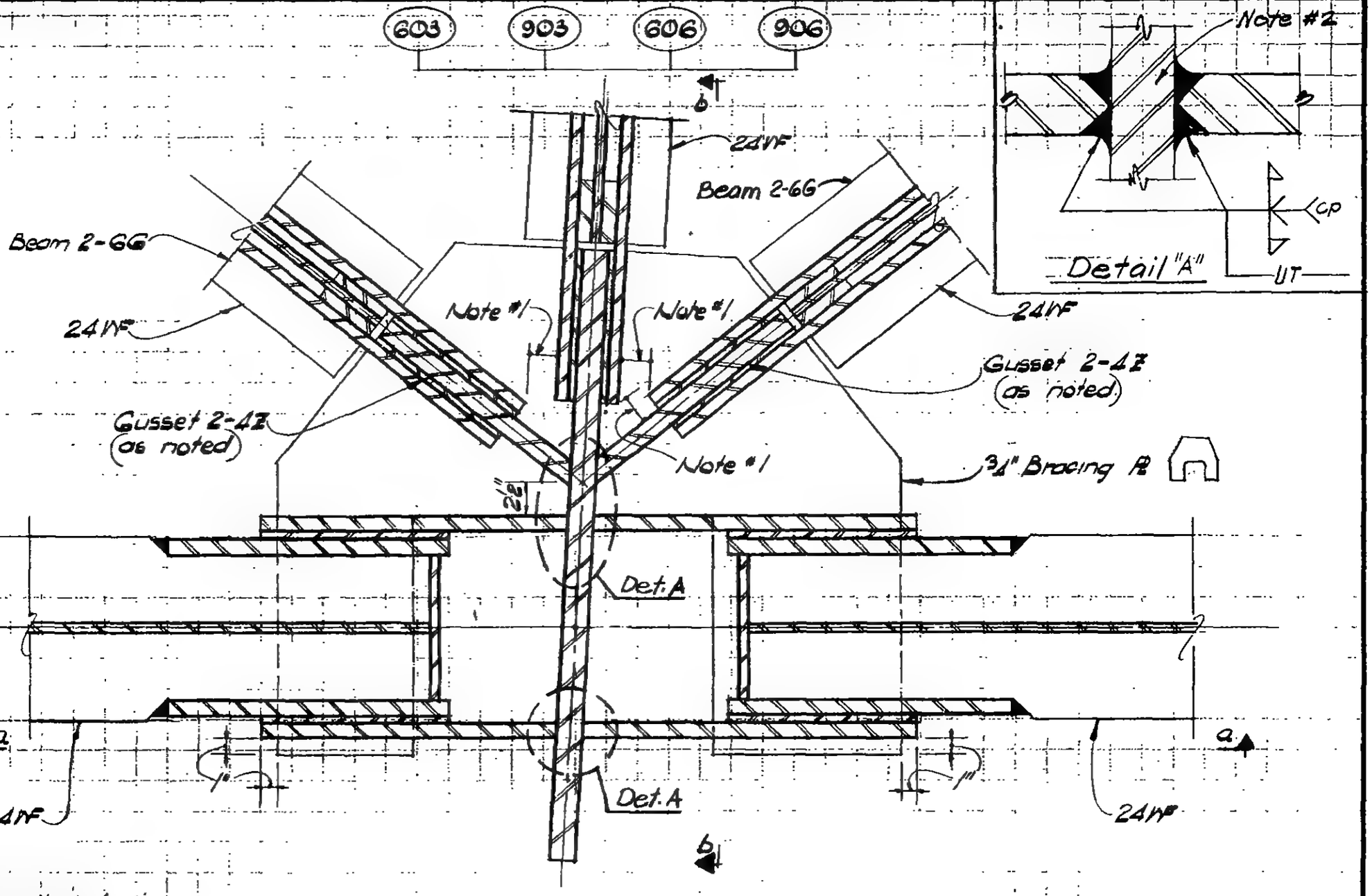

Notes:

1. keep indicated dimensions an absolute minimum.

2. Volume of ℄"A" = Dim. K" x depth of C.P. weld, shall be free from gross internal discontinuities when tested in accordance with ASTM A435.

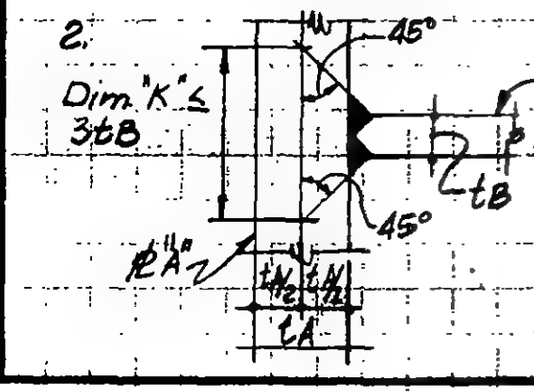

PLAN

DETAIL 17-4B

(Col. 603 as shown)

(Col. 606, 903 & 906 similar)

LICENSED PROFESSIONAL ENGINEER — LESLIE E. ROBERTSON — No. 34360 — UNIVERSITY OF THE STATE OF NEW YORK

DESIGNED

DRAWN W. Clarke

REVIEWED

9-B17-4.4

SKILLING, HELLE, CHRISTIANSEN, ROBERTSON — Structural & Civil Engineers

PROJECT THE WORLD TRADE CENTER | TITLE FL 107 - PH CONNECTION DETAILS - PH ROOF | DATE 12/14/70

REVISIONS

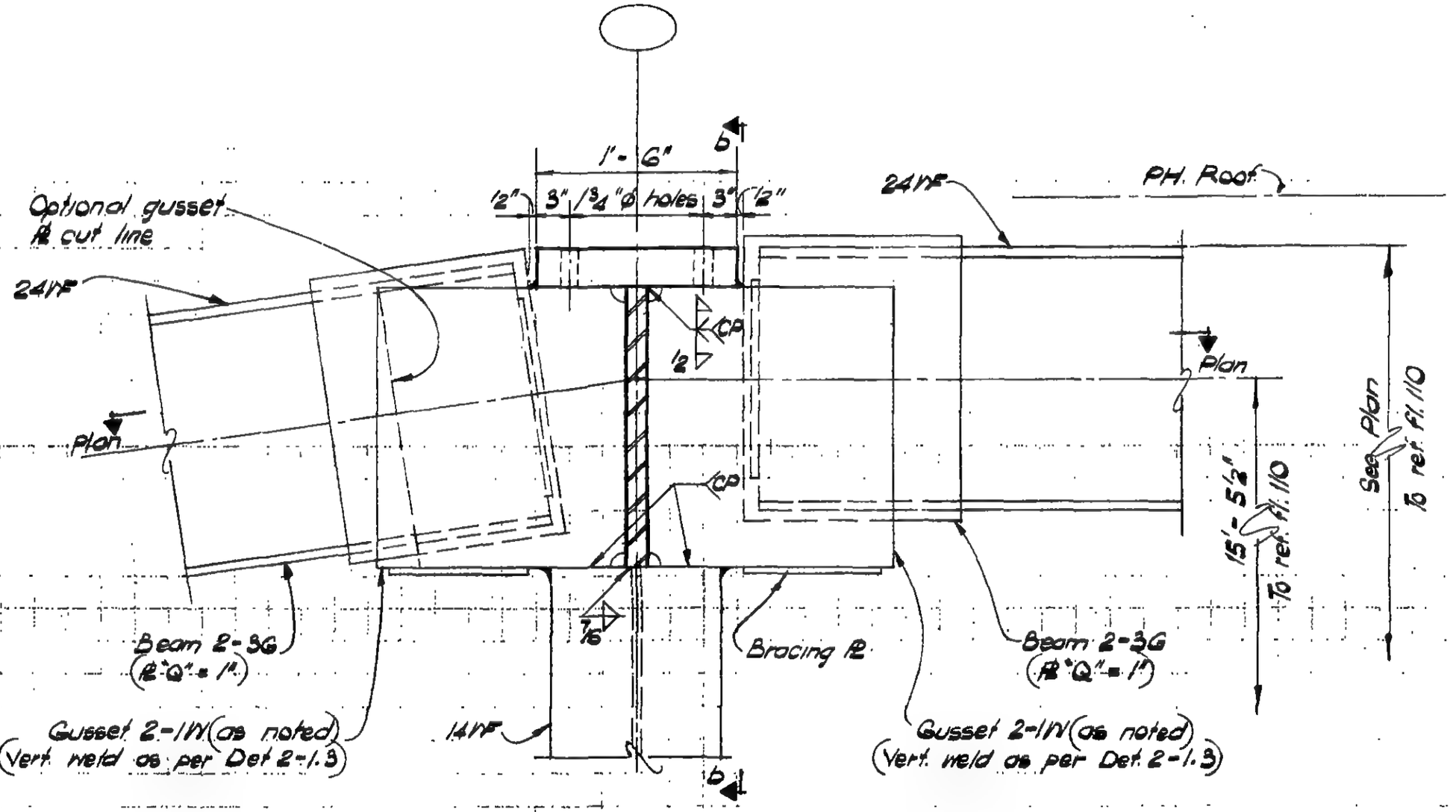

Section a-a

LICENSED PROFESSIONAL ENGINEER
LESLIE E. ROBERTSON
No. 34960
UNIVERSITY OF THE STATE OF NEW YORK

DESIGNED

DRAWN
W. Clarke

REVIEWED

9-B17-4.5

SKILLING, HELLE, CHRISTIANSEN, ROBERTSON — Structural & Civil Engineers

PROJECT THE WORLD TRADE CENTER | TITLE FL 107 - PH CONNECTION DETAILS - PH ROOF | DATE 12/14/70

REVISIONS

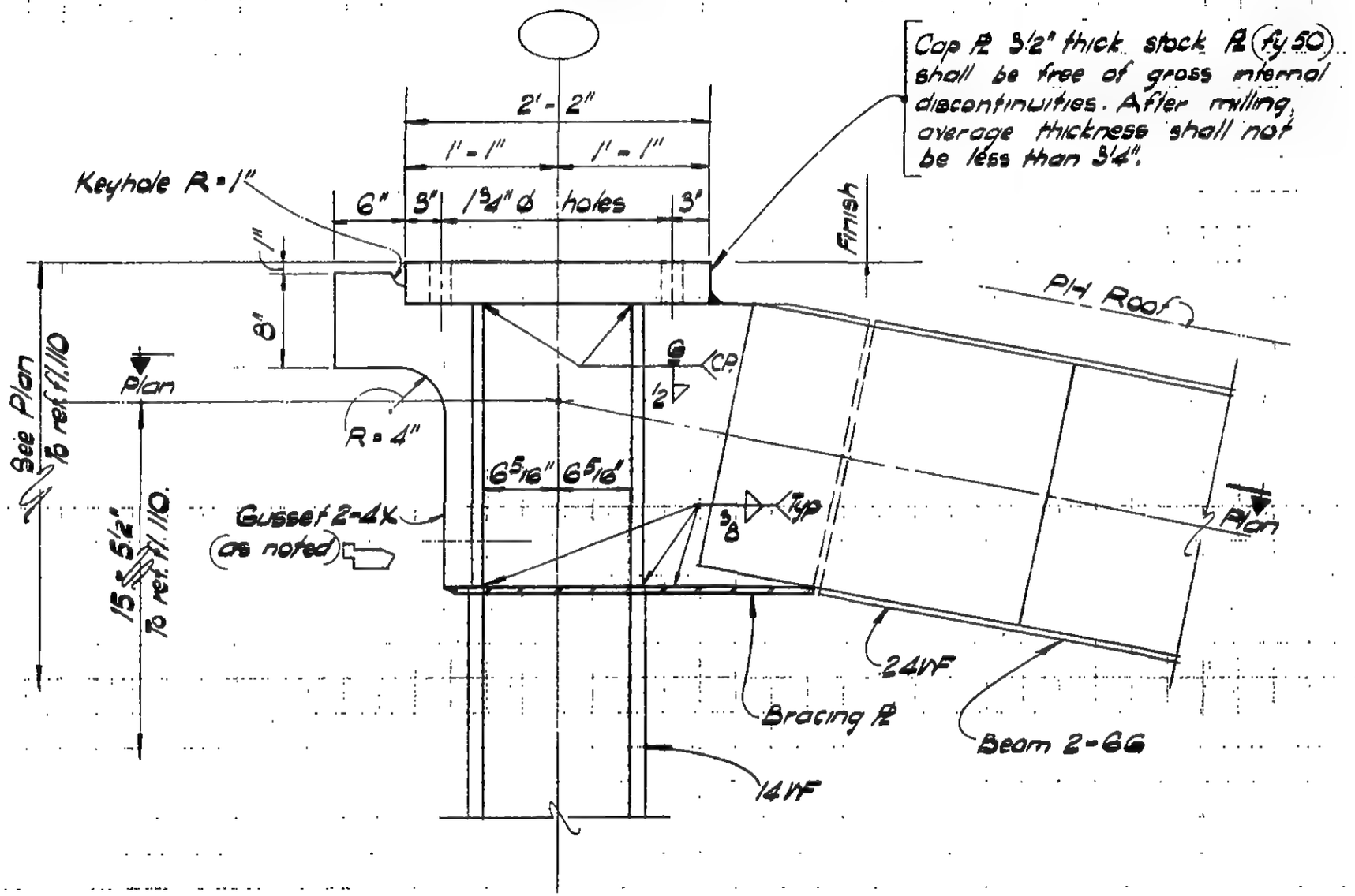

Section b-b

LICENSED PROFESSIONAL ENGINEER — LESLIE E. ROBERTSON — No. 34860 — UNIVERSITY OF THE STATE OF NEW YORK

DESIGNED

DRAWN W. Clarke

REVIEWED

9-B/7-4.6

SKILLING, HELLE, CHRISTIANSEN, ROBERTSON — Structural & Civil Engineers

PROJECT THE WORLD TRADE CENTER | TITLE Fl. 107-PH CONNECTION DETAILS-PH ROOF | DATE 4-1-70

REVISIONS

6/18/70

7-13-70

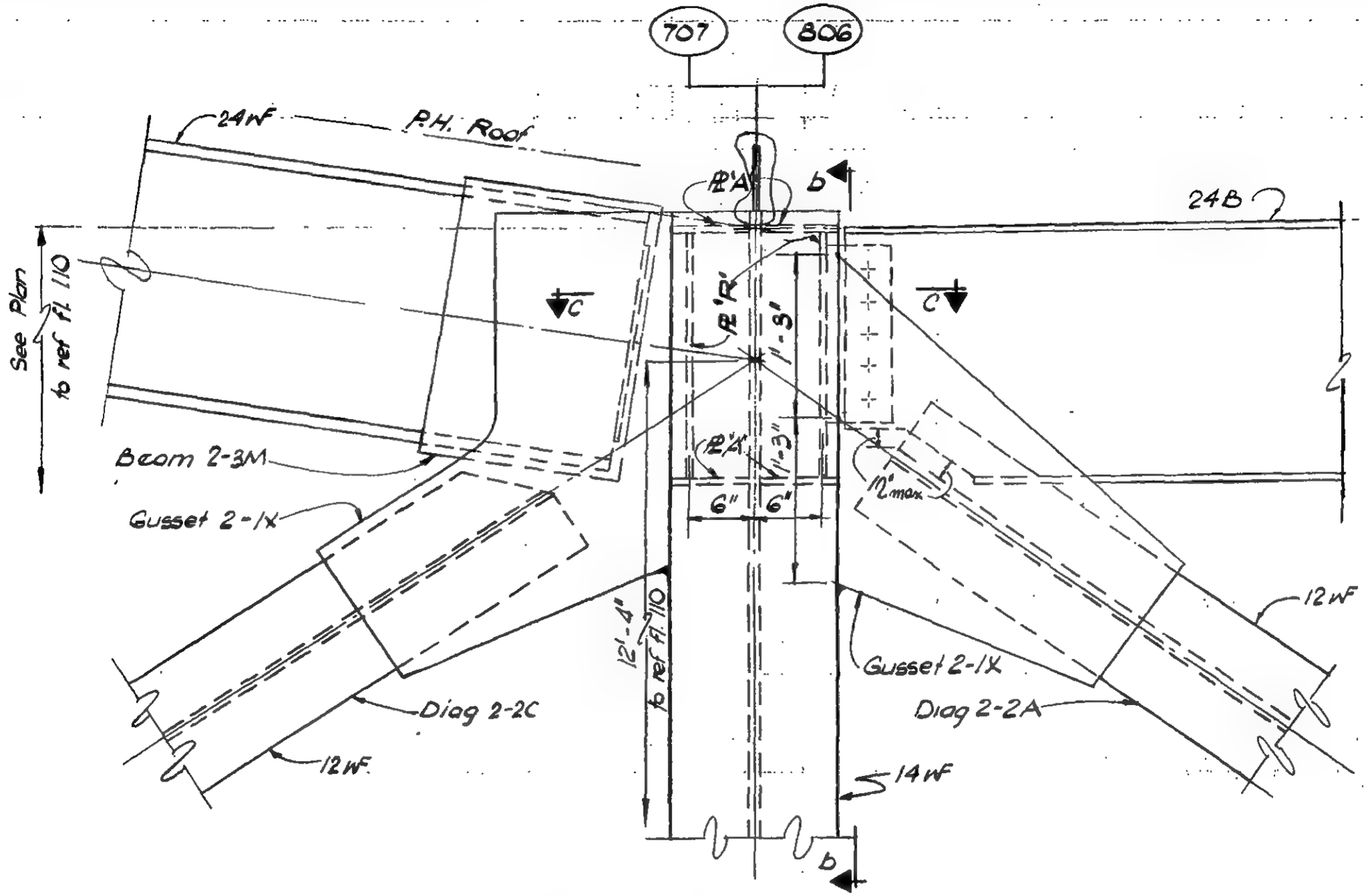

Section a-a

DETAIL 17-5A (Col. 806)
DETAIL 17-5C (Col. 707)
} as noted.

LICENSED PROFESSIONAL ENGINEER — LESLIE E. ROBERTSON — No. 34860 — UNIVERSITY OF THE STATE OF NEW YORK

DESIGNED ...Patel

DRAWN D.Huggins

REVIEWED E. Drakos

9-AB 17-5.1

SKILLING, HELLE, CHRISTIANSEN, ROBERTSON — Structural & Civil Engineers

PROJECT: THE WORLD TRADE CENTER

TITLE: FL 107 - PH CONNECTION DETAILS - P.H ROOF

DATE: 4 - 1 - 70

REVISIONS

- 6/18/70
- 7/13/70

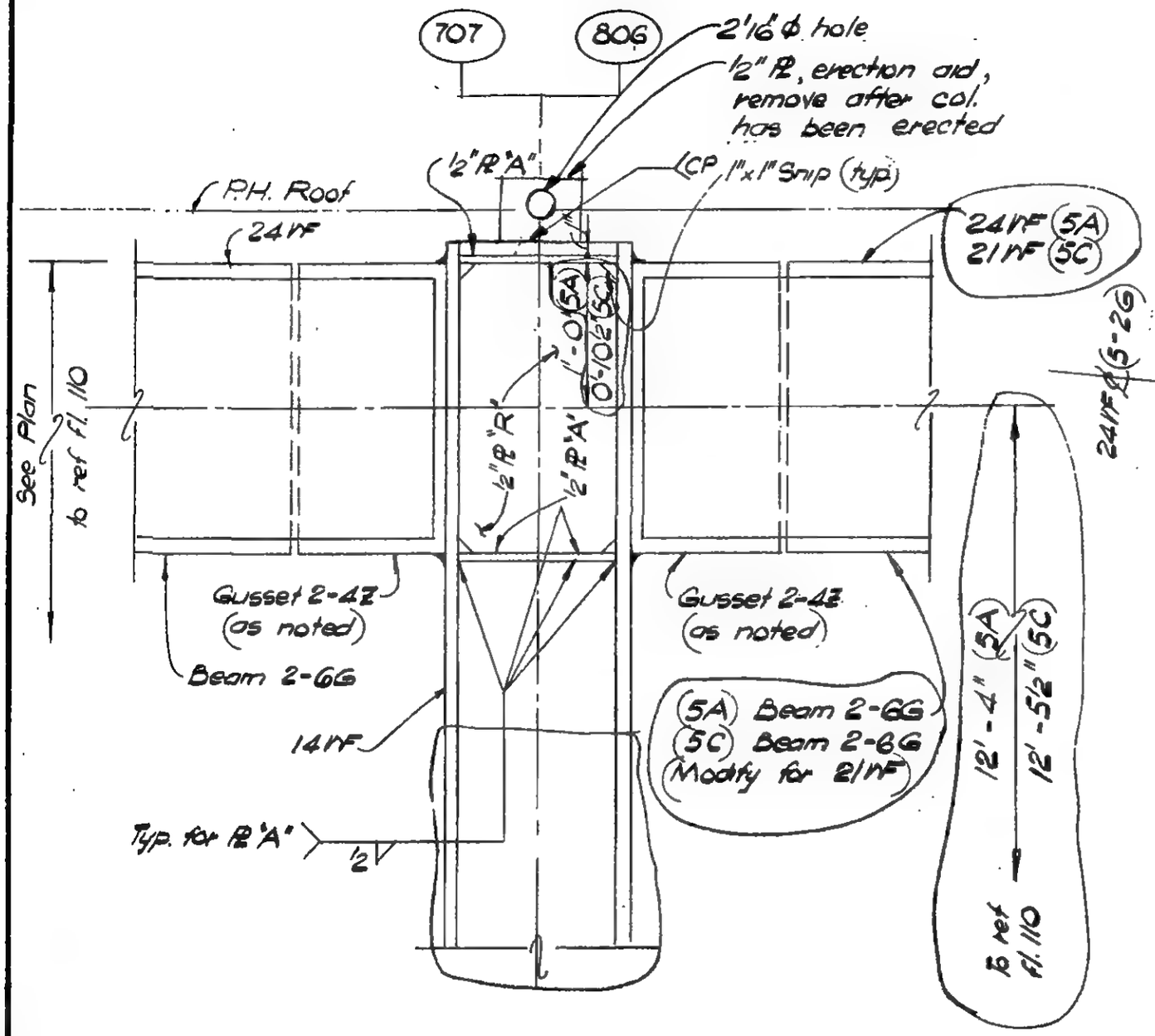

Section b - b

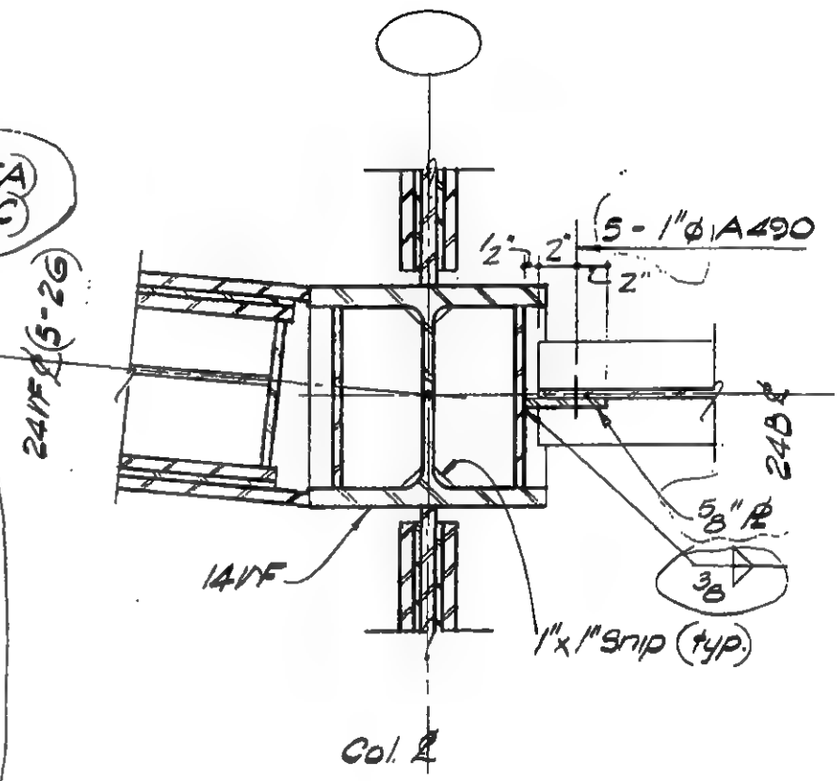

Section c-c

LICENSED PROFESSIONAL ENGINEER — LESLIE E. ROBERTSON — No. 34860 — UNIVERSITY OF THE STATE OF NEW YORK

DESIGNED: T. HWANG

DRAWN: M. Clarke

REVIEWED: E. Drakos

9 - AB17 - 5.2

SKILLING, HELLE, CHRISTIANSEN, ROBERTSON — Structural & Civil Engineers

PROJECT: THE WORLD TRADE CENTER | TITLE: FL 107 - PH CONNECTION DETAILS - PH ROOF | DATE: 4-1-70

REVISIONS
- 6/18/70
VOID ~~9/25/70~~
6/18/70

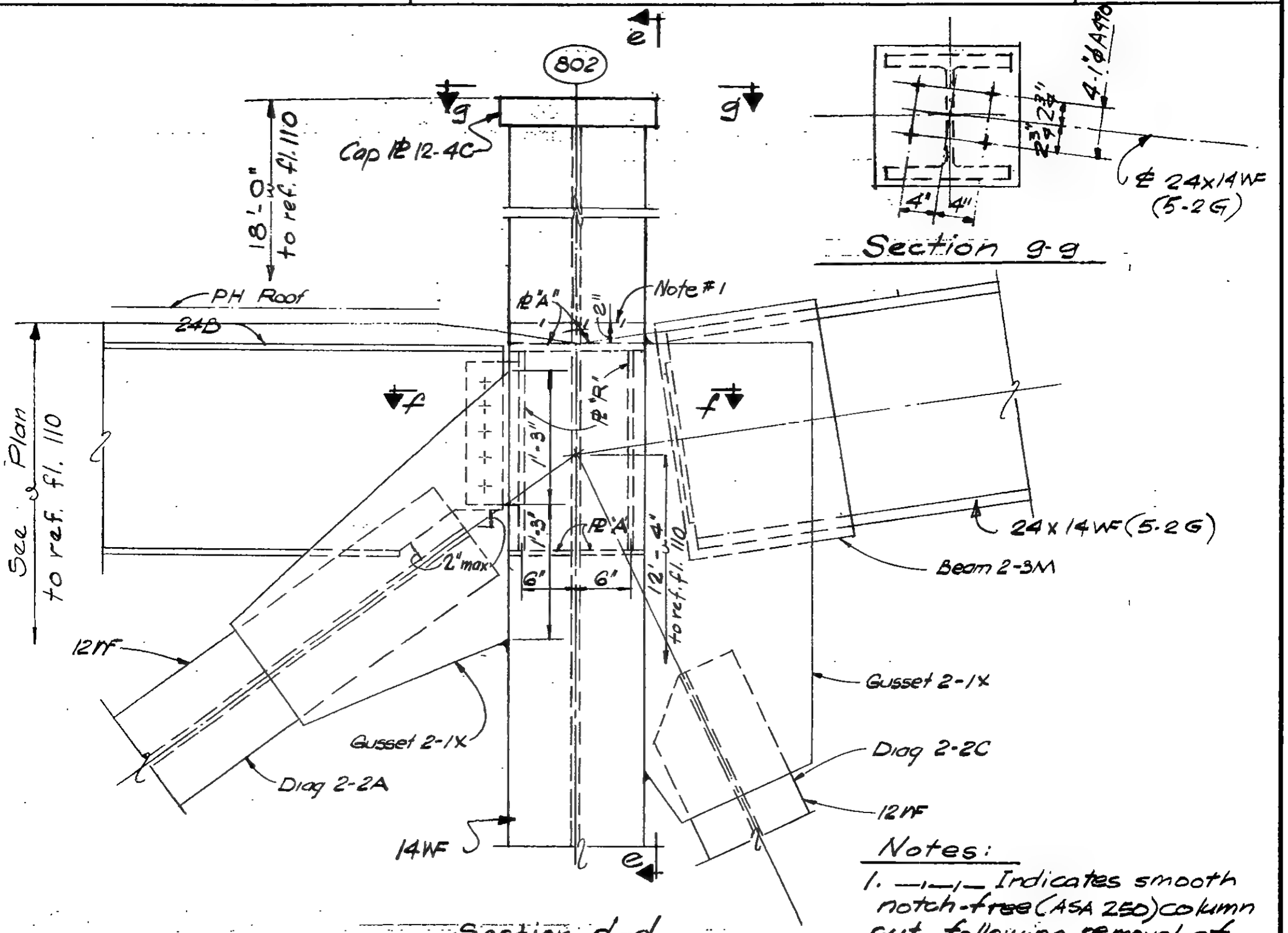

Section d-d

Detail 17-5B

Notes:

1. —/—/— Indicates smooth notch-free (ASA 250) column cut, following removal of derrick.

LICENSED PROFESSIONAL ENGINEER — LESLIE E. ROBERTSON — No. 34360 — UNIVERSITY OF THE STATE OF NEW YORK

DESIGNED: T. HWANG
DRAWN: W. Clarke
REVIEWED: E. Orakos

9-AB17-5.8

SKILLING, HELLE, CHRISTIANSEN, ROBERTSON — Structural & Civil Engineers

PROJECT: THE WORLD TRADE CENTER | TITLE: FL 107 - PH CONNECTION DETAIL - P.H. ROOF | DATE: 4-1-70

REVISIONS

- 6/18/70
- 7/13/70
- VOID ~~9/25/70~~
- 7/13/70

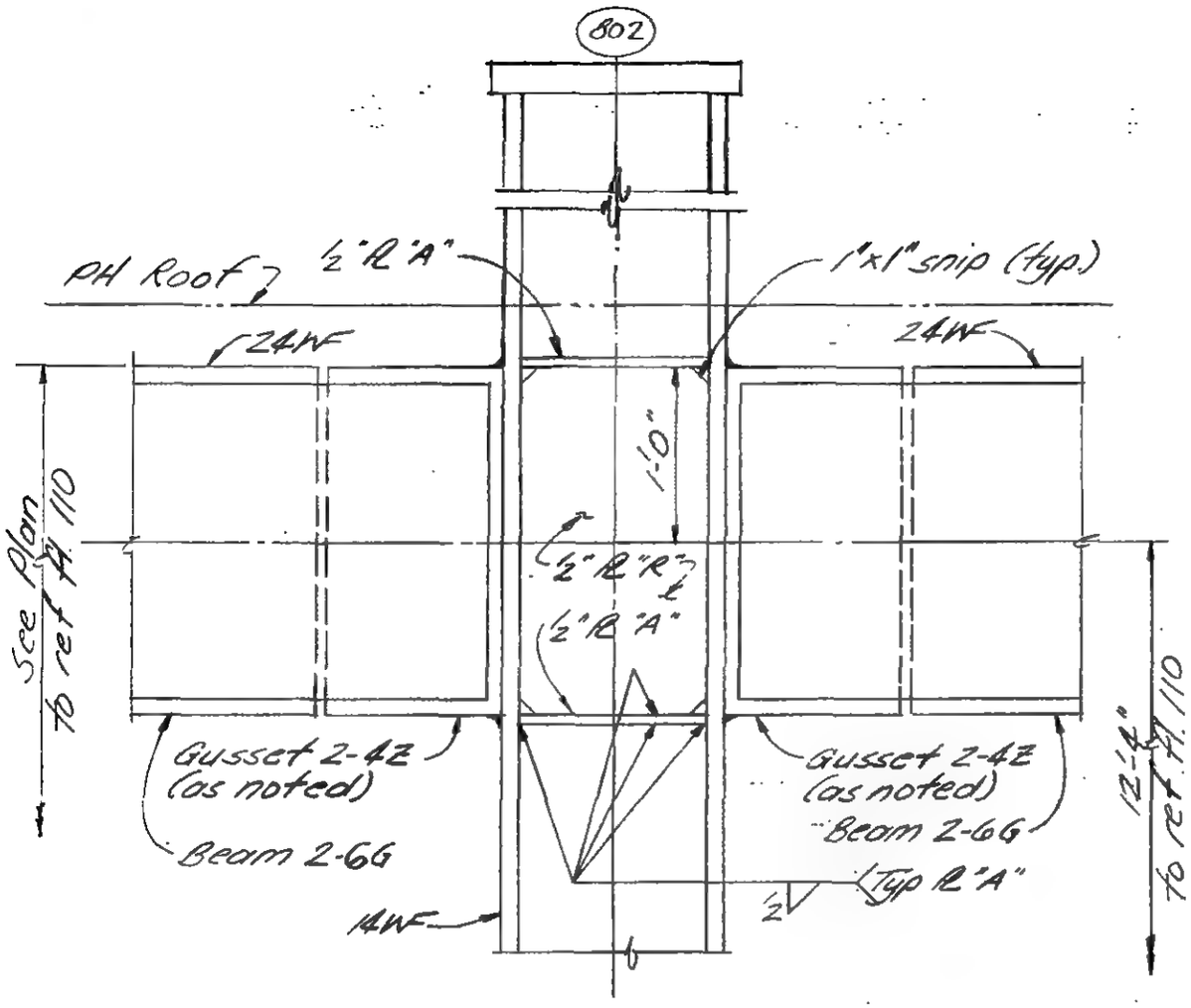

Section e-e

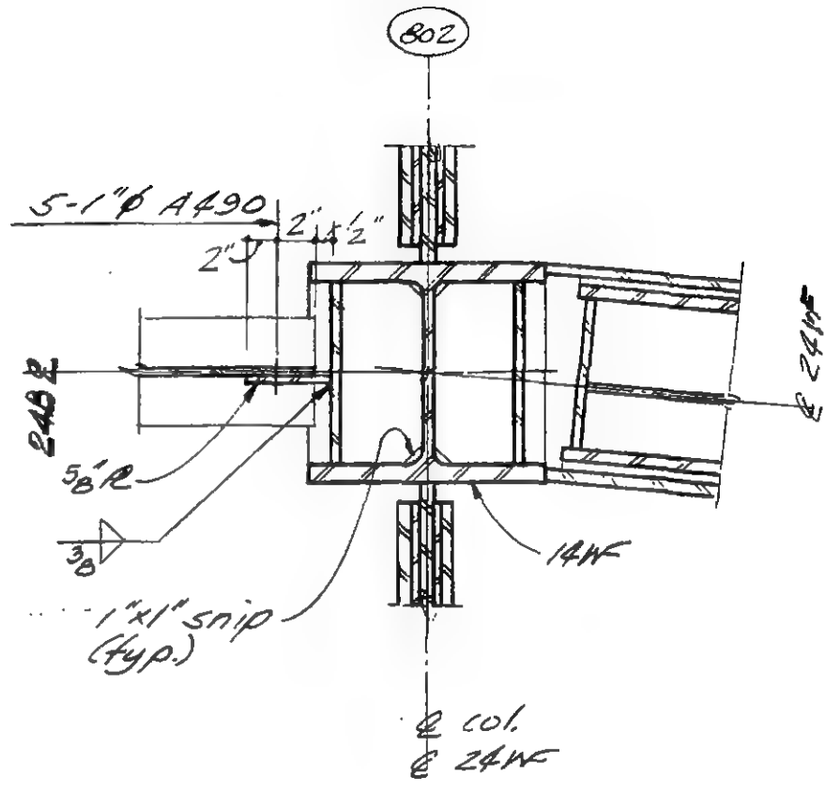

Section f-f

LICENSED PROFESSIONAL ENGINEER — LESLIE E. ROBERTSON — No. 34960 — UNIVERSITY OF THE STATE OF NEW YORK

DESIGNED: T. HWANG
DRAWN: J. Adams
REVIEWED: E. Drakos

9-AB17-5.4

SKILLING, HELLE, CHRISTIANSEN, ROBERTSON — Structural & Civil Engineers

PROJECT: THE WORLD TRADE CENTER | TITLE: FL 107 - PH. CONNECTION DETAILS - P.H. ROOF | DATE: 4-1-70

REVISIONS

- 6/18/70
- VOID ~~9/25/70~~ 6/18/70

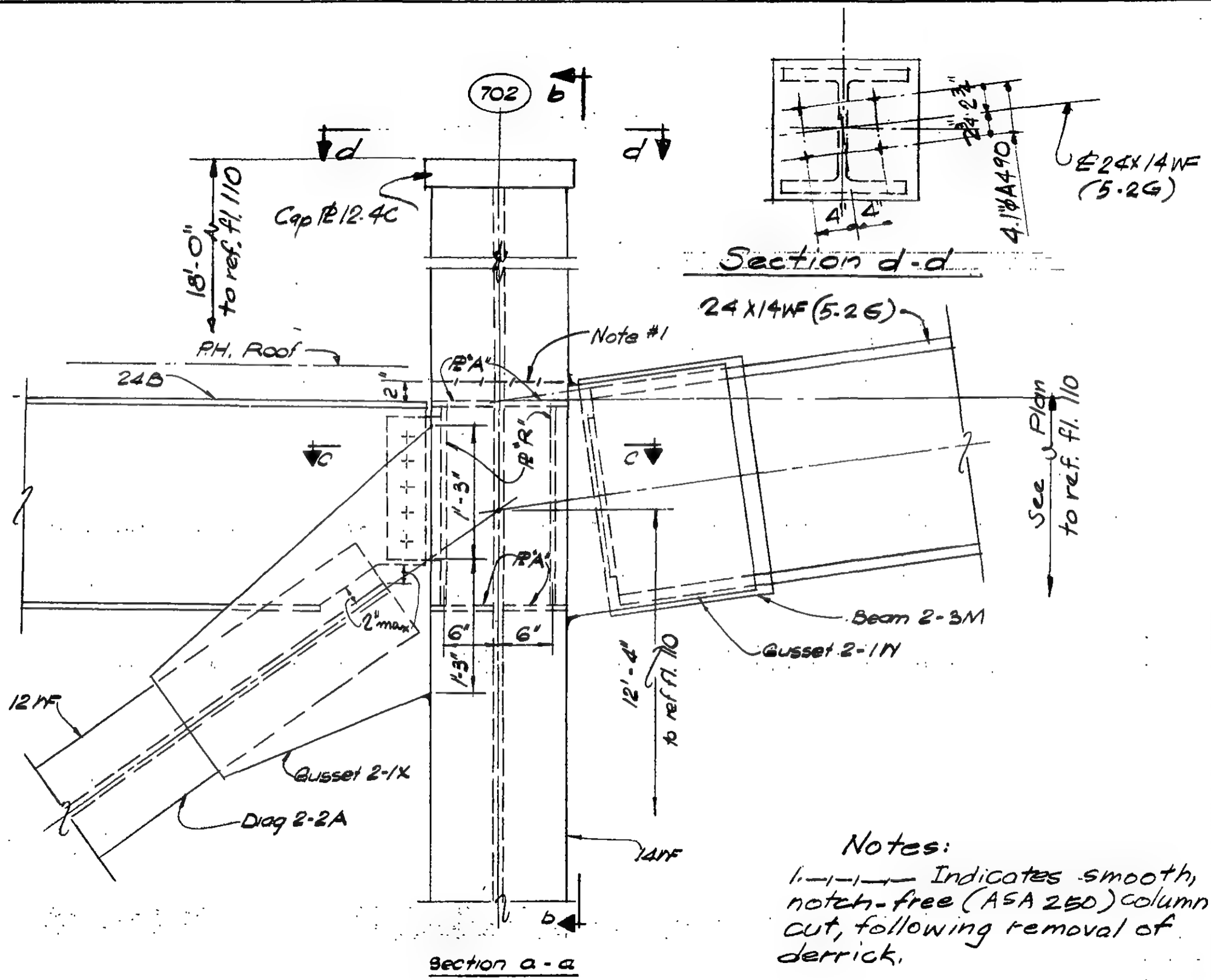

Notes:

1. —/—/—/— Indicates smooth, notch-free (ASA 250) column cut, following removal of derrick.

DETAIL 17-6

9-AB17-6.1

LICENSED PROFESSIONAL ENGINEER — LESLIE E. ROBERTSON — No. 34360 — UNIVERSITY OF THE STATE OF NEW YORK

DESIGNED: K. HWANG
DRAWN: W. Clarke
REVIEWED: E. Drakos

SKILLING, HELLE, CHRISTIANSEN, ROBERTSON — Structural & Civil Engineers

PROJECT THE WORLD TRADE CENTER | TITLE FL 107 - PH CONNECTION DETAILS - P.H. ROOF | DATE 6-18-70

REVISIONS

7-13-70
VOID ~~9/25/70~~
7-13-70

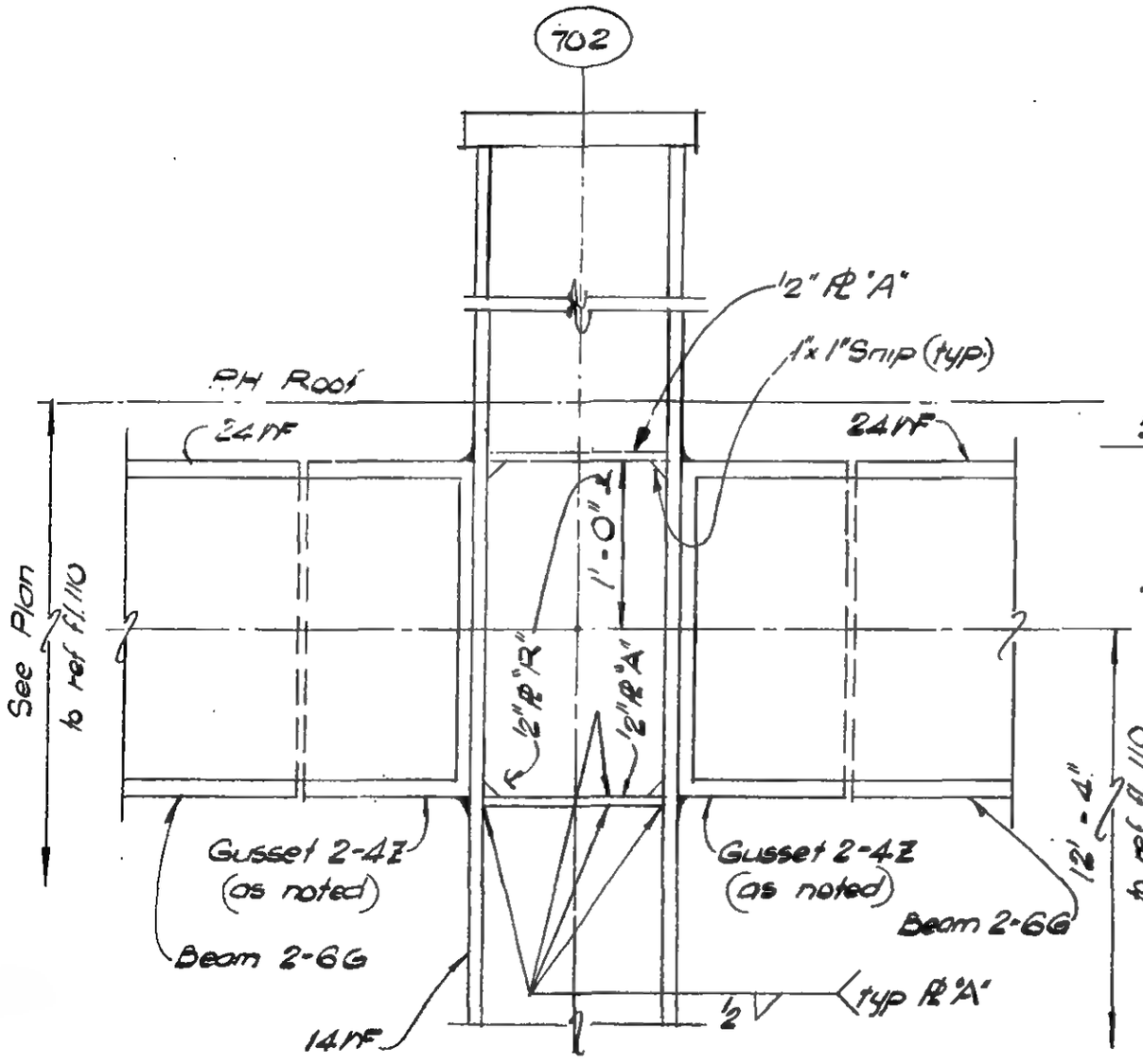

Section b-b

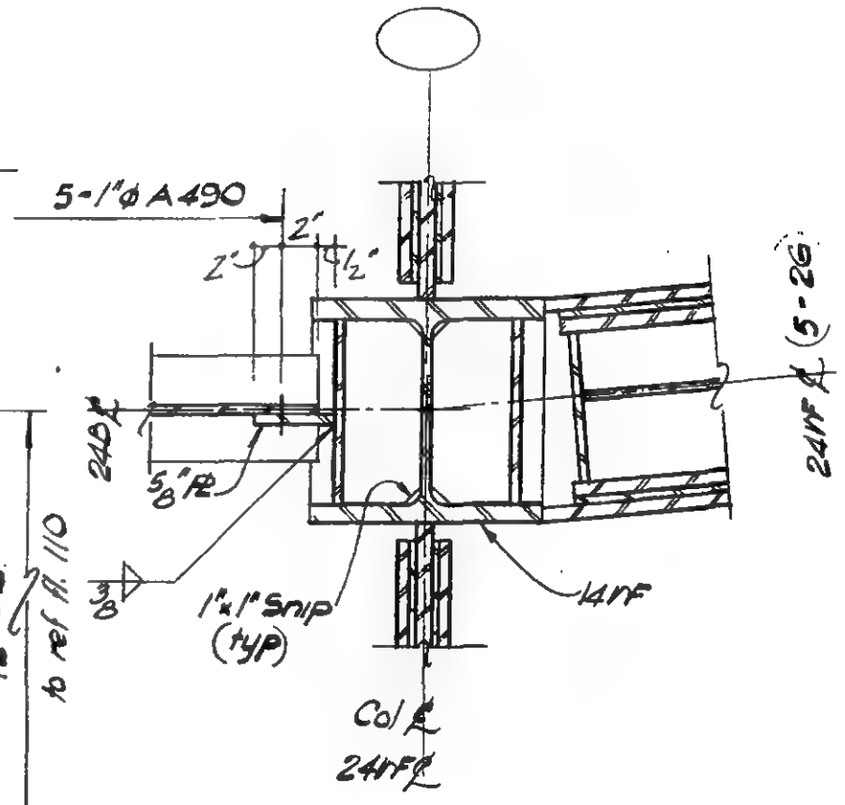

Section c-c

LICENSED PROFESSIONAL ENGINEER
LESLIE E. ROBERTSON
No. 34360
UNIVERSITY OF THE STATE OF NEW YORK

DESIGNED K. HWANG
DRAWN W. Clarke
REVIEWED E. Drakos

9-AB17-6.2

SKILLING, HELLE, CHRISTIANSEN, ROBERTSON — Structural & Civil Engineers

PROJECT THE WORLD TRADE CENTER | TITLE FL 107 - PH CONNECTION DETAILS - PH ROOF | DATE 4-1-70

REVISIONS

7-10-70
10-12-70

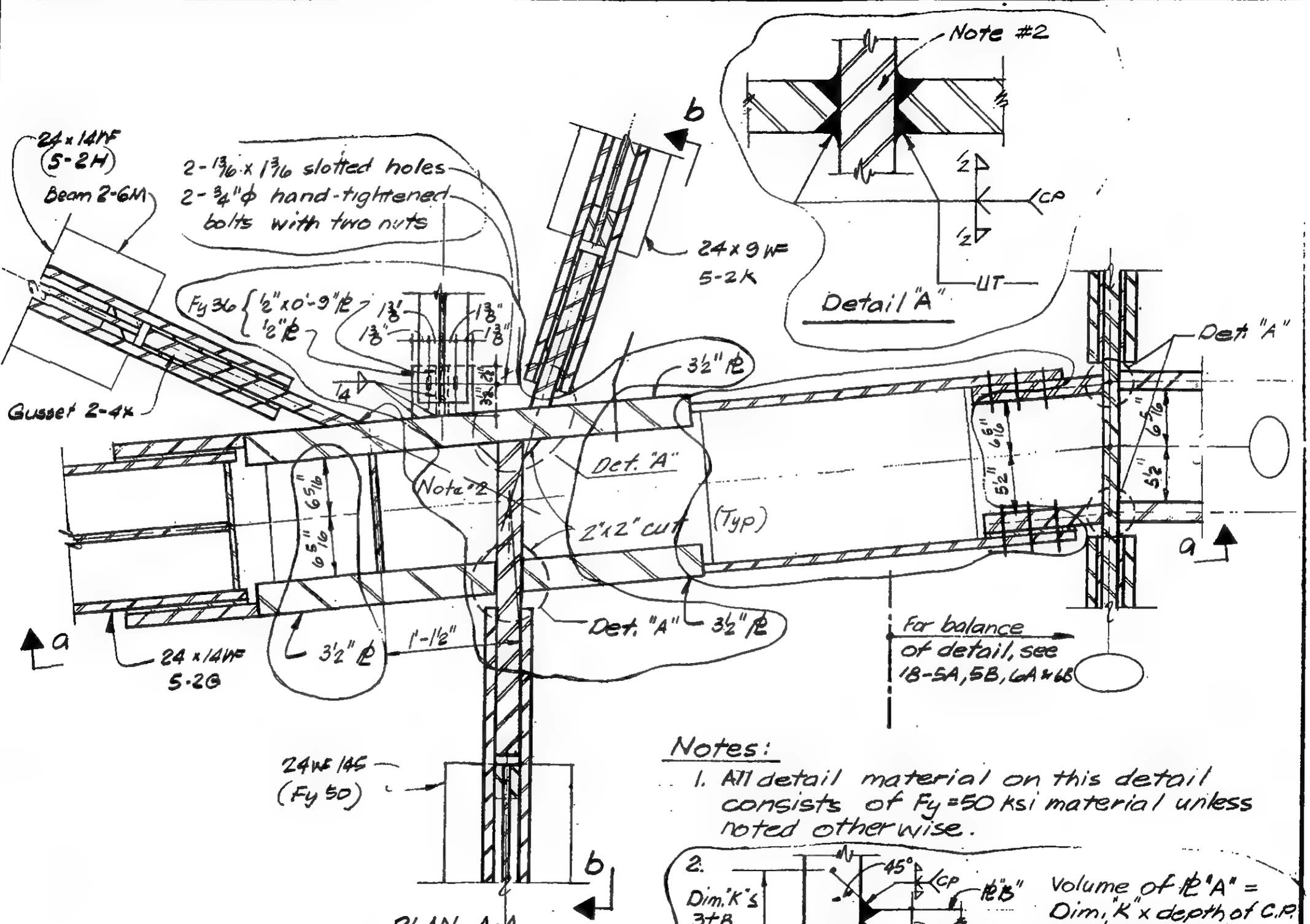

PLAN A-A

Detail 17-7A as shown
Detail 17-7B, C, D similar & as noted.

Notes:

1. All detail material on this detail consists of Fy = 50 ksi material unless noted otherwise.

2. 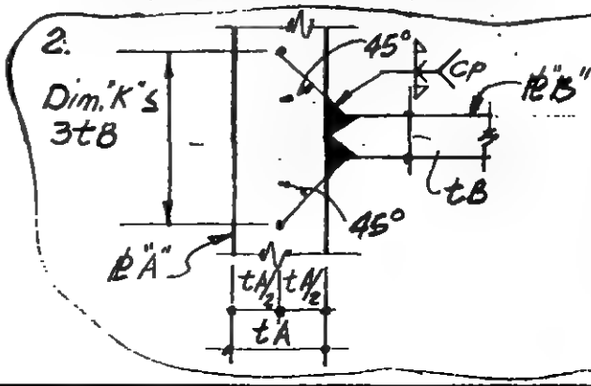

Volume of PL "A" = Dim. "K" x depth of C.P. weld, shall be free from gross internal discontinuities when tested in accordance with ASTM A435.

9 - A 17 - 7.1

LICENSED PROFESSIONAL ENGINEER — LESLIE E. ROBERTSON — No 34360 — UNIVERSITY OF THE STATE OF NEW YORK

DESIGNED

DRAWN
N. Clarke

REVIEWED

SKILLING, HELLE, CHRISTIANSEN, ROBERTSON — Structural & Civil Engineers

PROJECT THE WORLD TRADE CENTER | TITLE FL 107 - PH CONNECTION DETAILS - P H ROOF | DATE 4-1-70

REVISIONS

7-10-70
10-12-70

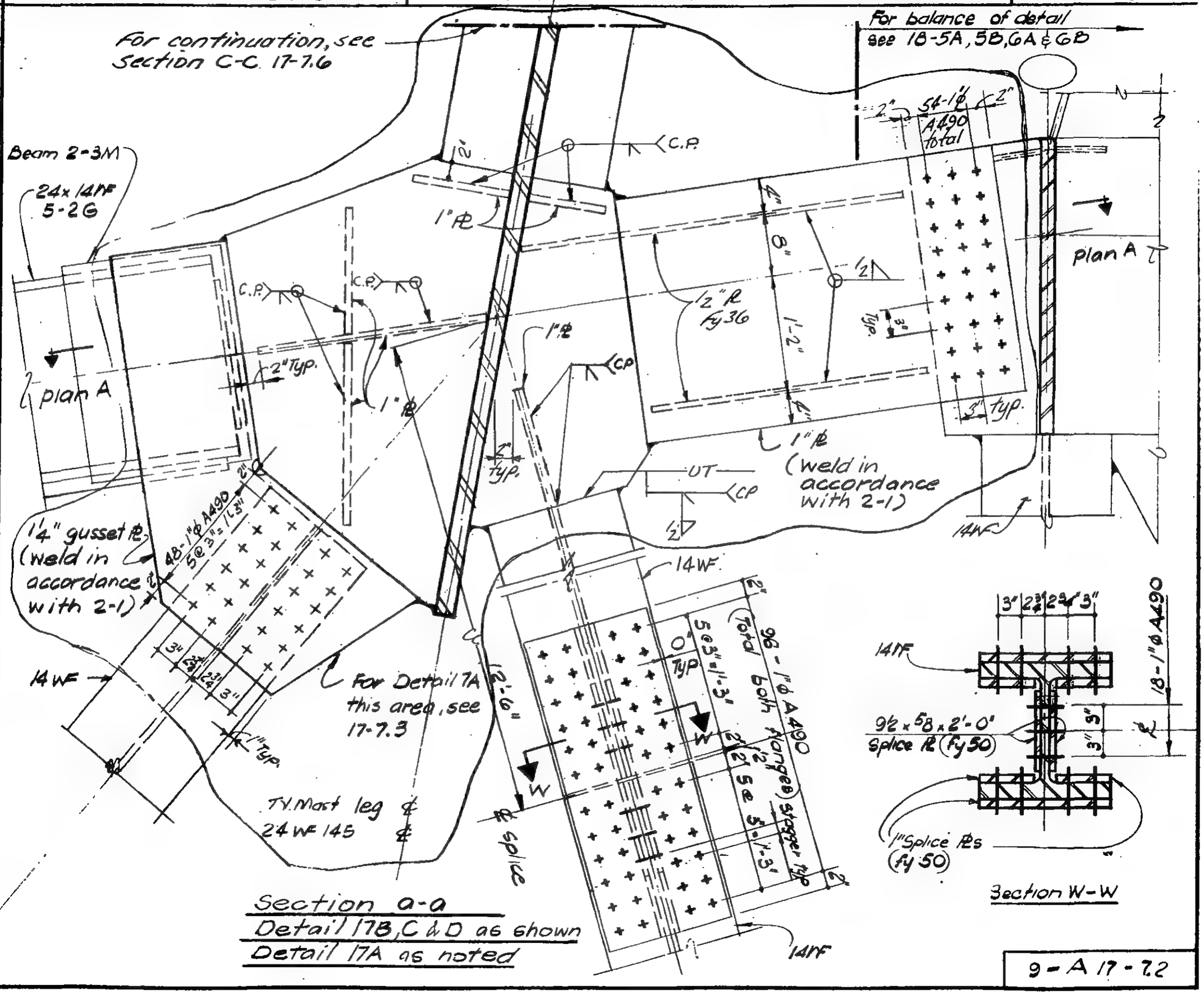

Section a-a
Detail 17B, C & D as shown
Detail 17A as noted

LICENSED PROFESSIONAL ENGINEER · LESLIE E. ROBERTSON · No. 34360 · UNIVERSITY OF THE STATE OF NEW YORK

DESIGNED

DRAWN W. Clarke

REVIEWED

9 - A 17 - 7.2

SKILLING, HELLE, CHRISTIANSEN, ROBERTSON — Structural & Civil Engineers

PROJECT THE WORLD TRADE CENTER | TITLE FL 107-PH CONNECTION DETAILS - PH ROOF | DATE 4-1-70

REVISIONS

7-10-70
10-12-70

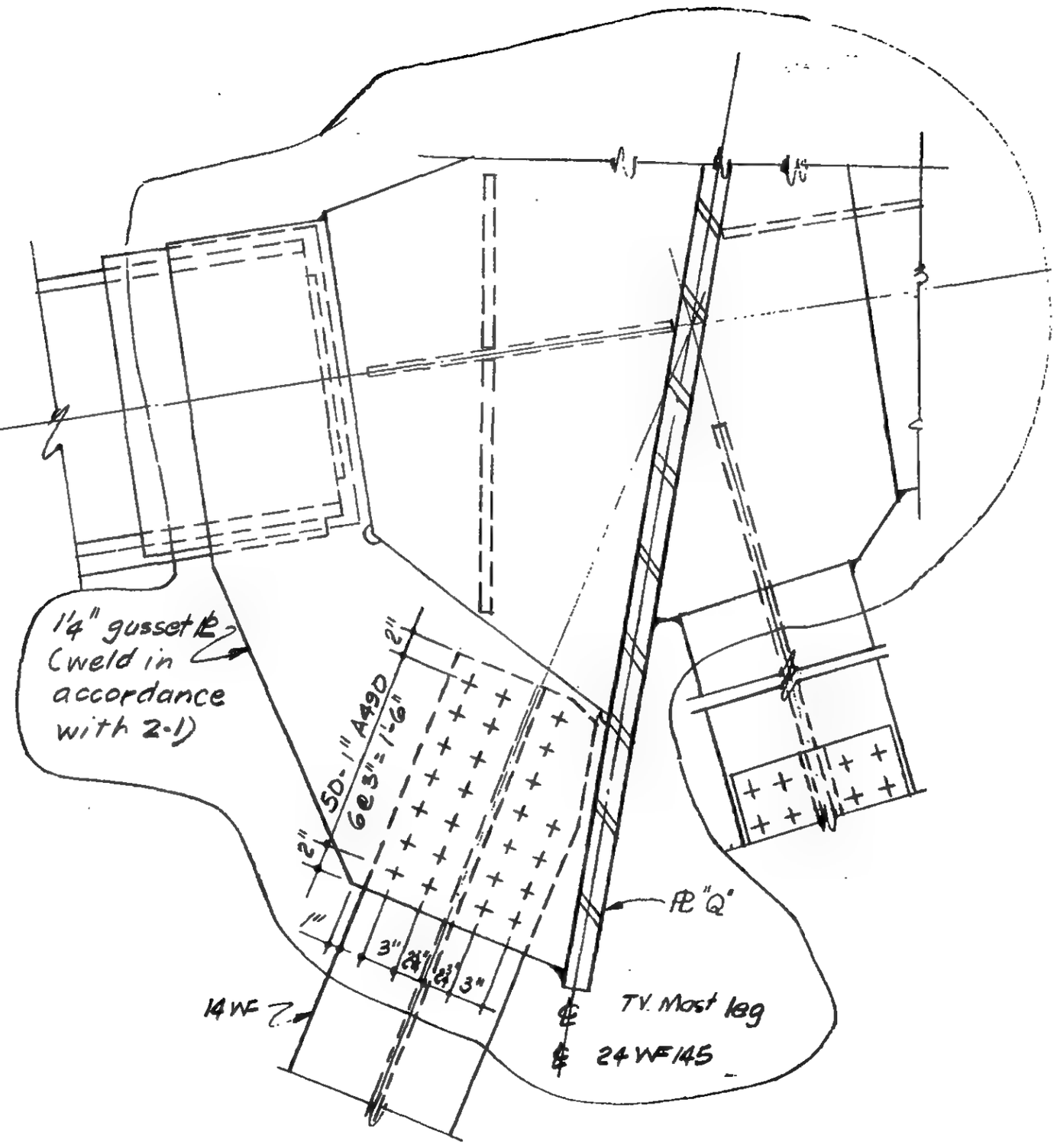

Section a-a
Detail 17-7A (For balance of Section, see 17-7.2)

LICENSED PROFESSIONAL ENGINEER
LESLIE E. ROBERTSON
No. 34560
UNIVERSITY OF THE STATE OF NEW YORK

DESIGNED

DRAWN

REVIEWED

9-A-17-7.3

SKILLING, HELLE, CHRISTIANSEN, ROBERTSON — Structural & Civil Engineers

PROJECT THE WORLD TRADE CENTER | TITLE FL 107 - PH CONNECTION DETAILS - PH ROOF | DATE 4-1-70

REVISIONS

7-10-70
10-12-70

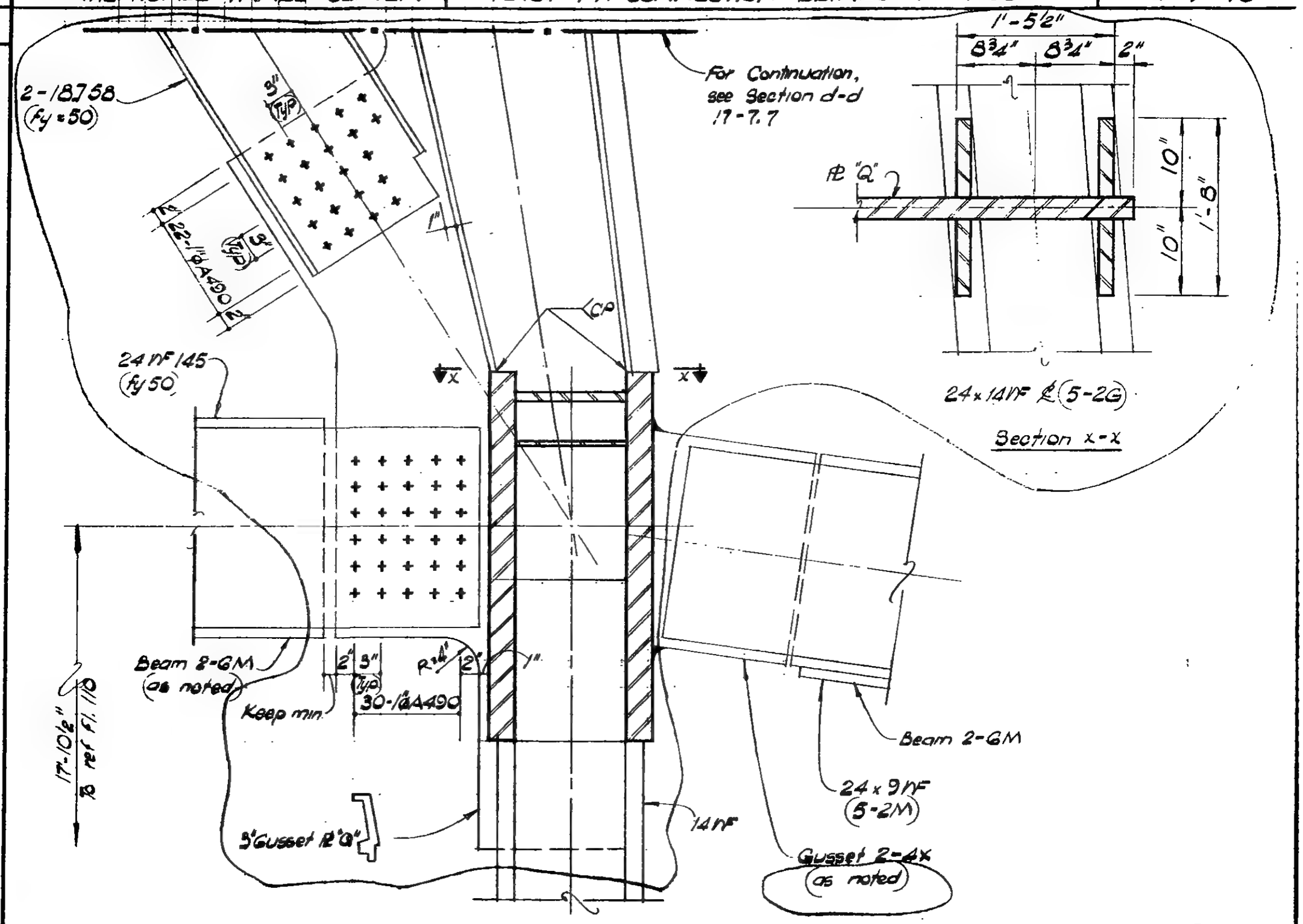

Section x-x

Section b-b

LICENSED PROFESSIONAL ENGINEER — LESLIE E. ROBERTSON — No. 34360 — UNIVERSITY OF THE STATE OF NEW YORK

DESIGNED

DRAWN W. Clarke

REVIEWED

9-A-17-7.4

SKILLING, HELLE, CHRISTIANSEN, ROBERTSON — Structural & Civil Engineers

PROJECT: THE WORLD TRADE CENTER | TITLE: FL 107 - PH CONNECTION DETAILS - PH ROOF | DATE: 10-12-70

REVISIONS

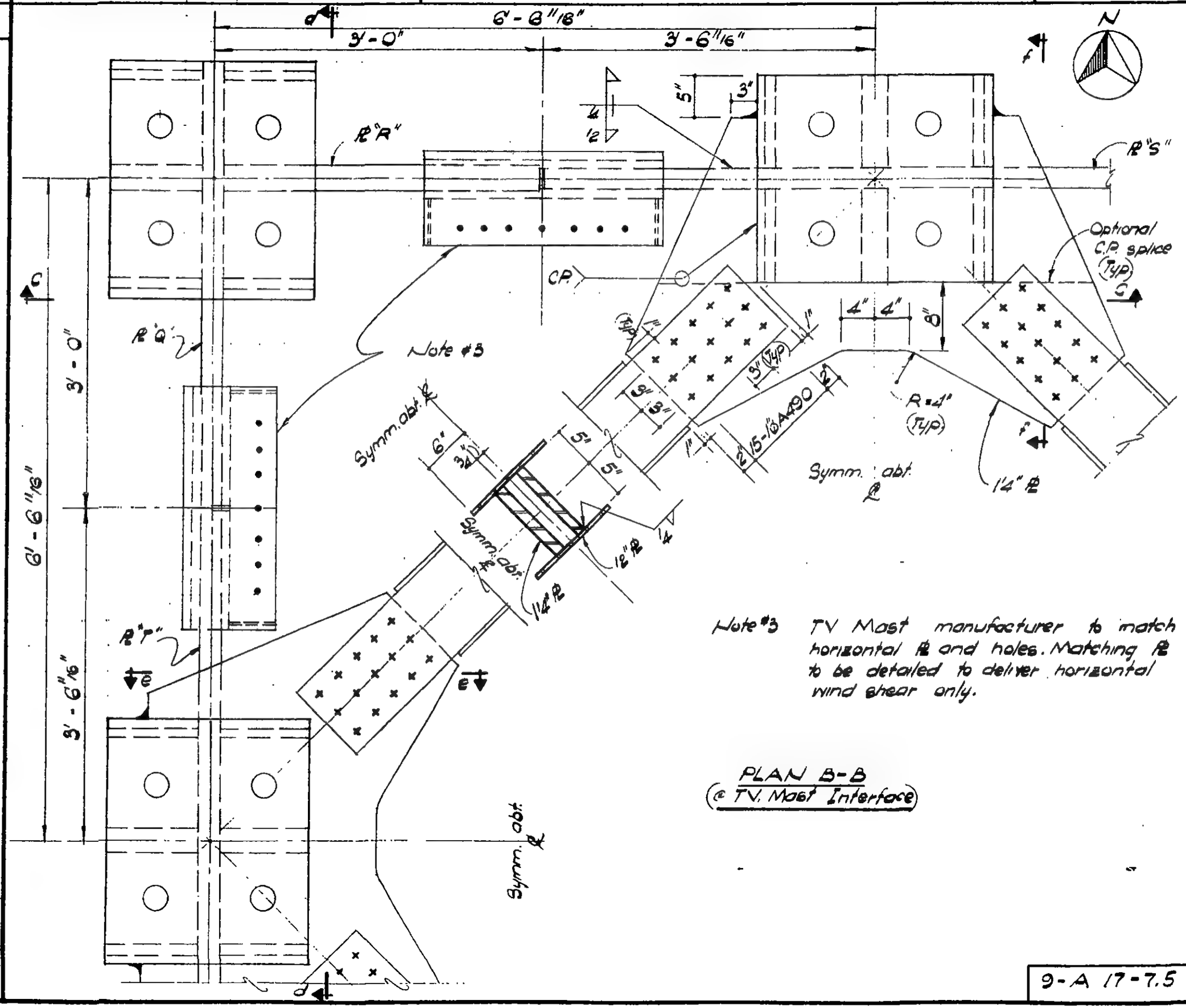

Note #3 TV Mast manufacturer to match horizontal ℄ and holes. Matching ℄ to be detailed to deliver horizontal wind shear only.

PLAN B-B
(@ TV. Mast Interface)

LICENSED PROFESSIONAL ENGINEER — LESLIE E. ROBERTSON — No. 34360 — UNIVERSITY OF THE STATE OF NEW YORK

DESIGNED

DRAWN
W. Clarke

REVIEWED

9-A 17-7.5

SKILLING, HELLE, CHRISTIANSEN, ROBERTSON — Structural & Civil Engineers

PROJECT THE WORLD TRADE CENTER | TITLE FL 107 - PH CONNECTION DETAILS - PH ROOF | DATE 10 - 12 - 70

REVISIONS

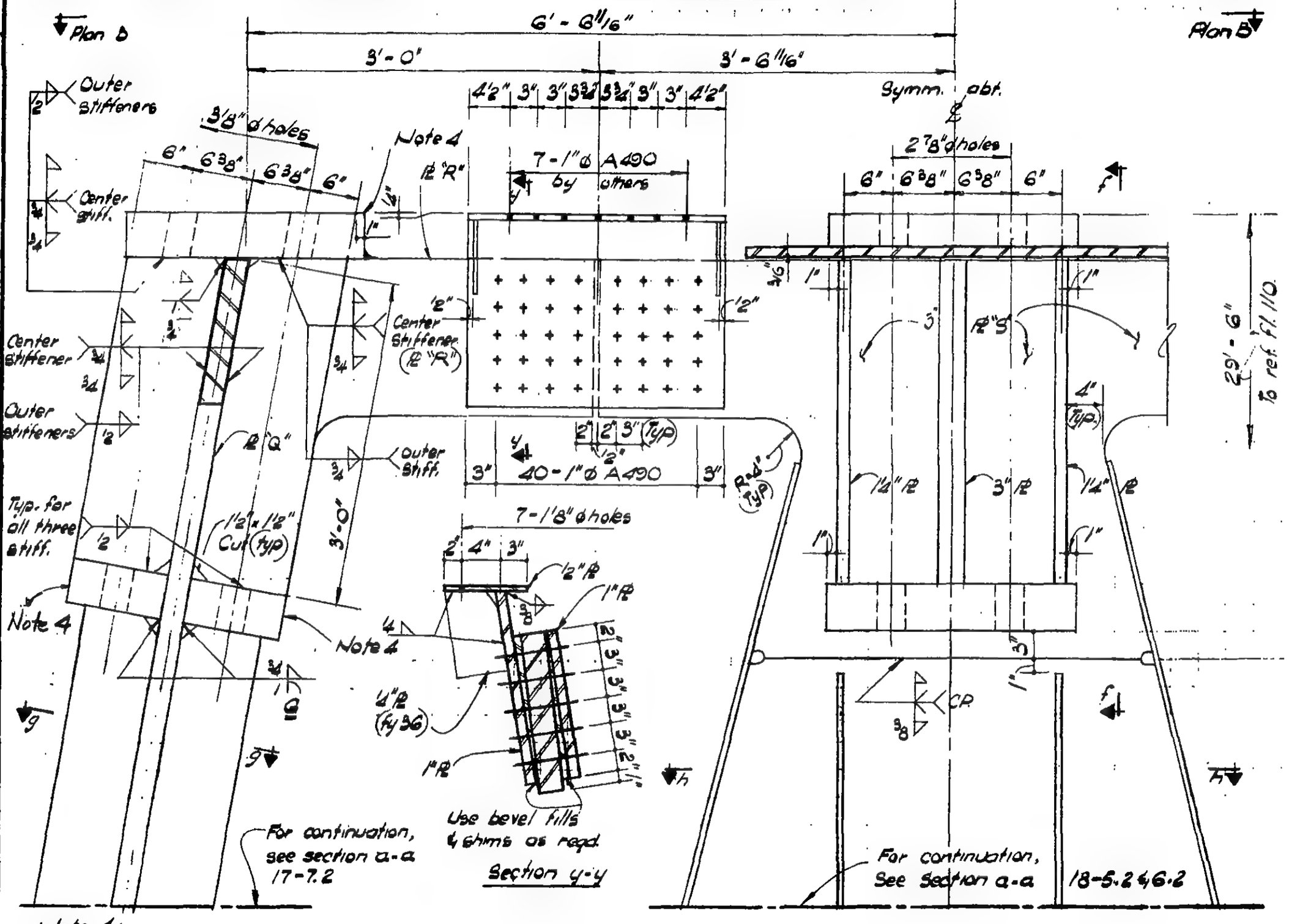

Note 4:
5" Thick stock ℄ (fy = 50ksi) shall be free of gross internal discontinuities. After milling, average thickness shall not be less than 4 1/2".

Section C-C

LICENSED PROFESSIONAL ENGINEER — LESLIE E. ROBERTSON — No. 34960 — UNIVERSITY OF THE STATE OF NEW YORK

DESIGNED

DRAWN W. Clarke

REVIEWED

9 - A 17 - 7.6

SKILLING, HELLE, CHRISTIANSEN, ROBERTSON — Structural & Civil Engineers

PROJECT: THE WORLD TRADE CENTER | TITLE: FL 107 - PH CONNECTION DETAILS - PH ROOF | DATE: 10-12-70

REVISIONS

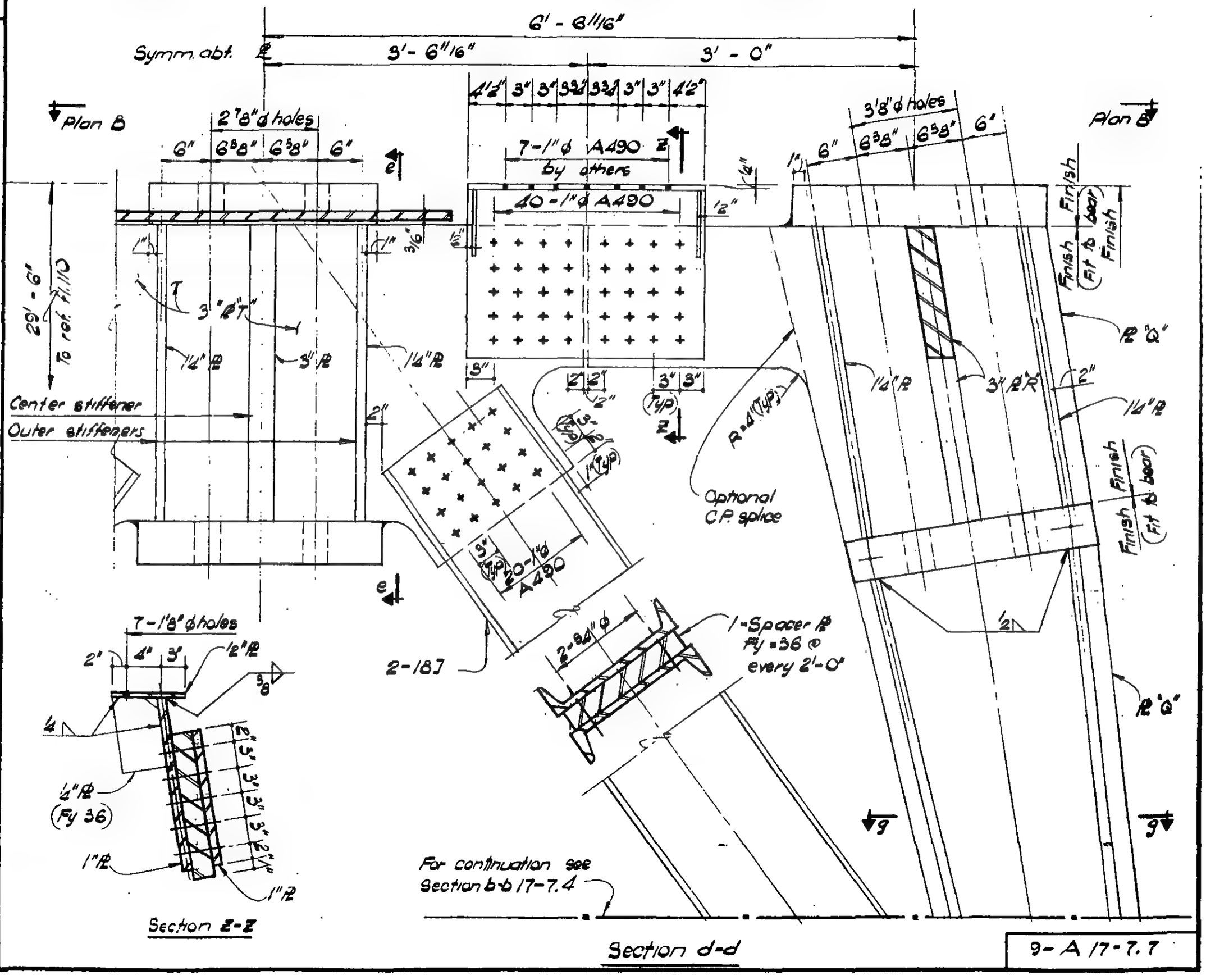

LICENSED PROFESSIONAL ENGINEER — LESLIE E. ROBERTSON — No. 34360 — UNIVERSITY OF THE STATE OF NEW YORK

DESIGNED

DRAWN: W. Clarke

REVIEWED

9-A 17-7.7

SKILLING, HELLE, CHRISTIANSEN, ROBERTSON — Structural & Civil Engineers

PROJECT: THE WORLD TRADE CENTER | TITLE: FL 107 - PH CONNECTION DETAILS - PH ROOF | DATE: 10-12-70

REVISIONS

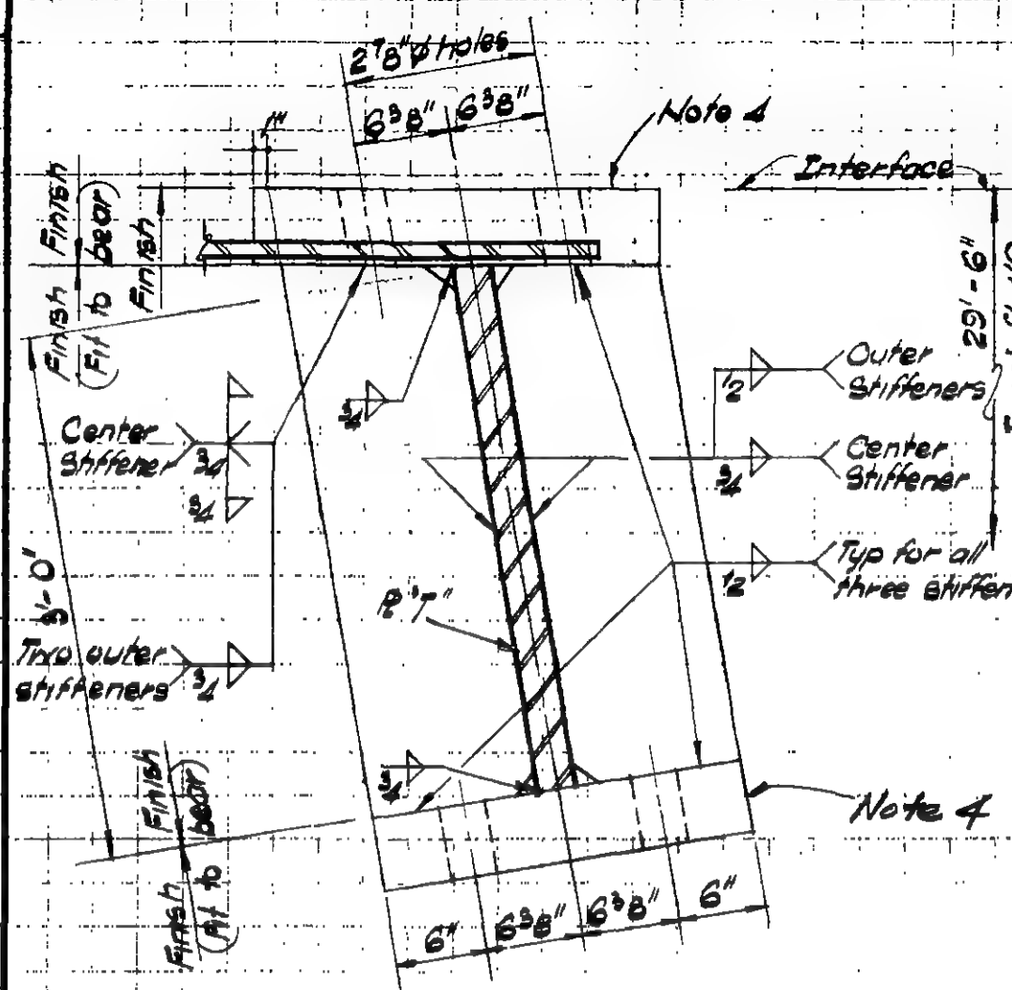

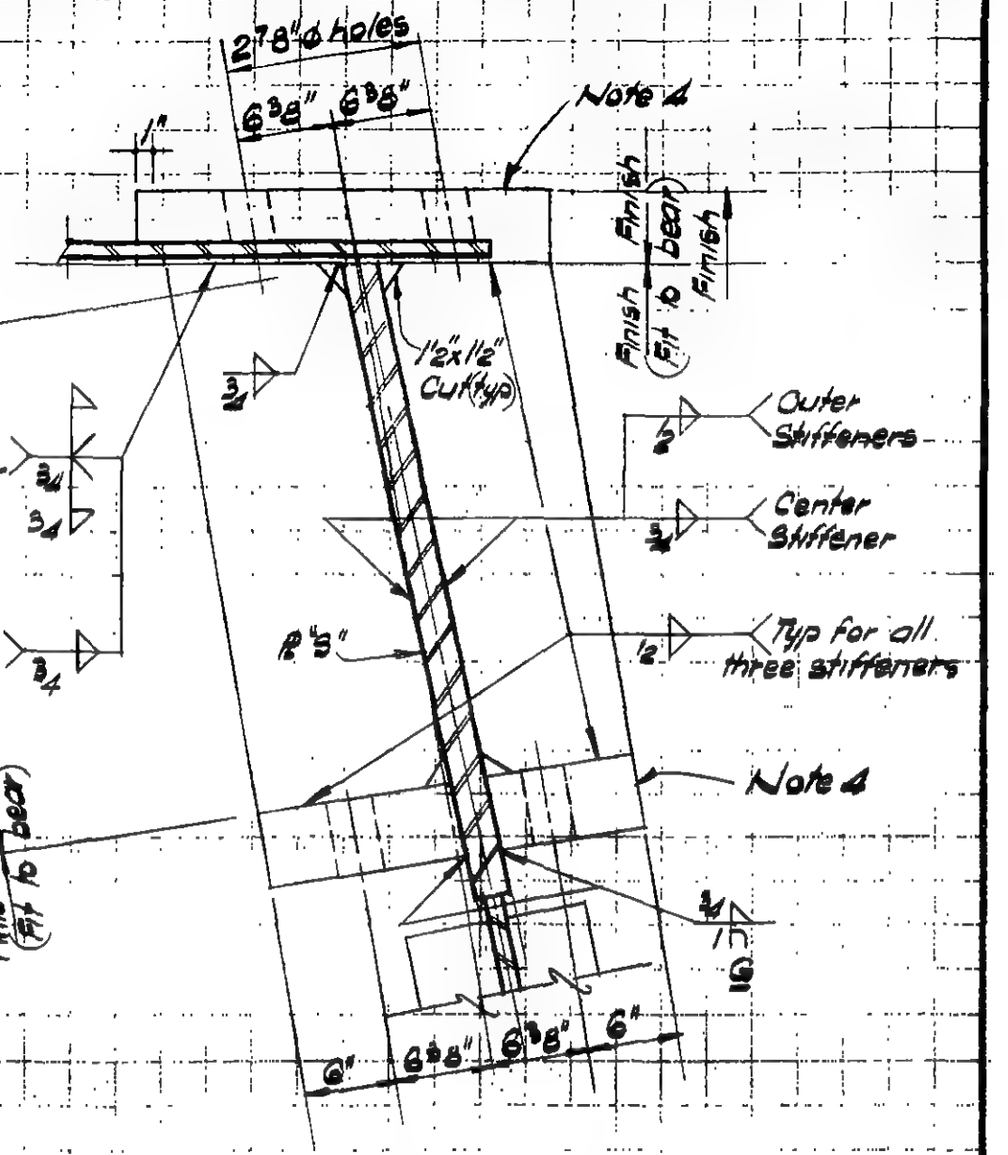

Section e-e

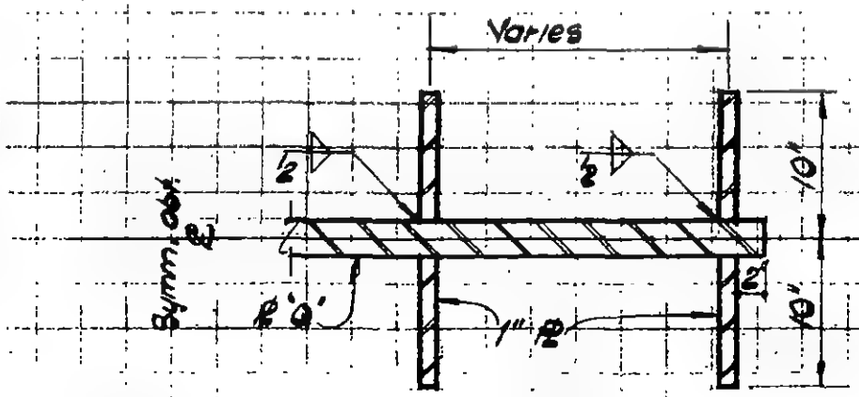

Section g-g

Section f-f

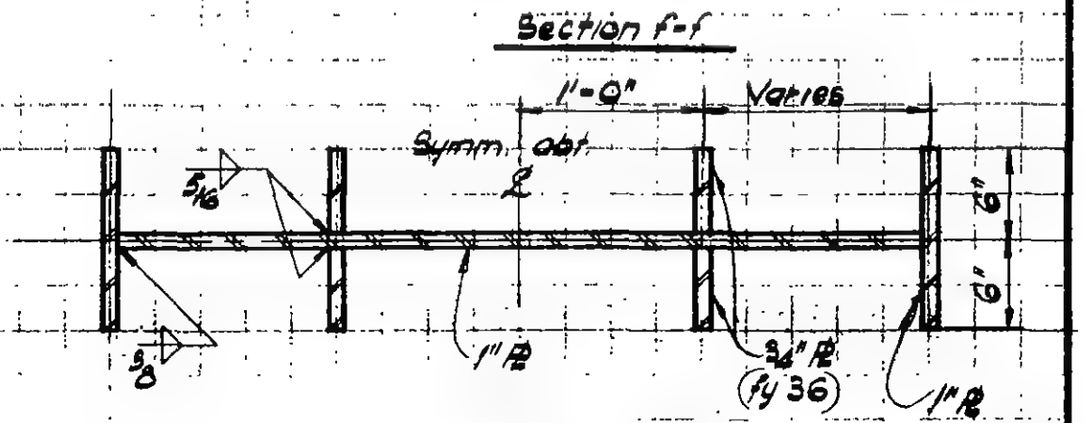

Section h-h

Note 4:
5" Thick stock R (fy = 50ksi) shall be free of gross internal discontinuities. After milling, average thickness shall not be less than 4 1/2".

LICENSED PROFESSIONAL ENGINEER — LESLIE E. ROBERTSON — No. 34360 — UNIVERSITY OF THE STATE OF NEW YORK

DESIGNED

DRAWN: W. Clarke

REVIEWED

D-A 17-7.8

SKILLING, HELLE, CHRISTIANSEN, ROBERTSON — Structural & Civil Engineers

PROJECT THE WORLD TRADE CENTER | TITLE FL 107 - PH CONNECTION DETAILS - PH ROOF | DATE 12/14/70

REVISIONS

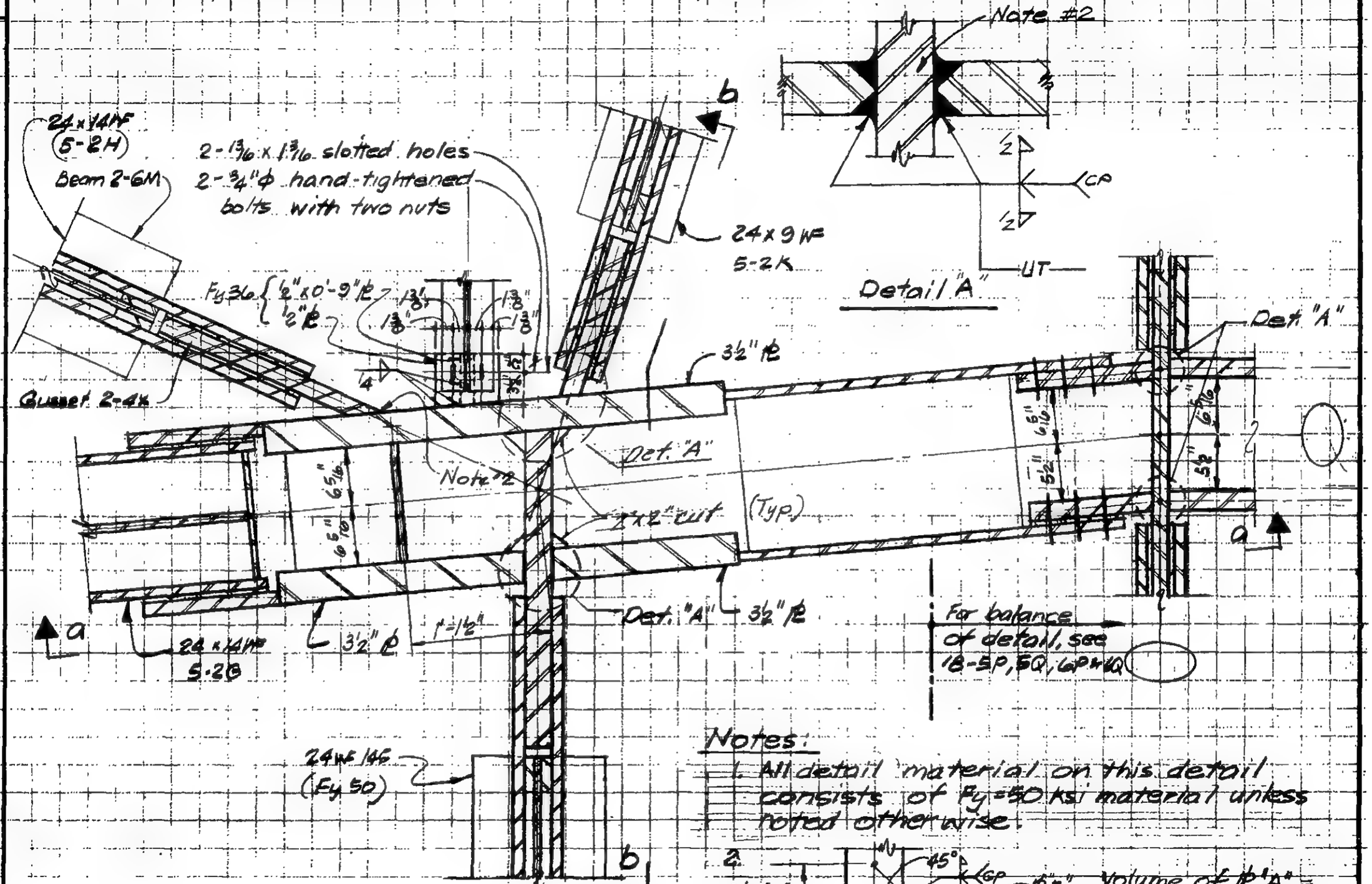

Notes:

1. All detail material on this detail consists of F_y = 50 ksi material unless noted otherwise.

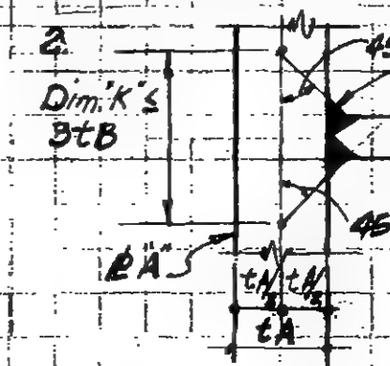

Volume of lg "A" = Dim. "K" x depth of C.P. weld shall be free from gross internal discontinuities when tested in accordance with ASTM A435.

9 - B 17 - 7.9

LICENSED PROFESSIONAL ENGINEER — LAWRIE E. ROBERTSON — NO. 34360 — UNIVERSITY OF THE STATE OF NEW YORK

DESIGNED

DRAWN M. Clarke

REVIEWED

SKILLING, HELLE, CHRISTIANSEN, ROBERTSON — Structural & Civil Engineers

PROJECT: THE WORLD TRADE CENTER | TITLE: FL 107 - PH CONNECTION DETAILS - PH ROOF | DATE: 12/14/79

REVISIONS

For balance of detail see 18-5P, 5Q, 6P & 6Q

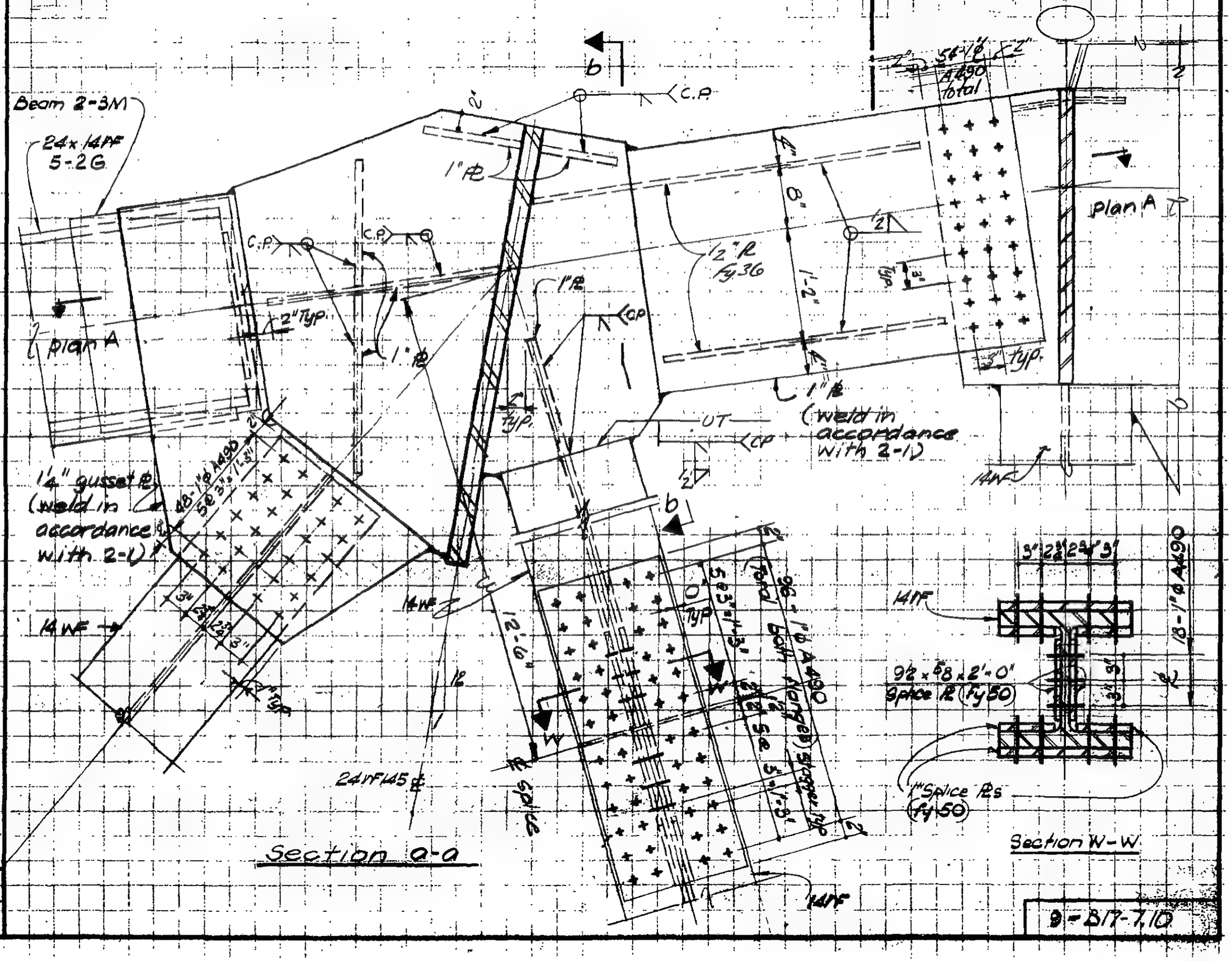

LICENSED PROFESSIONAL ENGINEER — LESLIE E. ROBERTSON — NO. 34960 — UNIVERSITY OF THE STATE OF NEW YORK

DESIGNED

DRAWN: M. Clarke

REVIEWED

SKILLING, HELLE, CHRISTIANSEN, ROBERTSON — Structural & Civil Engineers

PROJECT THE WORLD TRADE CENTER | TITLE FL 107 - PH CONNECTION DETAILS - PH ROOF | DATE 12/14/70

REVISIONS

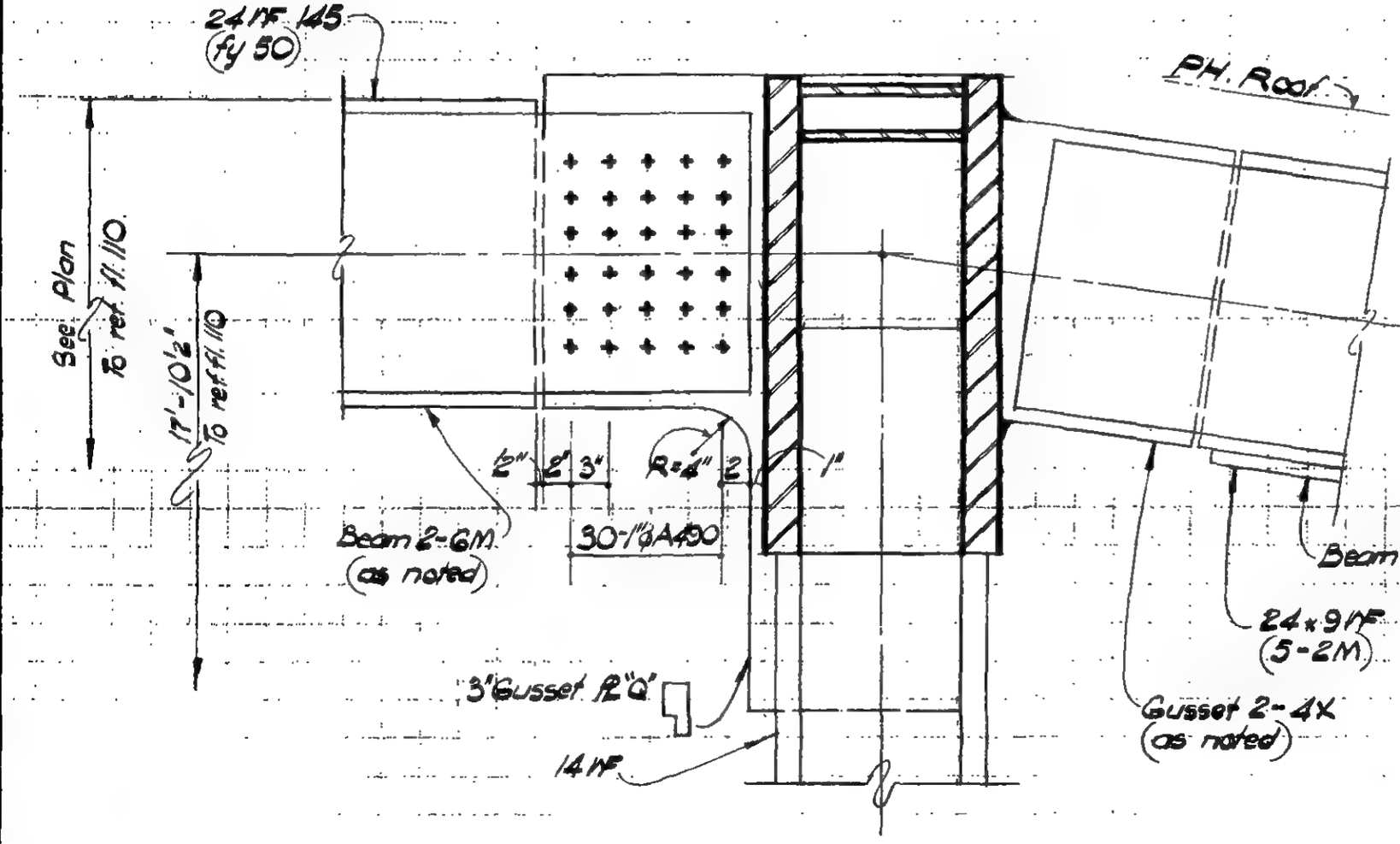

Section b-b

LICENSED PROFESSIONAL ENGINEER
LESLIE E. ROBERTSON
No. 34360
UNIVERSITY OF THE STATE OF NEW YORK

DESIGNED

DRAWN
W. Clarke

REVIEWED

9-B/7-7.11

SKILLING, HELLE, CHRISTIANSEN, ROBERTSON — Structural & Civil Engineers

PROJECT: THE WORLD TRADE CENTER | TITLE: FL 107 - PH CONNECTION DETAIL - PH ROOF | DATE: 7-10-70

REVISIONS

VOID ~~9/25/70~~ 7/10/70

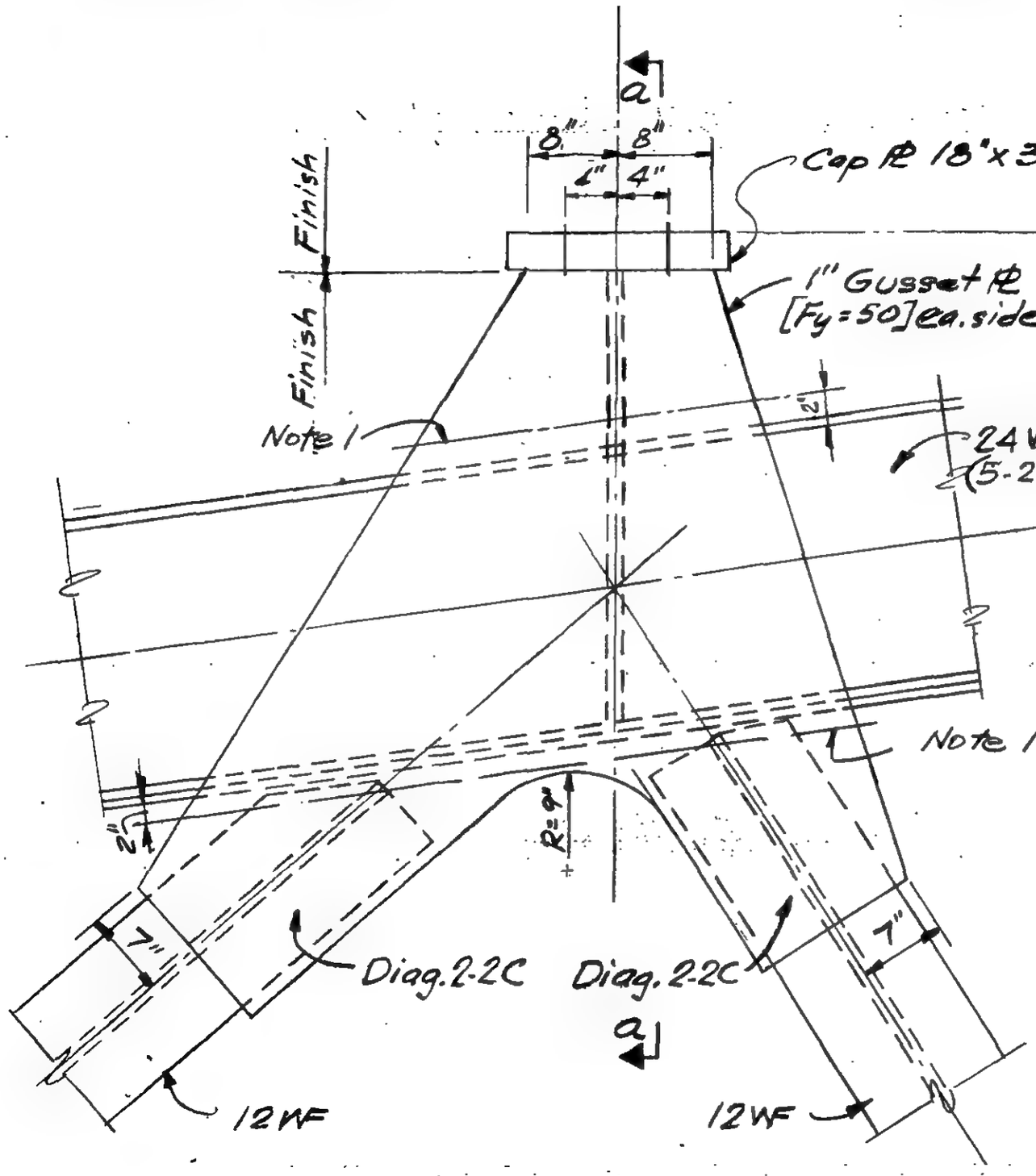

Detail 17-10A

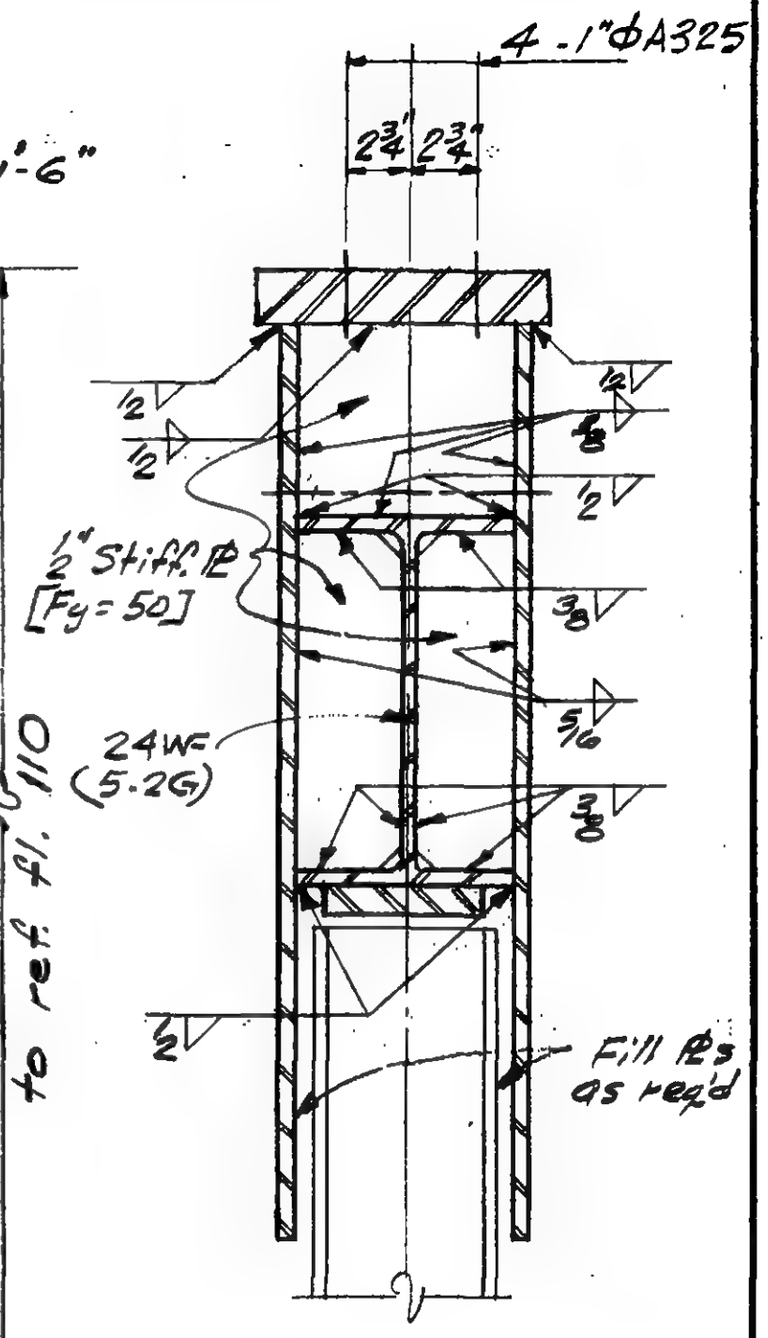

Section a-a

LICENSED PROFESSIONAL ENGINEER
LESLIE E. ROBERTSON
No 34360
UNIVERSITY OF THE STATE OF NEW YORK

DESIGNED

DRAWN

REVIEWED

9-AB17-10.1

SKILLING, HELLE, CHRISTIANSEN, ROBERTSON — Structural & Civil Engineers

PROJECT: THE WORLD TRADE CENTER | TITLE: FL 107 – PH CONNECTION DETAIL - PH ROOF | DATE: 7/10/70

REVISIONS

~~VOID 9/25/70~~
7/10/70

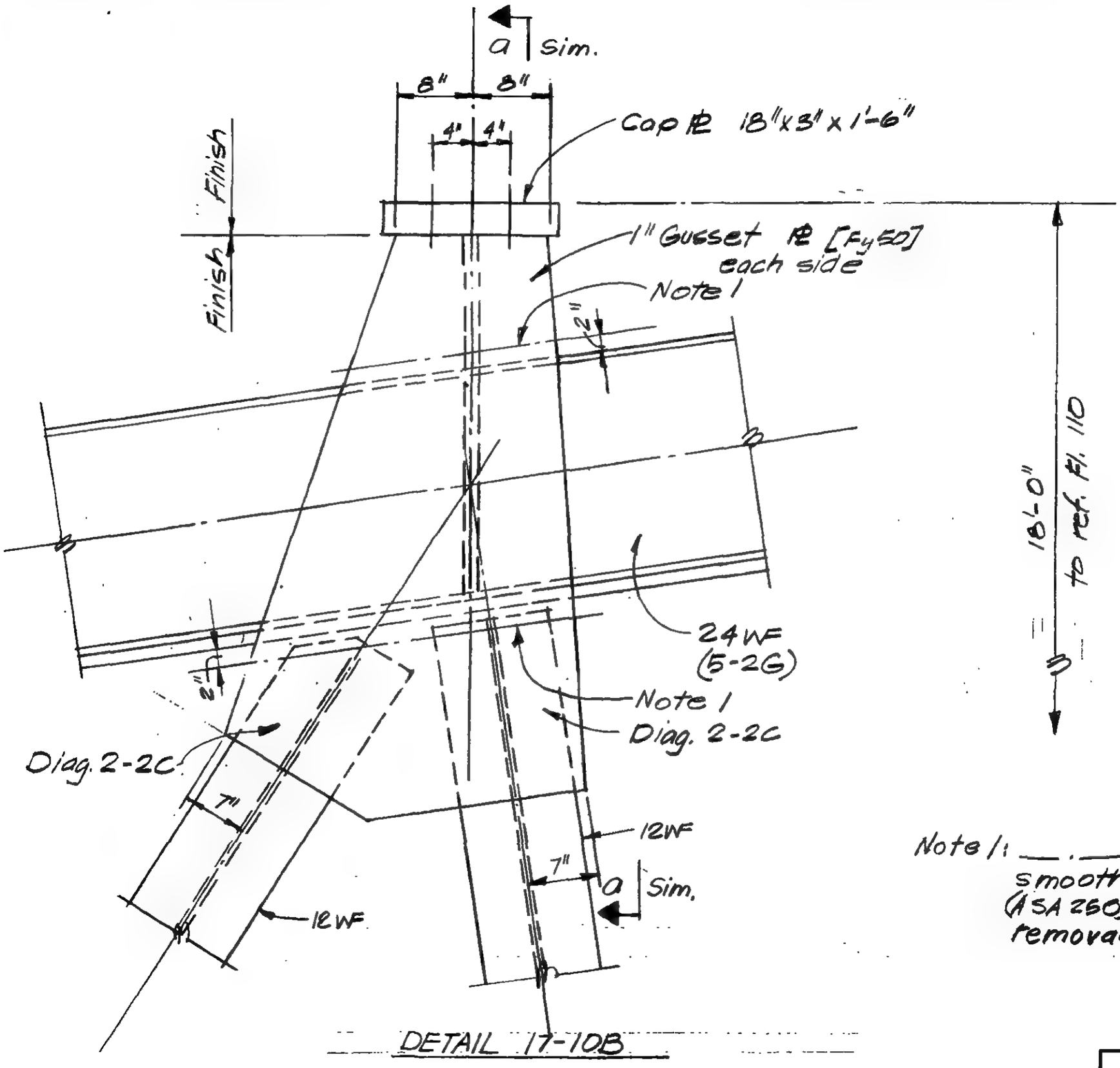

Note 1: ——.——.—— Indicates smooth notch-free (ASA 250) cut following removal of derrick.

DETAIL 17-10B

LICENSED PROFESSIONAL ENGINEER — LESLIE E. ROBERTSON — No 34960 — UNIVERSITY OF THE STATE OF NEW YORK

DESIGNED: Brewer
DRAWN: P. Ozeki
REVIEWED:

9-AB 17-10.2

SKILLING, HELLE, CHRISTIANSEN, ROBERTSON — Structural & Civil Engineers

PROJECT: THE WORLD TRADE CENTER | TITLE: FLOOR 107-PH CONNECTION DETAILS-LINES 004 & 005 | DATE: 4-1-70

REVISIONS

6-16-70
12/14/70

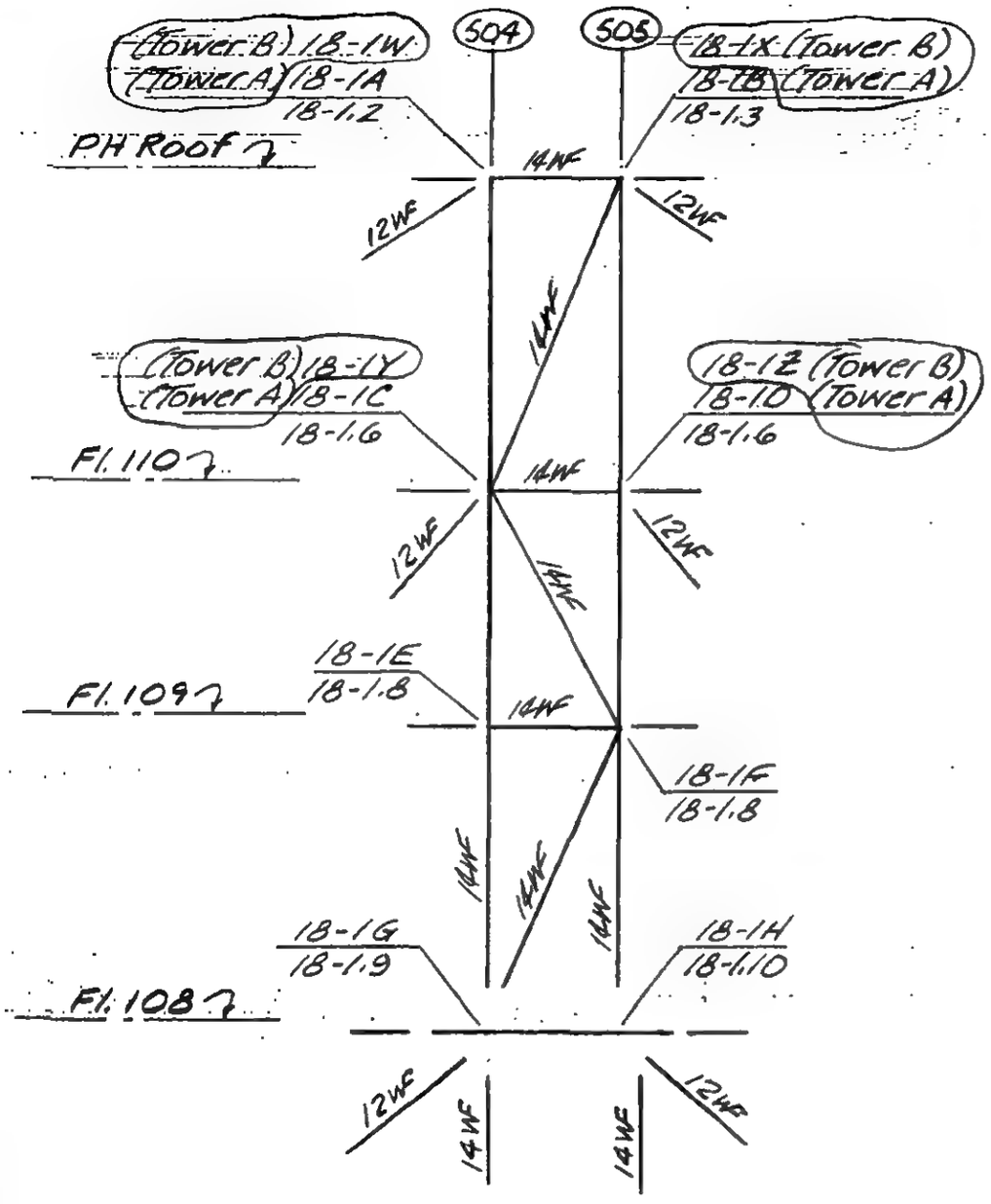

Detail 18-1

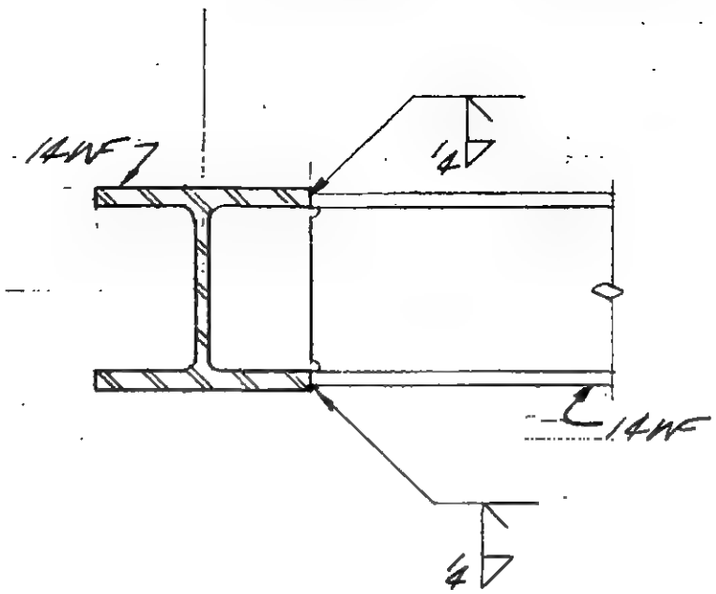

Detail (1)

LICENSED PROFESSIONAL ENGINEER — LESLIE E. ROBERTSON — No 34360 — UNIVERSITY OF THE STATE OF NEW YORK

DESIGNED: H. Goll
DRAWN: J. Adams
REVIEWED: E. Drakos

9-AB 18-1.1

SKILLING, HELLE, CHRISTIANSEN, ROBERTSON — Structural & Civil Engineers

PROJECT: THE WORLD TRADE CENTER | TITLE: FLOOR 107-PH CONNECTION DETAILS-LINES 004&005 | DATE: 4-1-70

REVISIONS

6-16-70
7-13-70
12-14-70

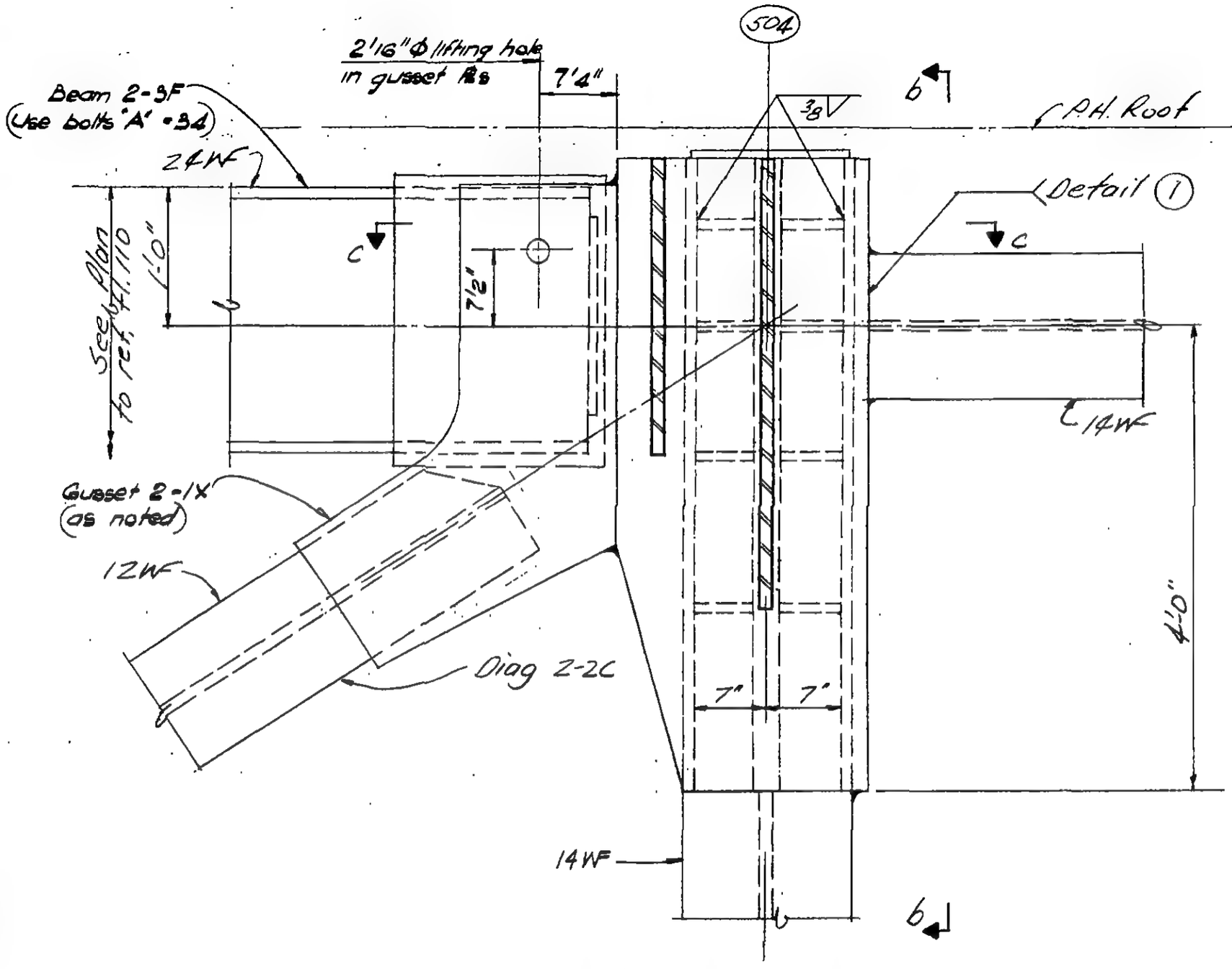

Section a-a

Detail 18-1A & 18-1W

LICENSED PROFESSIONAL ENGINEER — LESLIE E. ROBERTSON — No. 34960 — UNIVERSITY OF THE STATE OF NEW YORK

DESIGNED A. Gross
DRAWN J. Adams
REVIEWED E. Drakos

9-AB18-1.2

SKILLING, HELLE, CHRISTIANSEN, ROBERTSON — Structural & Civil Engineers

PROJECT: THE WORLD TRADE CENTER | TITLE: FLOOR 107-PH CONNECTION DETAILS-LINES 004 & 005 | DATE: 4-1-70

REVISIONS

6-16-70
7-13-70
12-14-70

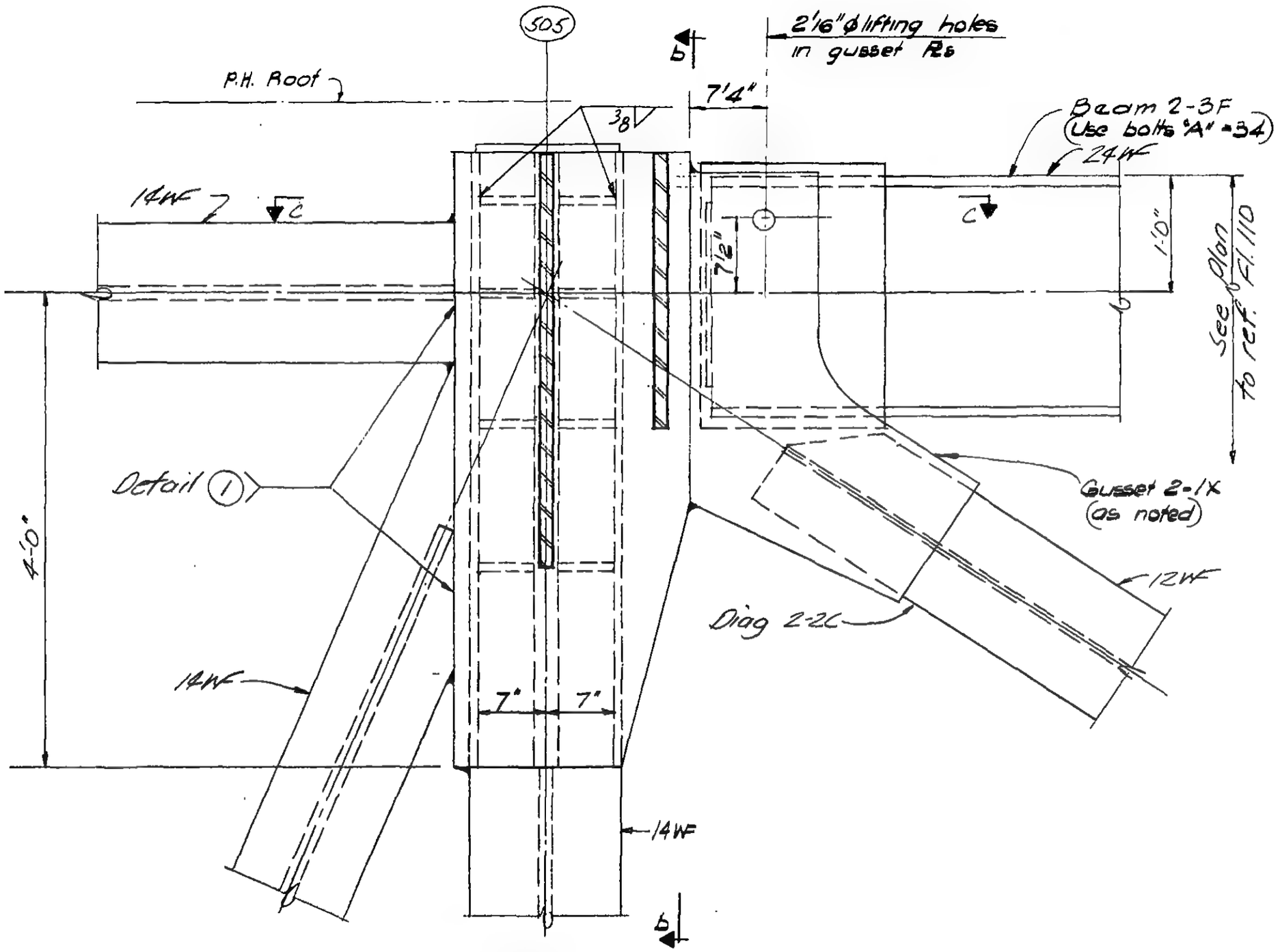

Section a-a

Detail 18-1B & 18-1X

LICENSED PROFESSIONAL ENGINEER — LESLIE E. ROBERTSON — No 34360 — UNIVERSITY OF THE STATE OF NEW YORK

DESIGNED: N. Boash
DRAWN: S. Adams
REVIEWED: E. Dracos

9-AB18-1.3

SKILLING, HELLE, CHRISTIANSEN, ROBERTSON — Structural & Civil Engineers

PROJECT: THE WORLD TRADE CENTER | TITLE: FLOOR 107-PH CONNECTION DETAILS - LINES 004 & 005 | DATE: 4-1-70

REVISIONS

6-16-70
12-14-70

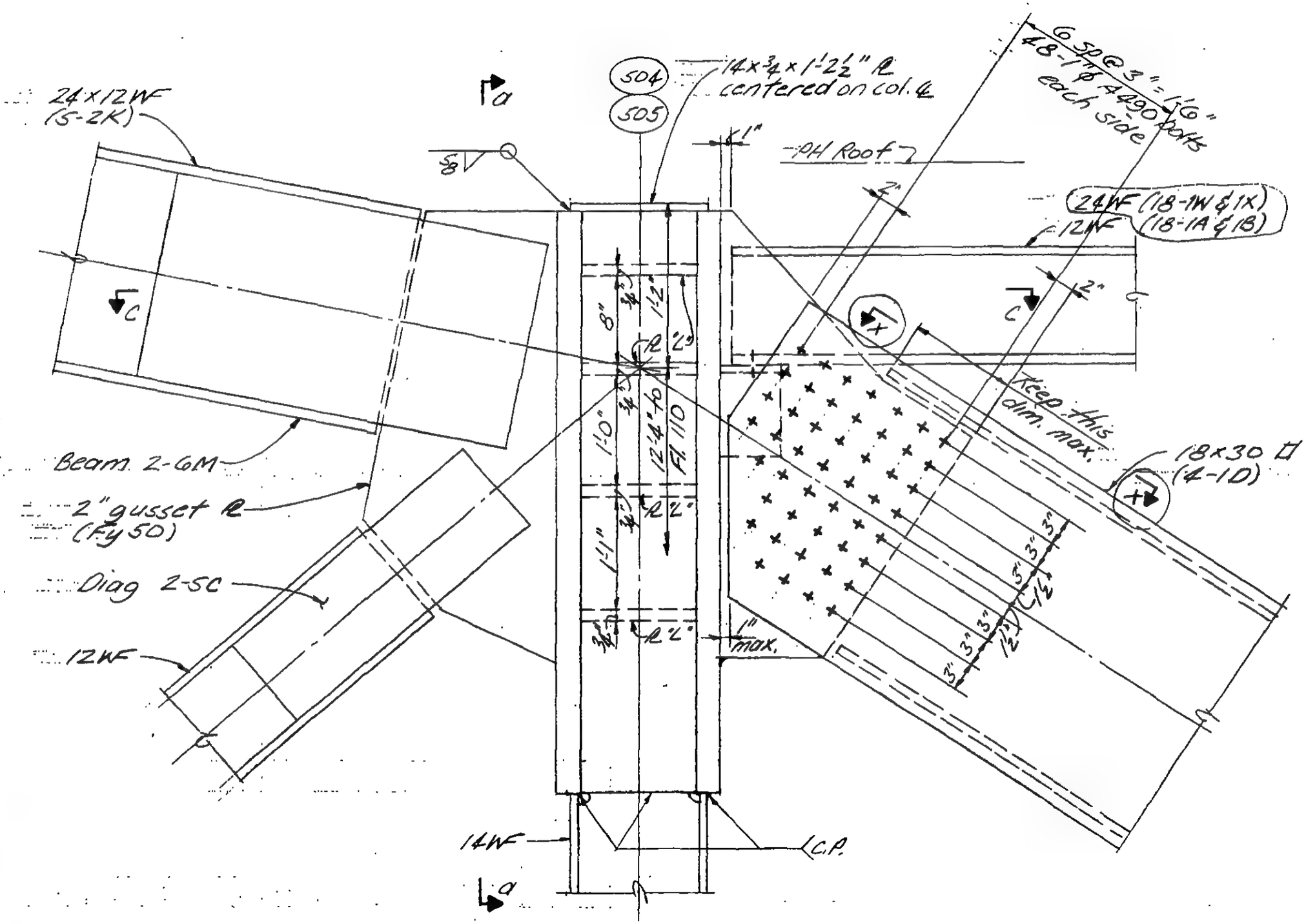

Section b-b

LICENSED PROFESSIONAL ENGINEER — LESLIE E. ROBERTSON — No. 34360 — UNIVERSITY OF THE STATE OF NEW YORK

DESIGNED: E. Gow
DRAWN: J. Adams
REVIEWED: E. Drakos

9-AB18-1.4

SKILLING, HELLE, CHRISTIANSEN, ROBERTSON — Structural & Civil Engineers

PROJECT: THE WORLD TRADE CENTER | TITLE: FL 107-PH CONNECTION DETAILS | DATE: 4-1-70

...VISIONS

...-16-70
12/14/70

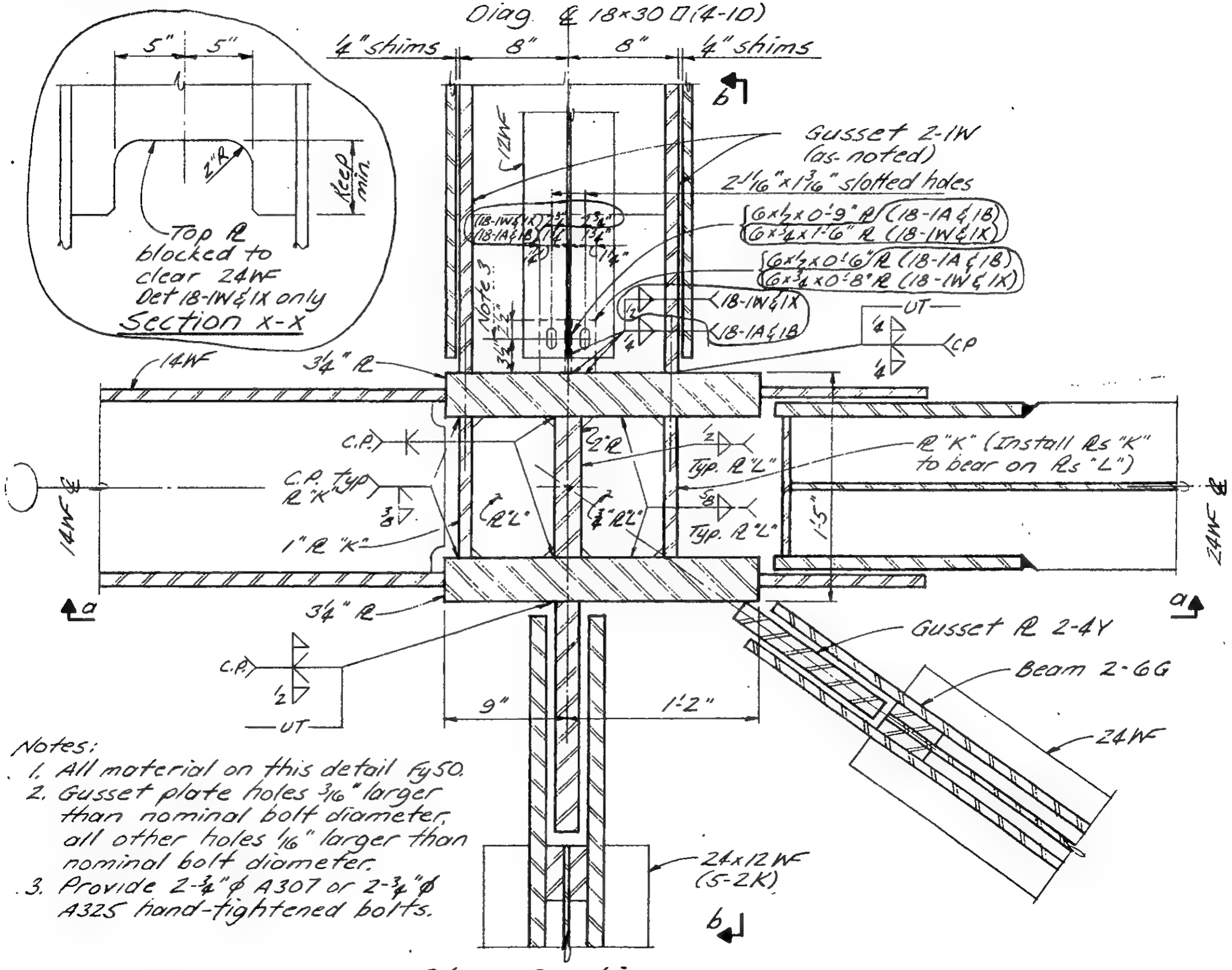

Notes:
1. All material on this detail Fy50.
2. Gusset plate holes 3/16" larger than nominal bolt diameter, all other holes 1/16" larger than nominal bolt diameter.
3. Provide 2-3/4"ϕ A307 or 2-3/4"ϕ A325 hand-tightened bolts.

Plan Section C-C
Col. 505 as shown
Col 504 opp. hand

...PROFESSIONAL ENGINEER ...LIE E. ROBERTSON No 34360 ...OF THE STATE OF NEW YORK

DESIGNED: A. Boss
DRAWN: Adams
REVIEWED: Drakos

9-AB18-1.5

SKILLING, HELLE, CHRISTIANSEN, ROBERTSON — Structural & Civil Engineers

PROJECT: THE WORLD TRADE CENTER | TITLE: FLOOR 107-PH CONNECTION DETAILS-LINES 004 & 005 | DATE: 4-1-70

REVISIONS

6-16-70
12/14/70

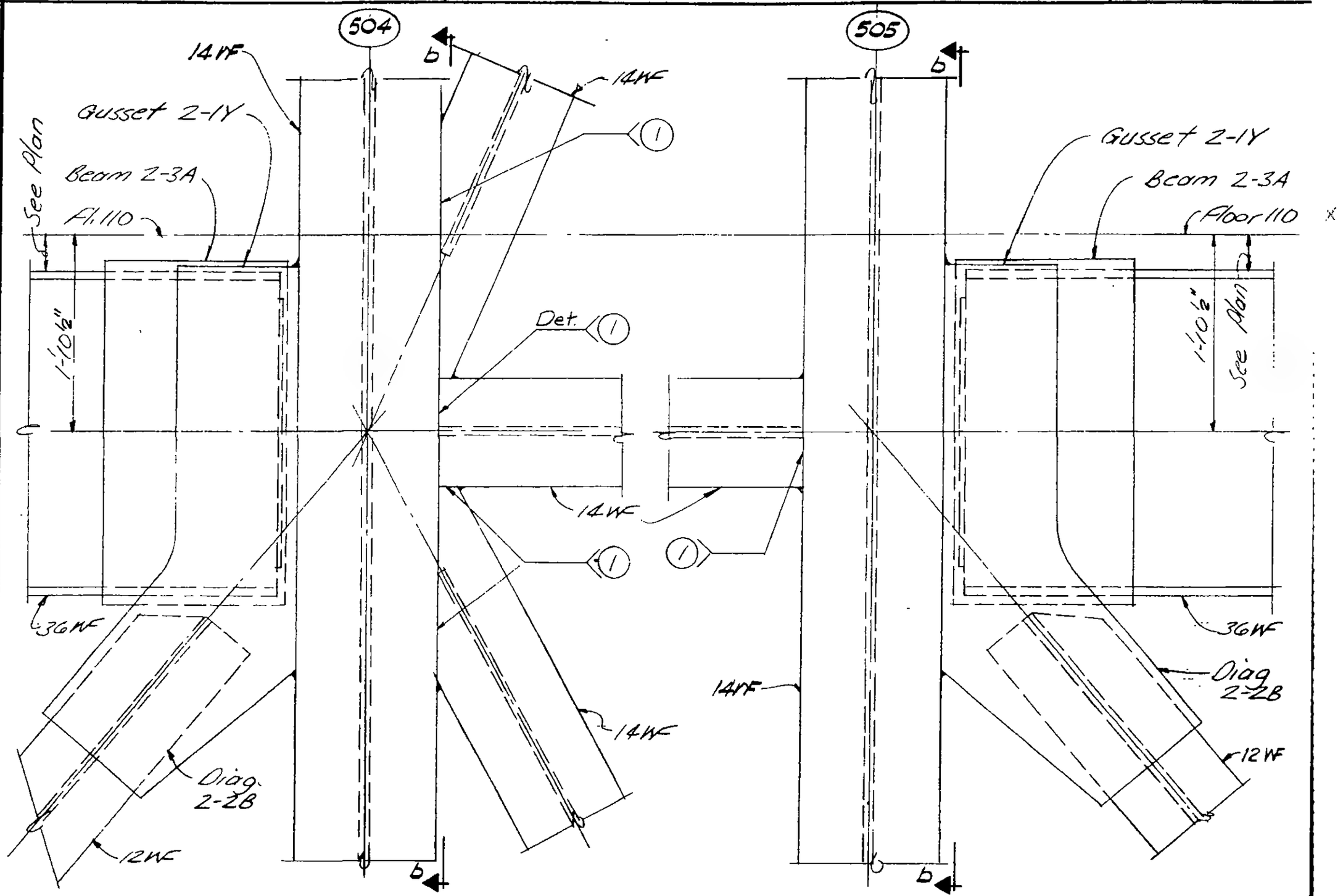

Section a - a

DETAIL 18-1C & 18-1Y

Section a - a

DETAIL 18-1D & 18-1Z

LICENSED PROFESSIONAL ENGINEER — LESLIE E. ROBERTSON — No. 34360 — UNIVERSITY OF THE STATE OF NEW YORK

DESIGNED: H. Brown
DRAWN: J. Adams
REVIEWED: E. Drakos

9-AB18-1.6

SKILLING, HELLE, CHRISTIANSEN, ROBERTSON — Structural & Civil Engineers

PROJECT: THE WORLD TRADE CENTER | TITLE: FLOOR 107 - PH CONNECTION DETAILS-LINES 004 & 005 | DATE: 4-1-70

REVISIONS

6-16-70
12/14/70

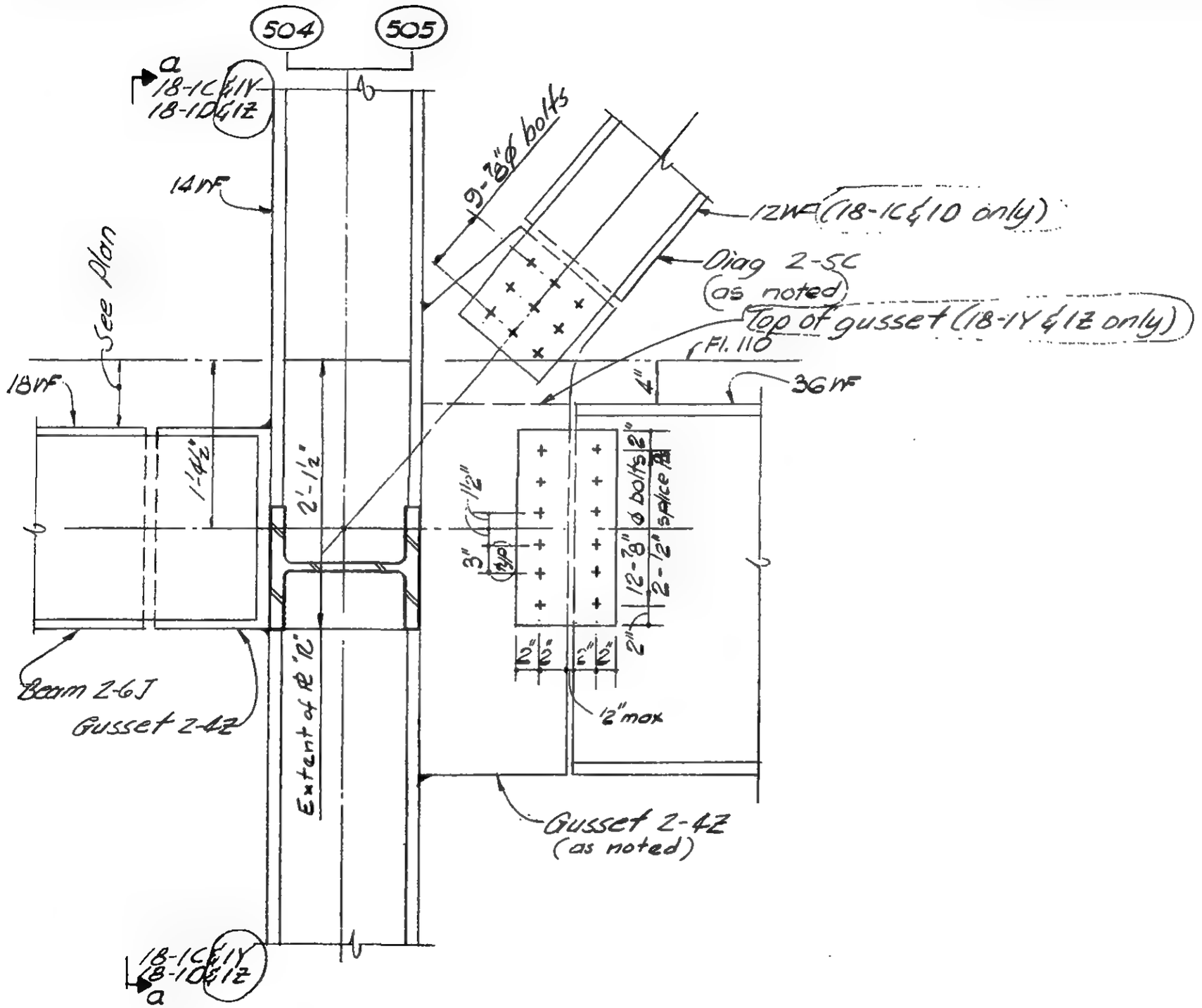

Section b-b

LICENSED PROFESSIONAL ENGINEER — LESLIE E. ROBERTSON — No. 34360 — UNIVERSITY OF THE STATE OF NEW YORK

DESIGNED: J. Boyr
DRAWN: J. Adams
REVIEWED: E. Drakos

9-AB18-1.7

SKILLING, HELLE, CHRISTIANSEN, ROBERTSON — Structural & Civil Engineers

PROJECT THE WORLD TRADE CENTER | TITLE FL 107 - PH CONNECTION DETAILS-LINES 004&005 | DATE 4-1-70

REVISIONS

6-16-70

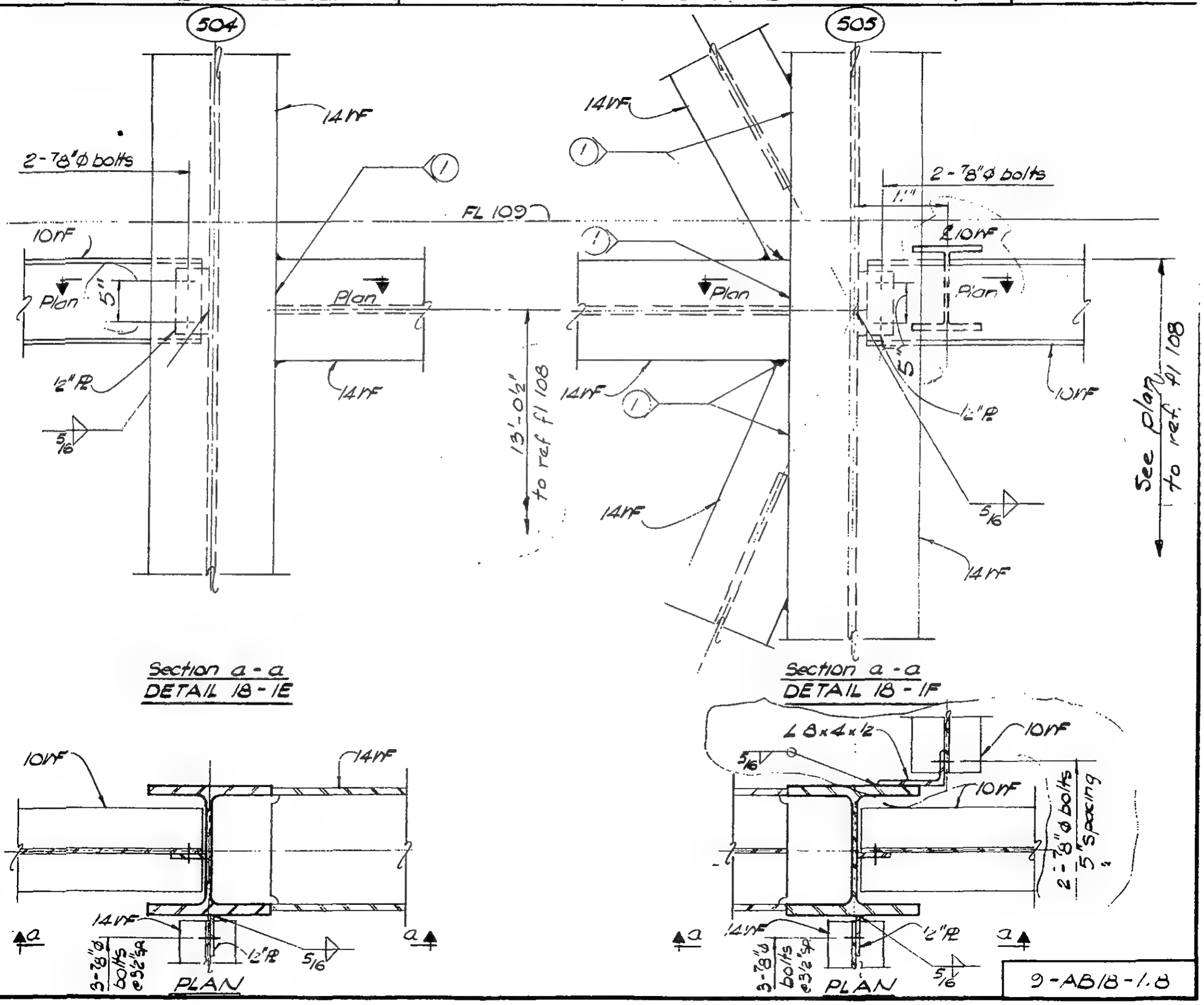

Section a-a
DETAIL 18-1E

Section a-a
DETAIL 18-1F

LICENSED PROFESSIONAL ENGINEER
LESLIE E. ROBERTSON
No. 34360
UNIVERSITY OF THE STATE OF NEW YORK

DESIGNED
DRAWN W. Clarke
REVIEWED E. Orakos

9-AB18-1.8

SKILLING, HELLE, CHRISTIANSEN, ROBERTSON — Structural & Civil Engineers

PROJECT: THE WORLD TRADE CENTER | TITLE: FL 107 - PH. CONNECTION DETAILS - LINES 04 & 05 | DATE: 4-1-70

REVISIONS

5/27/70
7/8/70

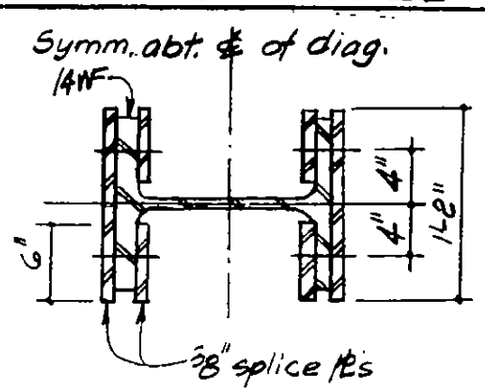

Section X-X

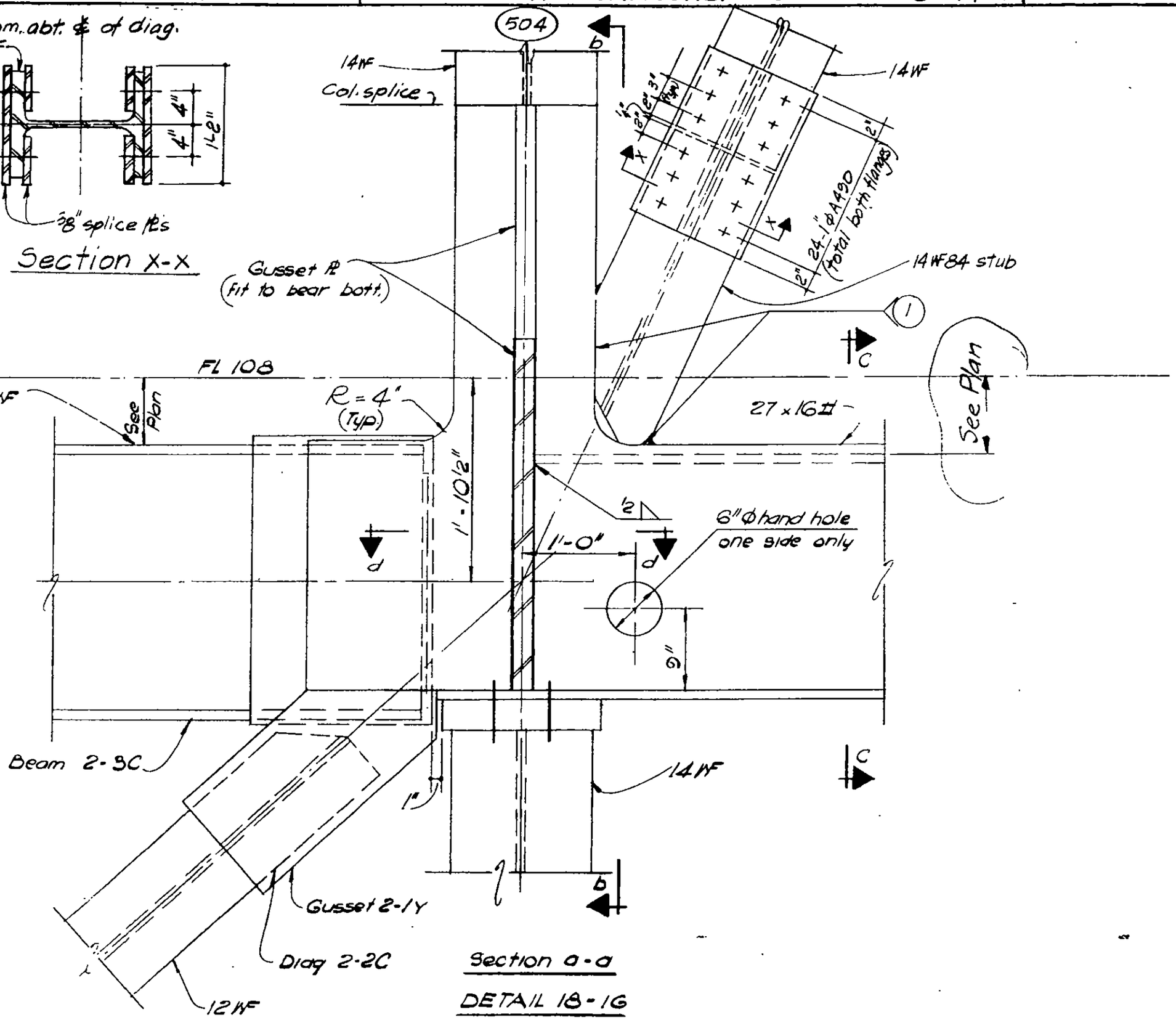

Section a-a

DETAIL 18-16

LICENSED PROFESSIONAL ENGINEER
LESLIE E. ROBERTSON
No. 34360
UNIVERSITY OF THE STATE OF NEW YORK

DESIGNED A. Vass
DRAWN W Clarke
REVIEWED E. Drakos

9-AB18-1.9

SKILLING, HELLE, CHRISTIANSEN, ROBERTSON — Structural & Civil Engineers

PROJECT: THE WORLD TRADE CENTER | TITLE: FL 107 - PH CONNECTION DETAILS - LINES 04&05 | DATE: 4-1-70

REVISIONS

5/27/70
7/8/70

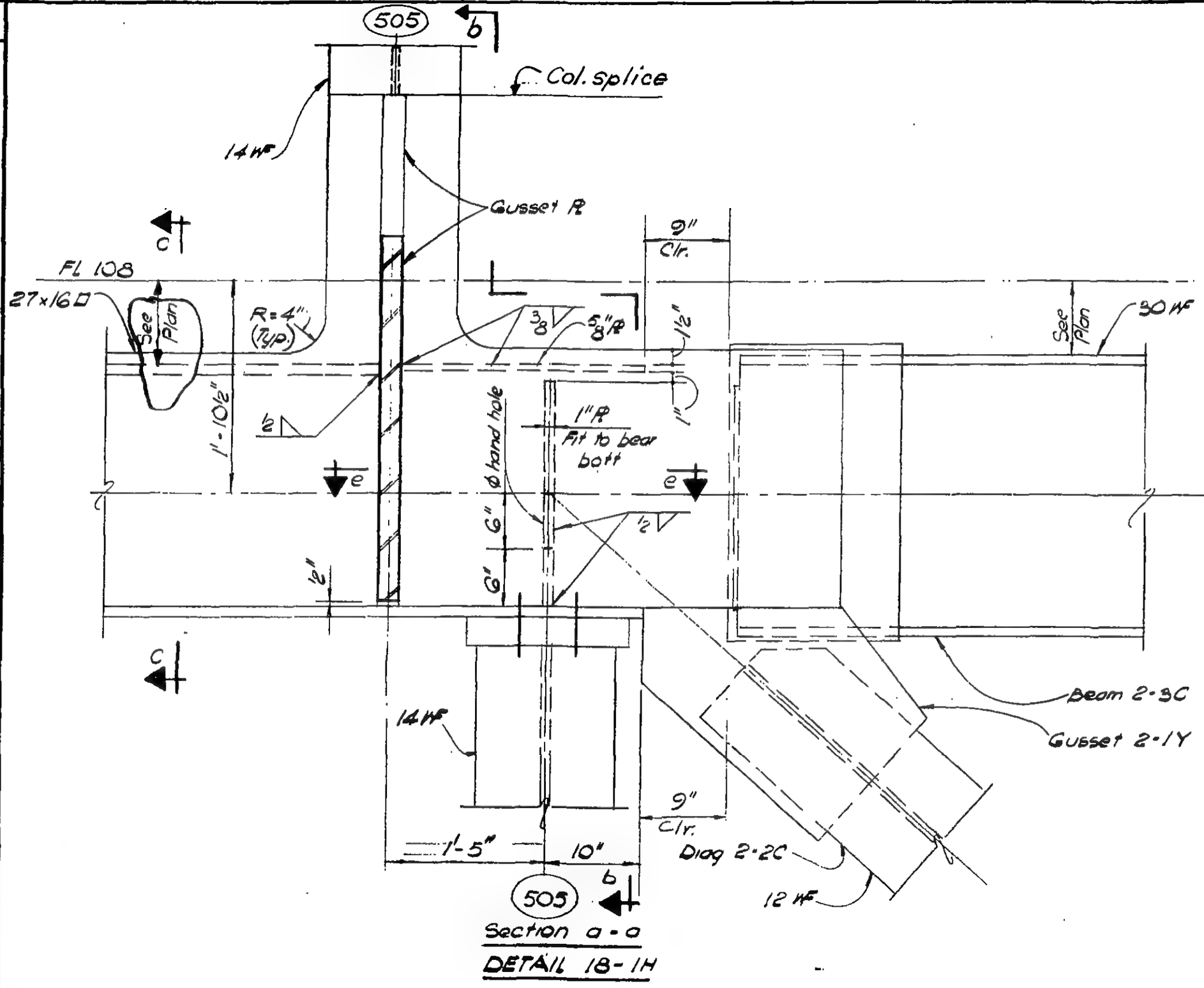

LICENSED PROFESSIONAL ENGINEER — LESLIE E. ROBERTSON — No. 34360 — UNIVERSITY OF THE STATE OF NEW YORK

DESIGNED: J. Vorr
DRAWN: W. Clarke
REVIEWED: E. Draxos

9-AB18-1.10

SKILLING, HELLE, CHRISTIANSEN, ROBERTSON — Structural & Civil Engineers

PROJECT: THE WORLD TRADE CENTER | TITLE: FL 107 - PH. CONNECTION DETAILS - LINES 04 & 05 | DATE: 4-1-70

REVISIONS

5/27/70

8/3/70

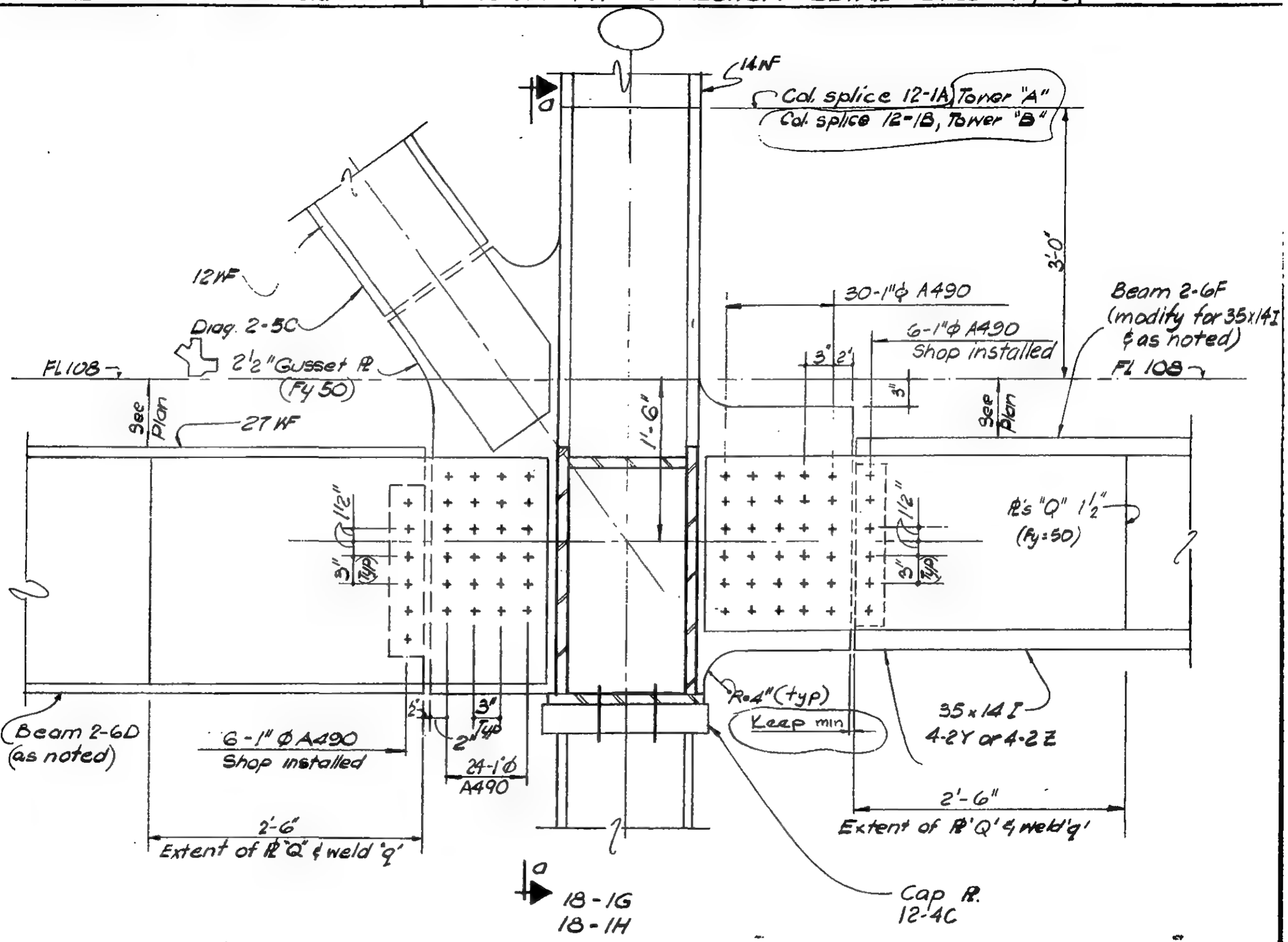

Section b-b

LICENSED PROFESSIONAL ENGINEER — LESLIE E. ROBERTSON — No. 34360 — UNIVERSITY OF THE STATE OF NEW YORK

DESIGNED N. Vour

DRAWN W. Clarke

REVIEWED E. Drakos

9-AB18-1.11

SKILLING, HELLE, CHRISTIANSEN, ROBERTSON — Structural & Civil Engineers

PROJECT: THE WORLD TRADE CENTER | TITLE: FL 107 - PH CONNECTION DETAILS - LINES 04 & 05 | DATE: 4-1-70

REVISIONS

5/27/70

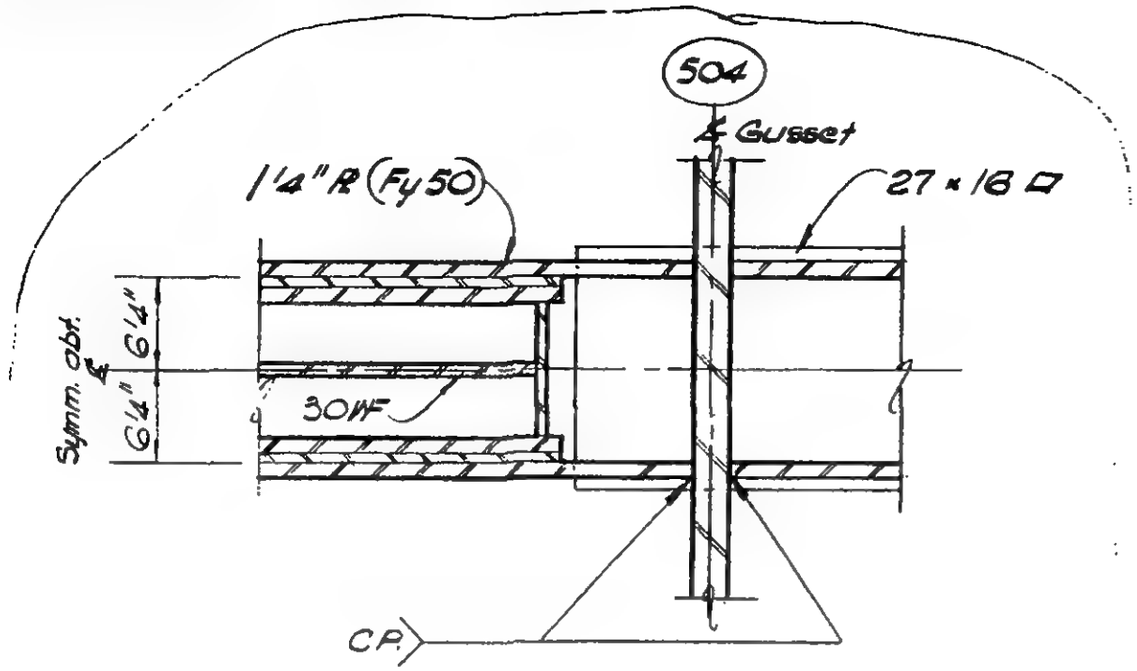

Section d-d

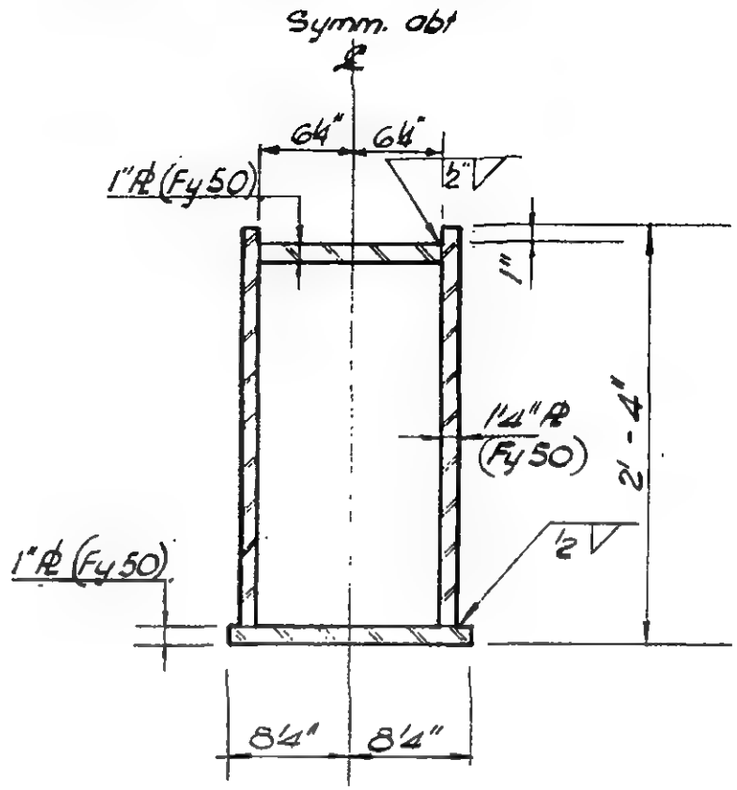

Section c-c
(27 x 16 □)

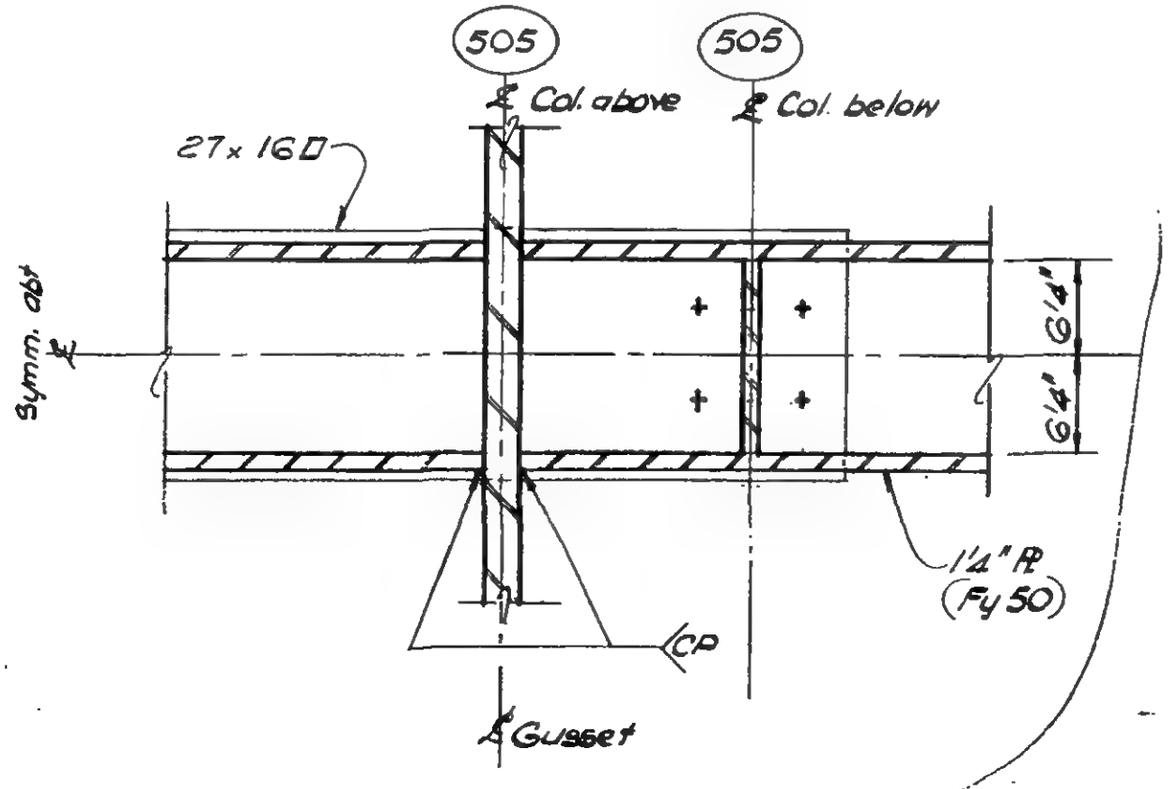

Section e-e

LICENSED PROFESSIONAL ENGINEER
LESLIE E. ROBERTSON
No. 34360
UNIVERSITY OF THE STATE OF NEW YORK

DESIGNED N. Vday
DRAWN W. Clarke
REVIEWED E. Drakos

9-AB10-1.12

SKILLING, HELLE, CHRISTIANSEN, ROBERTSON — Structural & Civil Engineers

PROJECT: THE WORLD TRADE CENTER | TITLE: FLOOR 107-PH CONNECTION DETAILS-LINES 004 & 005 | DATE: 4-1-70

REVISIONS

6-16-70
12/14/70

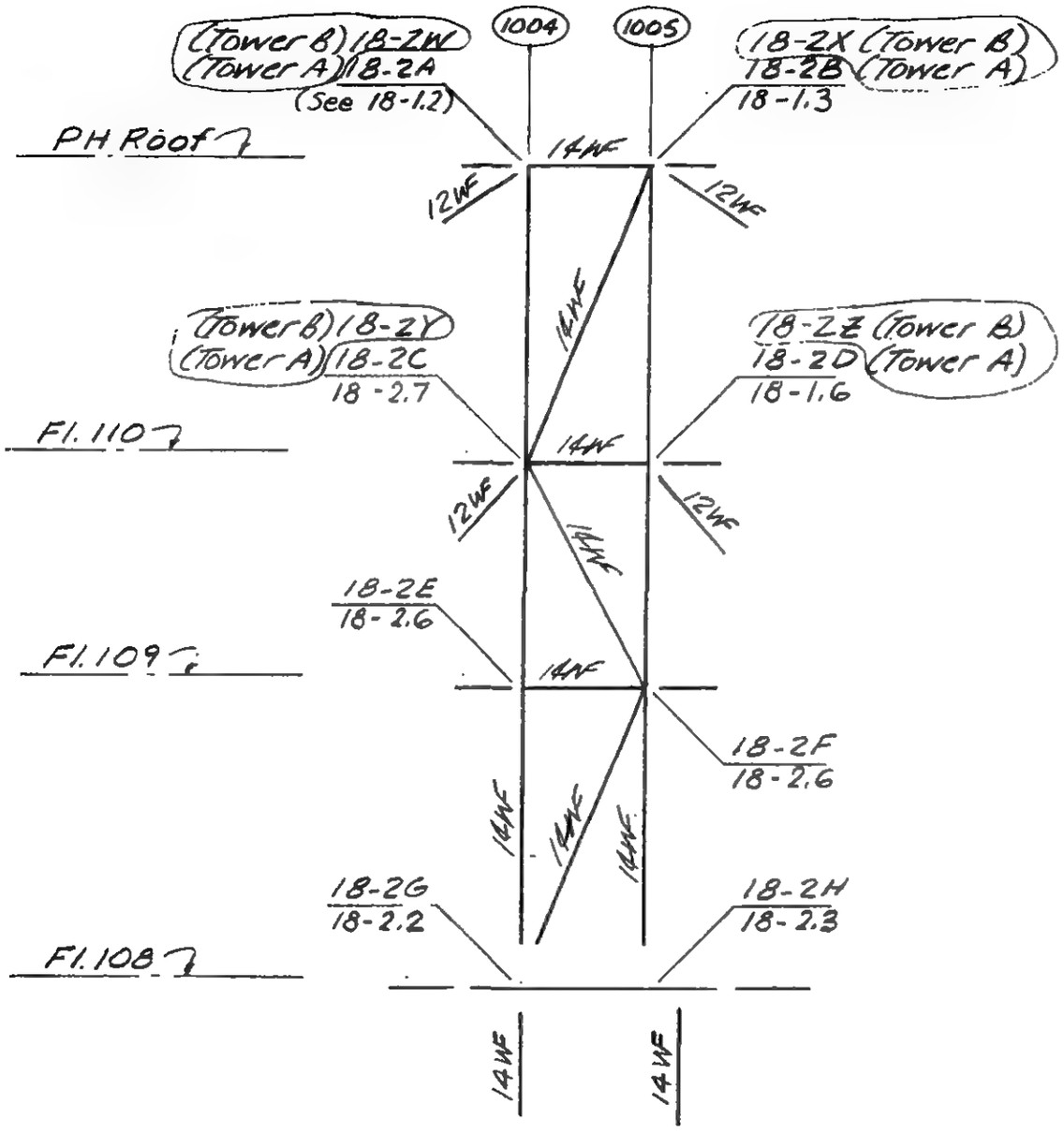

Detail 18-2

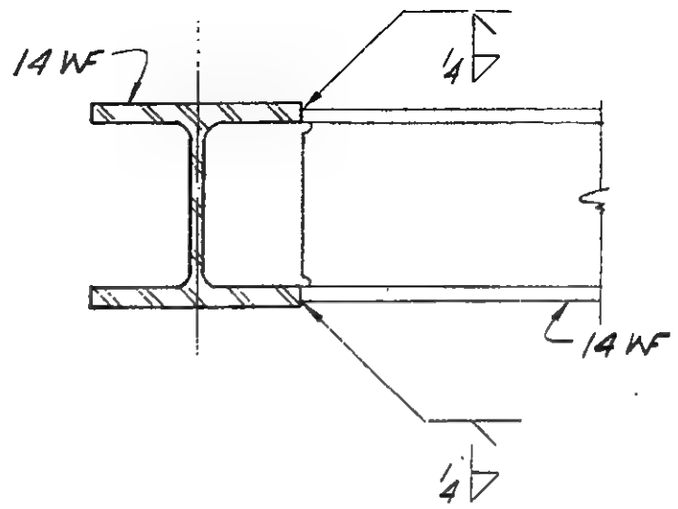

Detail 1

LICENSED PROFESSIONAL ENGINEER
LESLIE E. ROBERTSON
No. 34360
UNIVERSITY OF THE STATE OF NEW YORK

DESIGNED: H. Gos
DRAWN: J. Adams
REVIEWED: E. Drakos

9-AB18-2.1

SKILLING, HELLE, CHRISTIANSEN, ROBERTSON — Structural & Civil Engineers

PROJECT: THE WORLD TRADE CENTER | TITLE: FL 107 - PH CONNECTION DETAILS - LINES 04 & 05 | DATE: 5-27-70

REVISIONS

7/8/70

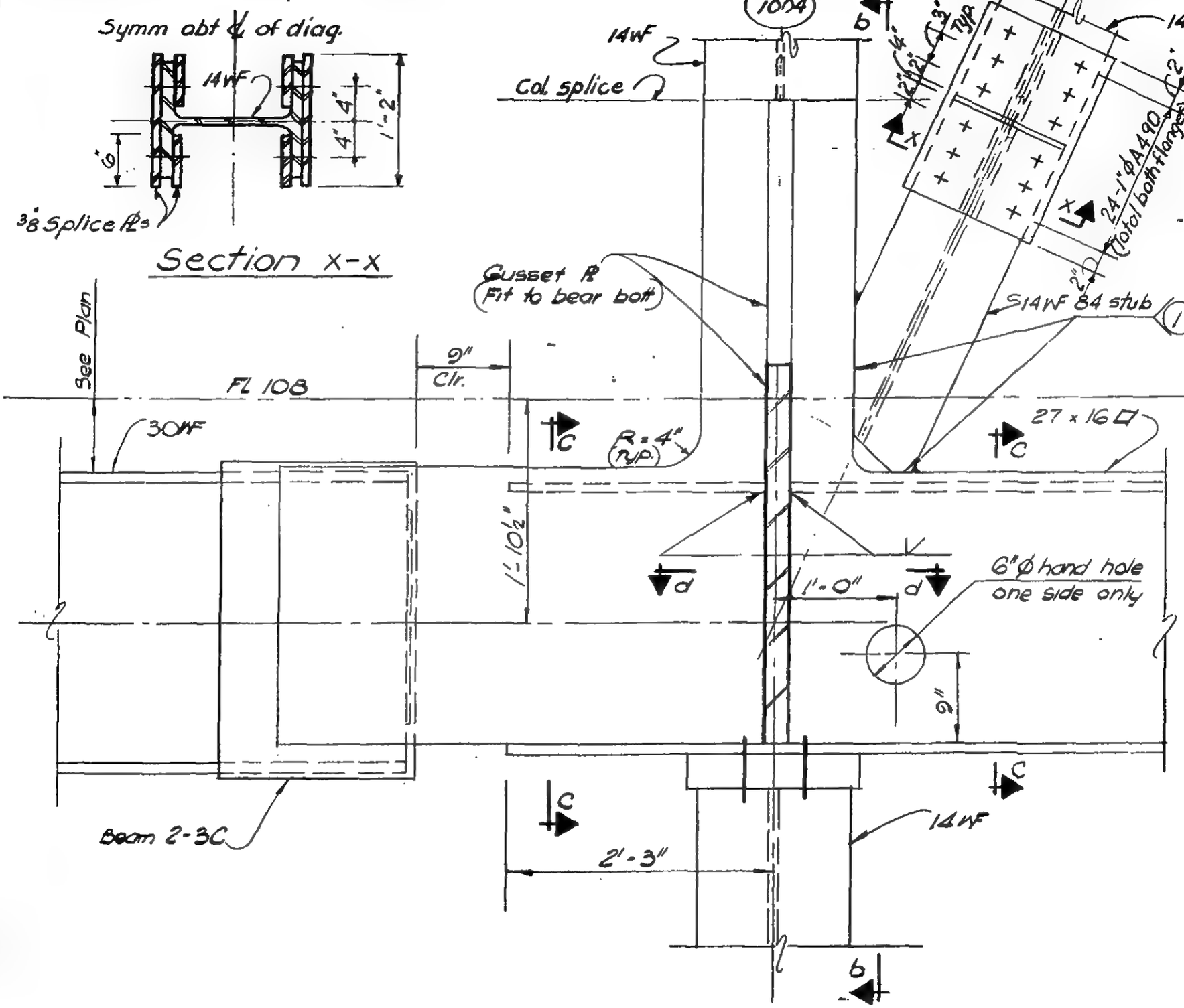

LICENSED PROFESSIONAL ENGINEER — LESLIE E. ROBERTSON — No. 34360 — UNIVERSITY OF THE STATE OF NEW YORK

DESIGNED: A. Voby

DRAWN: W. Clarke

REVIEWED: E. Draxos

9-AB18-2.2

SKILLING, HELLE, CHRISTIANSEN, ROBERTSON — Structural & Civil Engineers

PROJECT THE WORLD TRADE CENTER | TITLE FL 107-PH CONNECTION DETAILS-LINES 04&05 | DATE 5-27-70

REVISIONS

7/8/70

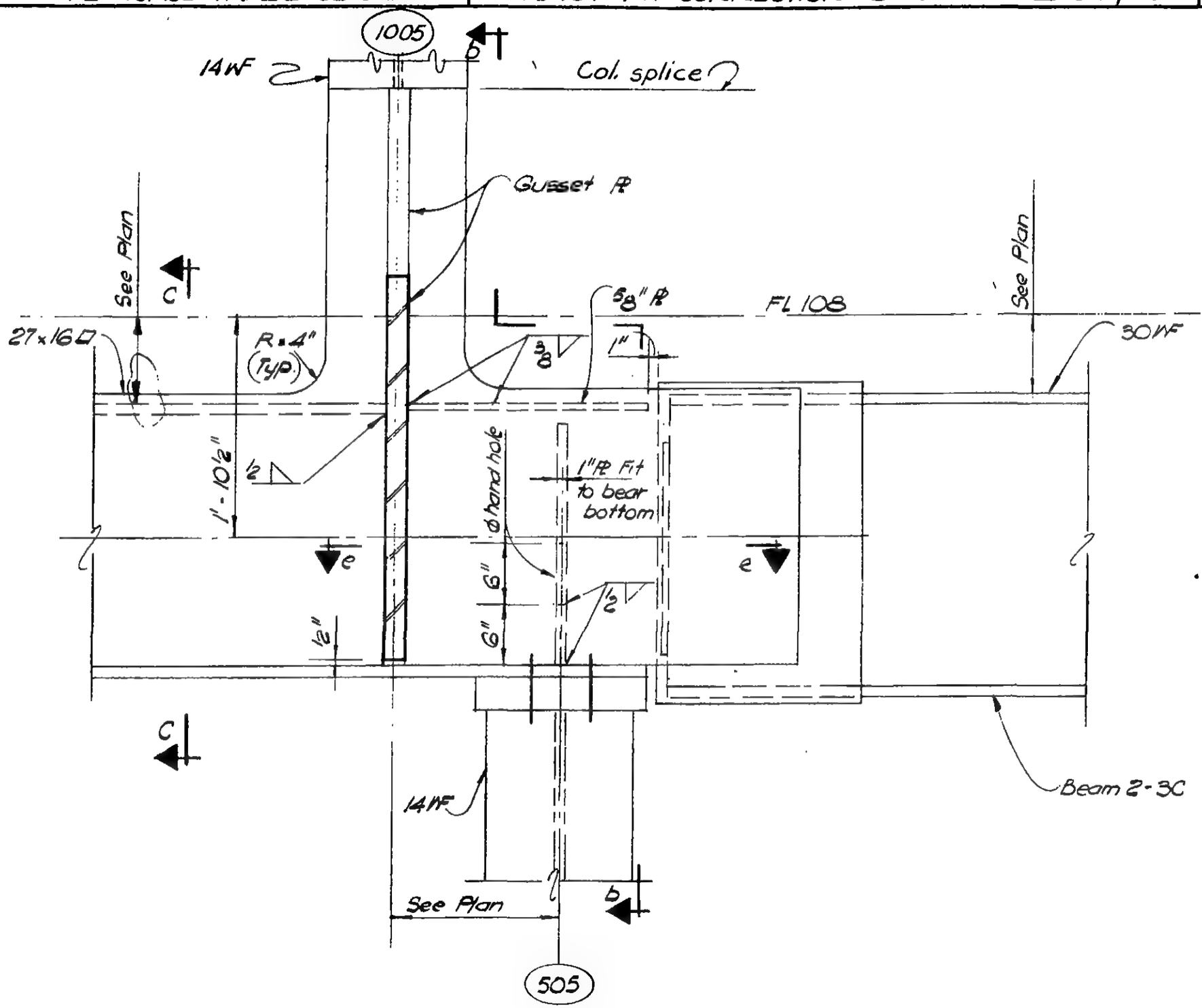

Section a-a

DETAIL 18-2H

LICENSED PROFESSIONAL ENGINEER
LESLIE E. ROBERTSON
No. 34360
UNIVERSITY OF THE STATE OF NEW YORK

DESIGNED A. Von

DRAWN M. Clarke

REVIEWED E. Drakos

9-AB18-2.3

SKILLING, HELLE, CHRISTIANSEN, ROBERTSON — Structural & Civil Engineers

PROJECT: THE WORLD TRADE CENTER | TITLE: FL 107 - PH CONNECTION DETAILS - LINES 04405 | DATE: 5-27-70

REVISIONS

7/8/70

8/3/70

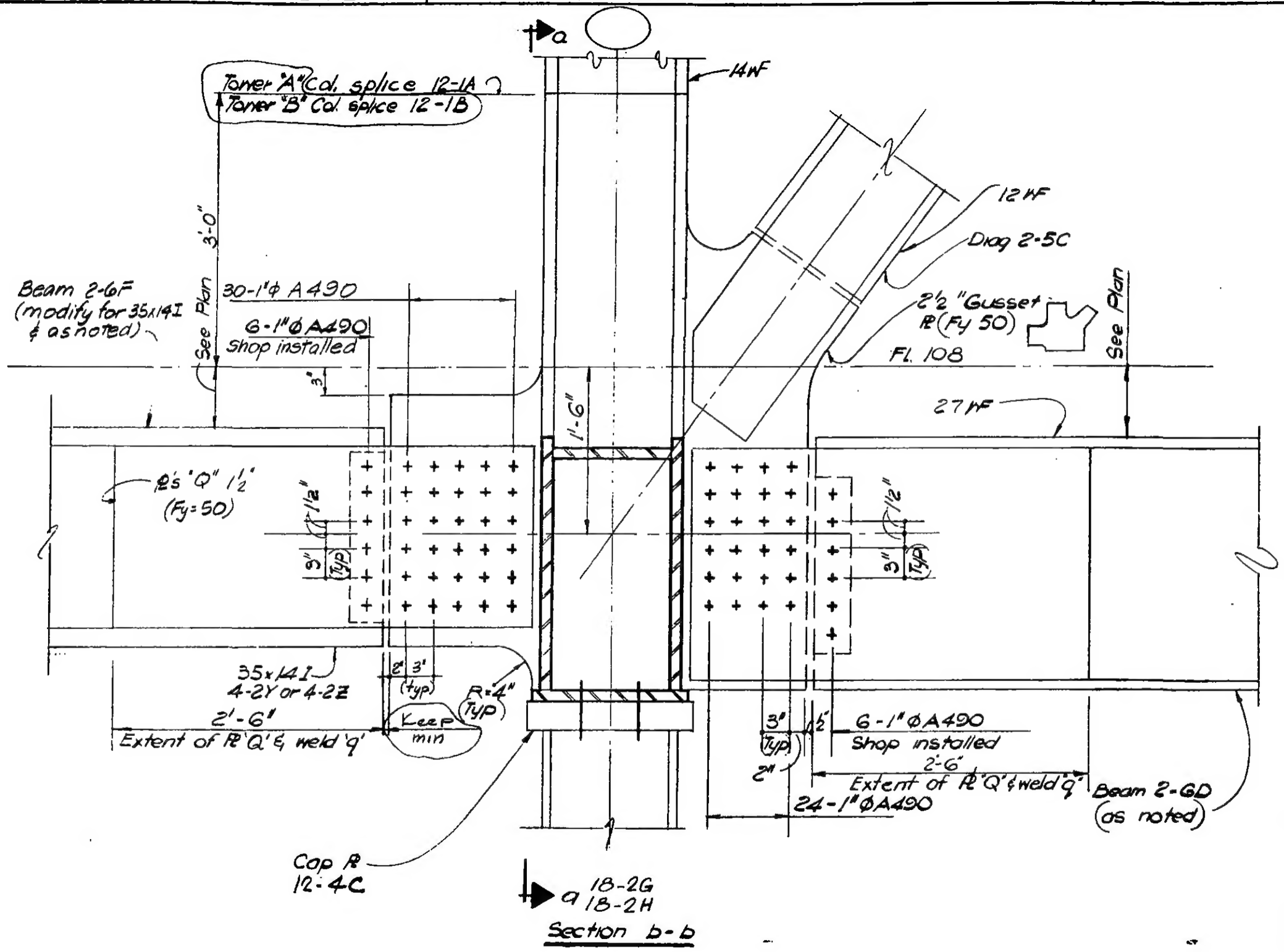

LICENSED PROFESSIONAL ENGINEER — LESLIE E. ROBERTSON — No. 34360 — UNIVERSITY OF THE STATE OF NEW YORK

DESIGNED: J. Vox

DRAWN: W. Clarke

REVIEWED: E. Drakos

9-AB18-2.4

SKILLING, HELLE, CHRISTIANSEN, ROBERTSON — Structural & Civil Engineers

PROJECT: THE WORLD TRADE CENTER | TITLE: FL 107 - PH CONNECTION DETAILS - LINES 04 & 05 | DATE: 5-27-70

REVISIONS

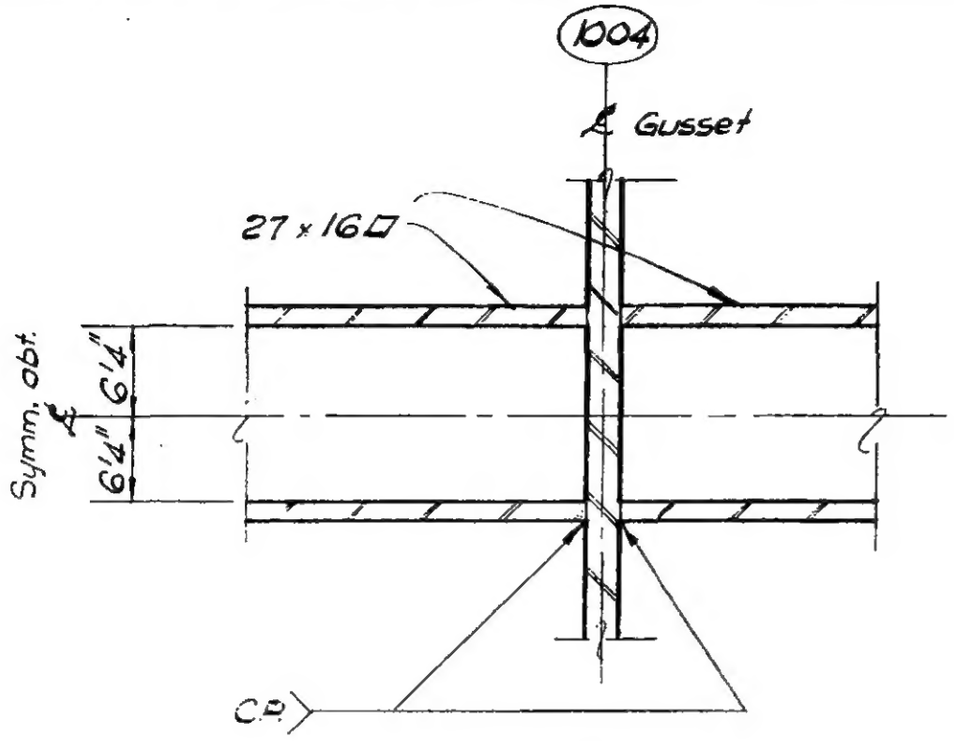

Section d-d

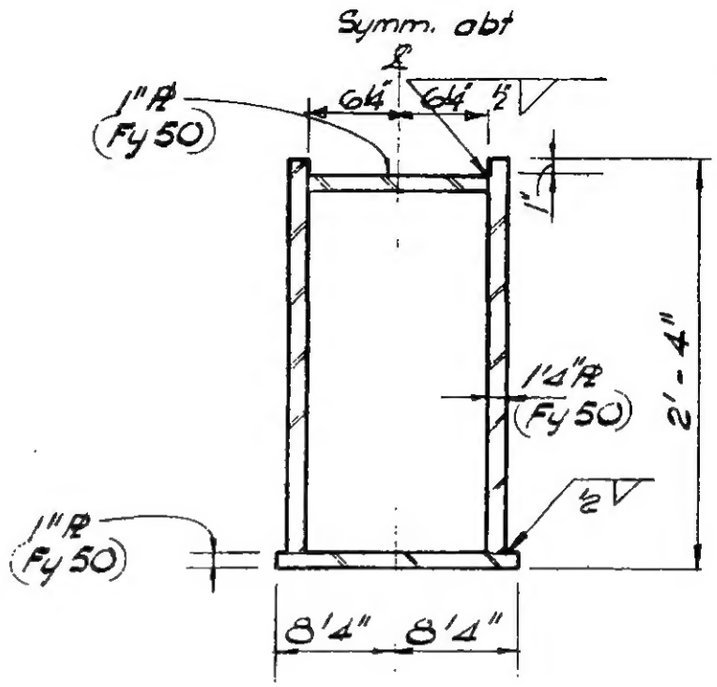

Section c-c
(27 x 16 □)

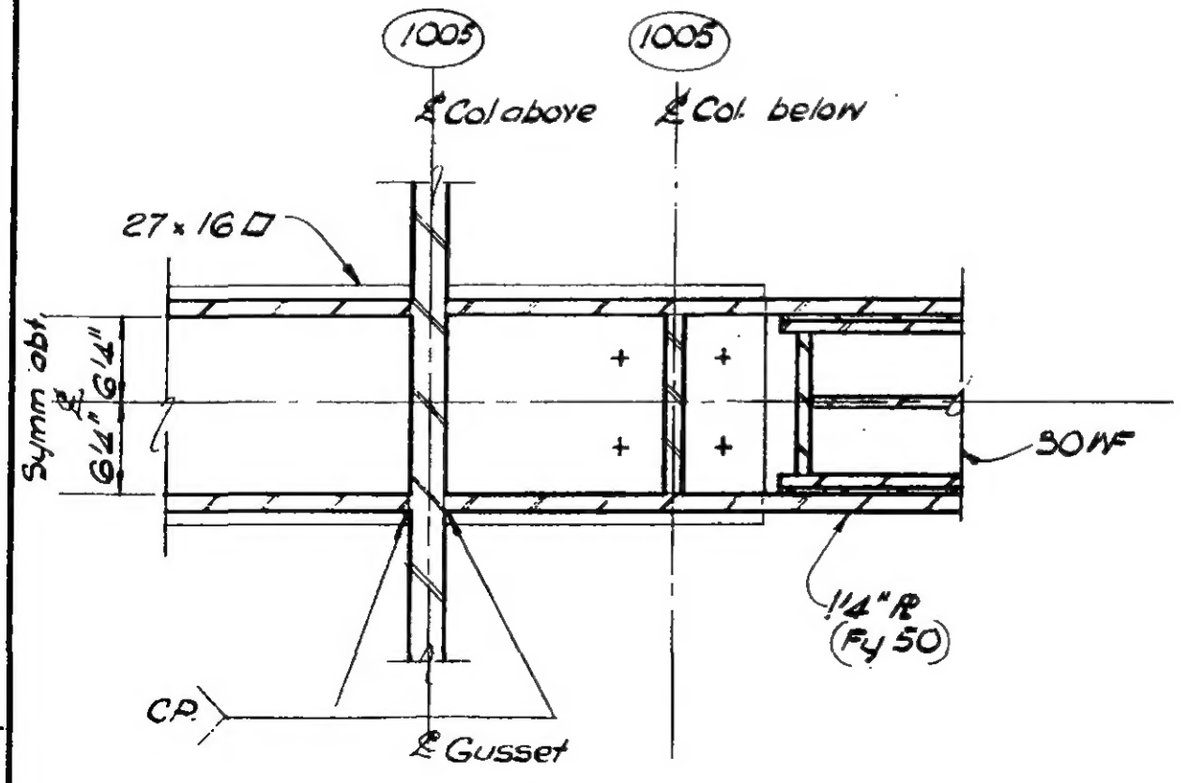

Section e-e

LICENSED PROFESSIONAL ENGINEER — LESLIE E. ROBERTSON — No. 34360 — UNIVERSITY OF THE STATE OF NEW YORK

DESIGNED: A. Von
DRAWN: W. Clarke
REVIEWED: E. Drakos

9 - AB18 - 2.5

SKILLING, HELLE, CHRISTIANSEN, ROBERTSON — Structural & Civil Engineers

PROJECT THE WORLD TRADE CENTER | TITLE FL 107 - PH CONNECTION DETAILS - LINES 004 & 005 | DATE 6-16-70

REVISIONS

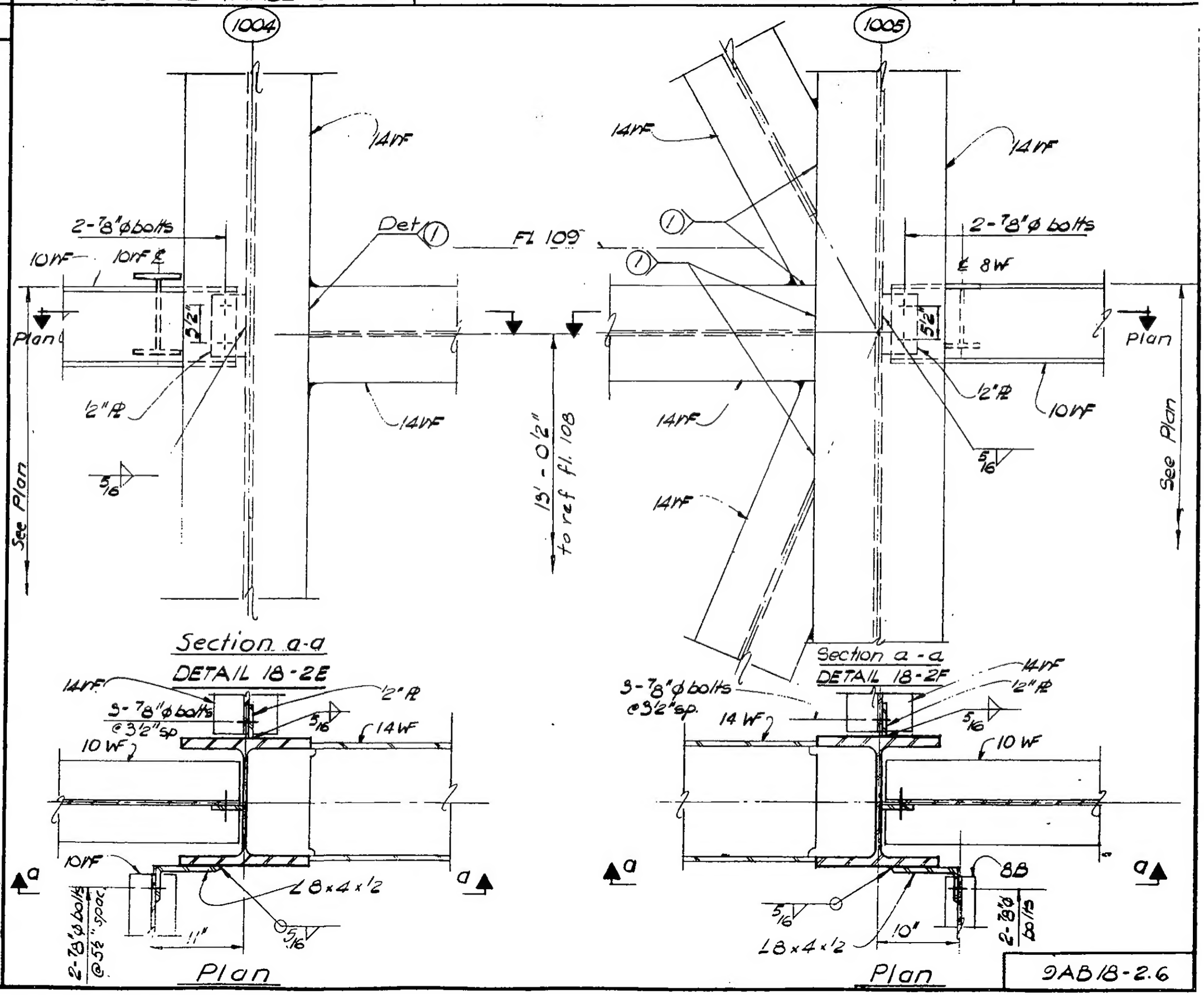

LICENSED PROFESSIONAL ENGINEER — LESLIE E. ROBERTSON — No. 34960 — UNIVERSITY OF THE STATE OF NEW YORK

DESIGNED H. boss

DRAWN W. Clarke

REVIEWED E. Drakos

9AB 18-2.6

SKILLING, HELLE, CHRISTIANSEN, ROBERTSON — Structural & Civil Engineers

PROJECT THE WORLD TRADE CENTER | TITLE FL 107 - PH CONNECTION DETAILS-LINES 004 & 005 | DATE 6-16-70

REVISIONS

12/14/70

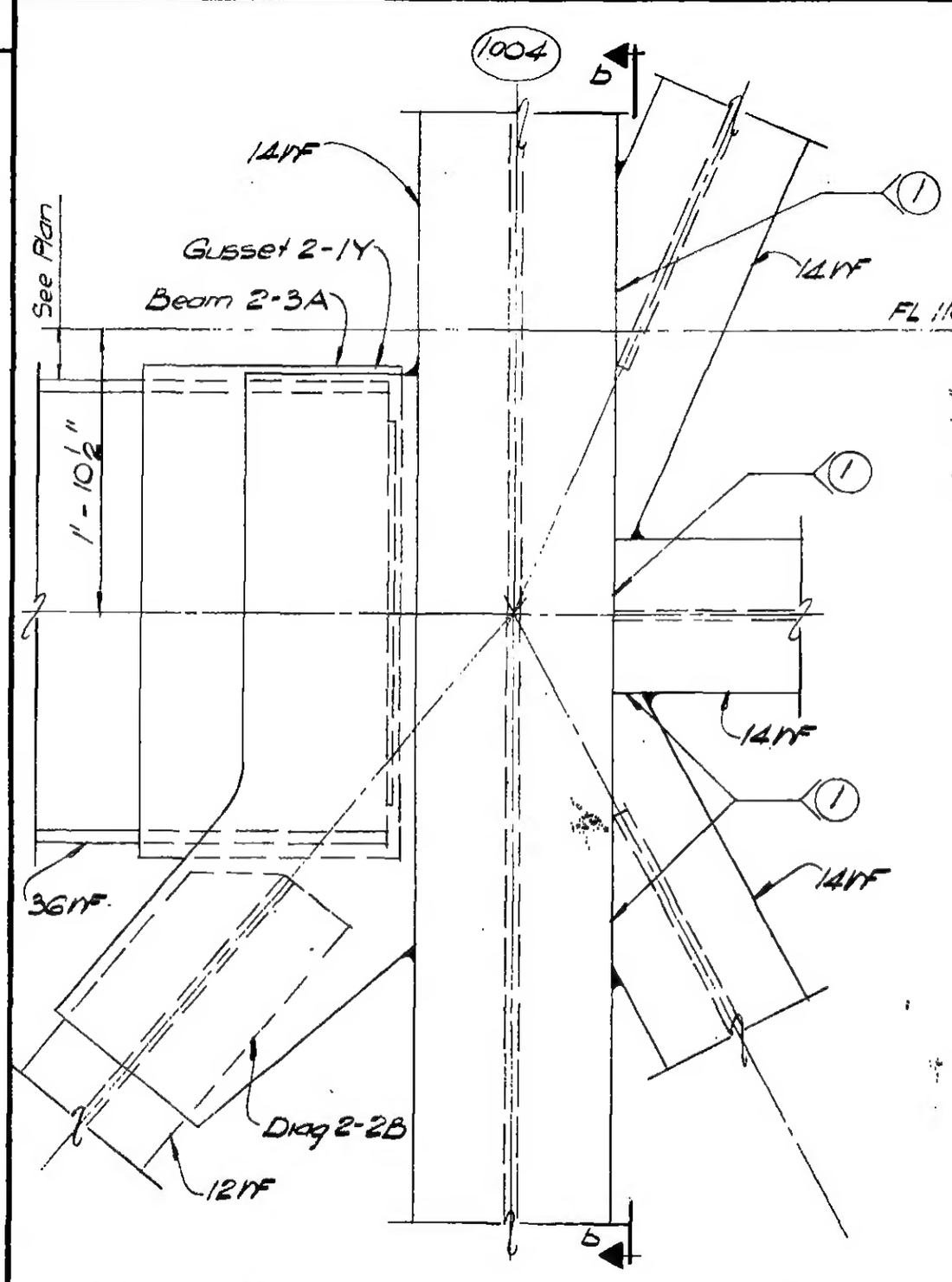

Section a - a

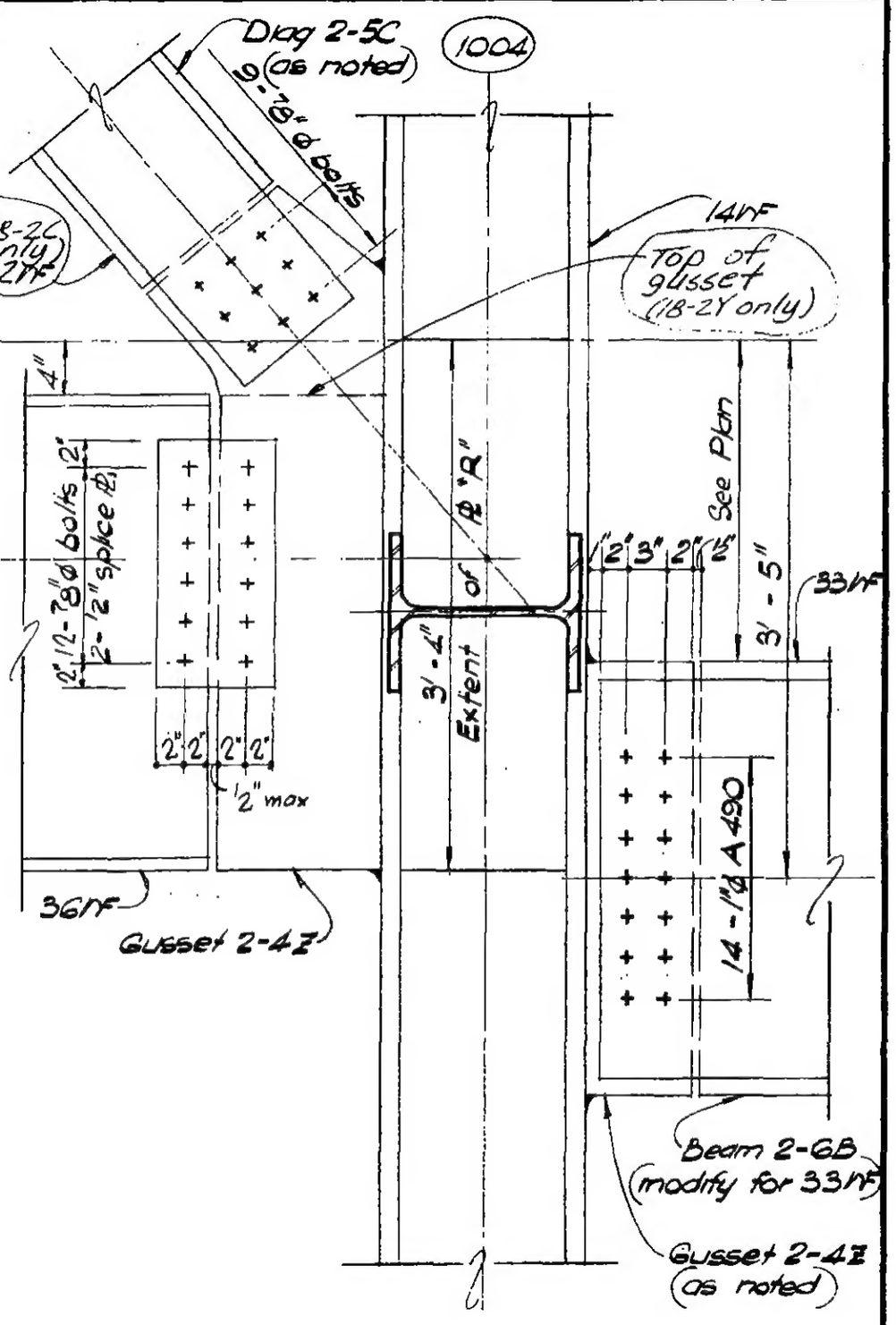

Section b-b

LICENSED PROFESSIONAL ENGINEER — LESLIE E. ROBERTSON — No 34360 — UNIVERSITY OF THE STATE OF NEW YORK

DESIGNED J. Gun

DRAWN W. Clarke

REVIEWED E. Ovakos

DETAIL 18 - 2C (& 18-2Y)

9-AB18-2.7